# Y379

+200° -20° | 39 NiCr | Aisi 304 | RoHS COMPLIANT

23

## DIN ISO 7379 - VIS ÉPAULÉE

Viti DIN 7379

**Matériaux :**

Y379:

Acier avec classe de résistance 12.9, non traité.

Y379 CIN:

Acier inox non traité (Aisi 304).

**Surface :**

Lisse.

**Couleur :**

Y379:

Brunie noir

Y379 CIN:

Naturelle.

**Usinage:**

Goupille à tige rectifiée (tolérance f9), partiellement filetée (tolérance 6g) à six pans creux.

**Demandes spéciales :**

Aucune.

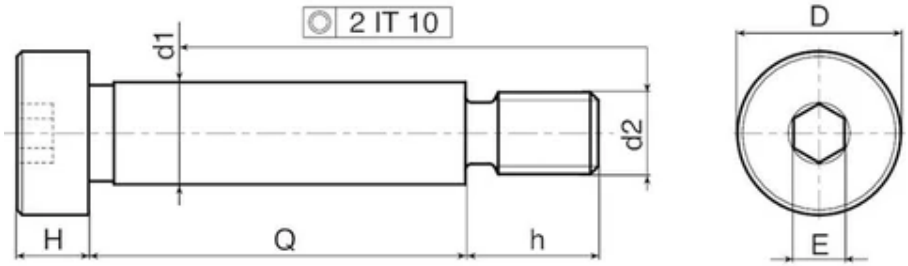


**Version Y379 - en acier bruni**

| Code | art. | D | d2\|6g\| | H | h | E | d1\|f9\| | Q | Poids (g) |
|---|---|---|---|---|---|---|---|---|---|
| Y37904.0006 | Y37904.SBM03X06 | 7 | M3 | 3 | 7 | 2 | 4 | 06 | 1,6 |
| Y37904.0007 | Y37904.SBM03X08 | 7 | M3 | 3 | 7 | 2 | 4 | 08 | 1,8 |
| Y37904.0008 | Y37904.SBM03X10 | 7 | M3 | 3 | 7 | 2 | 4 | 10 | 2 |
| Y37904.0009 | Y37904.SBM03X12 | 7 | M3 | 3 | 7 | 2 | 4 | 12 | 2,2 |
| Y37904.0010 | Y37904.SBM03X16 | 7 | M3 | 3 | 7 | 2 | 4 | 16 | 2,5 |
| Y37904.0011 | Y37904.SBM03X20 | 7 | M3 | 3 | 7 | 2 | 4 | 20 | 3 |
| Y37905.0007 | Y37905.SBM04X08 | 9 | M4 | 4 | 8 | 2,5 | 5 | 08 | 3,6 |
| Y37905.0008 | Y37905.SBM04X10 | 9 | M4 | 4 | 8 | 2,5 | 5 | 10 | 3,8 |
| Y37905.0009 | Y37905.SBM04X16 | 9 | M4 | 4 | 8 | 2,5 | 5 | 16 | 4,8 |
| Y37905.0010 | Y37905.SBM04X20 | 9 | M4 | 4 | 8 | 2,5 | 5 | 20 | 5,3 |
| Y37905.0011 | Y37905.SBM04X30 | 9 | M4 | 4 | 8 | 2,5 | 5 | 30 | 6,7 |
| Y37905.0012 | Y37905.SBM04X40 | 9 | M4 | 4 | 8 | 2,5 | 5 | 40 | 8,8 |
| Y37906.0007 | Y37906.SBM05X16 | 10 | M5 | 4,5 | 9,5 | 3 | 6 | 16 | 6,9 |
| Y37906.0008 | Y37906.SBM05X20 | 10 | M5 | 4,5 | 9,5 | 3 | 6 | 20 | 7,7 |
| Y37906.0009 | Y37906.SBM05X25 | 10 | M5 | 4,5 | 9,5 | 3 | 6 | 25 | 8,9 |
| Y37906.0010 | Y37906.SBM05X30 | 10 | M5 | 4,5 | 9,5 | 3 | 6 | 30 | 10 |
| Y37906.0011 | Y37906.SBM05X40 | 10 | M5 | 4,5 | 9,5 | 3 | 6 | 40 | 10,4 |
| Y37906.0012 | Y37906.SBM05X50 | 10 | M5 | 4,5 | 9,5 | 3 | 6 | 50 | 14 |
| Y37906.0013 | Y37906.SBM05X60 | 10 | M5 | 4,5 | 9,5 | 3 | 6 | 60 | 16.5 |
| Y37908.0008 | Y37908.SBM06X16 | 13 | M6 | 5,5 | 11 | 4 | 8 | 16 | 12,8 |
| Y37908.0009 | Y37908.SBM06X20 | 13 | M6 | 5,5 | 11 | 4 | 8 | 20 | 14,3 |

| Code | art. | D | d2\|6g\| | H | h | E | d1\|f9\| | Q | Poids (g) |
|---|---|---|---|---|---|---|---|---|---|
| Y37908.0010 | Y37908.SBM06X25 | 13 | M6 | 5,5 | 11 | 4 | 8 | 25 | 16,3 |
| Y37908.0011 | Y37908.SBM06X30 | 13 | M6 | 5,5 | 11 | 4 | 8 | 30 | 18 |
| Y37908.0012 | Y37908.SBM06X40 | 13 | M6 | 5,5 | 11 | 4 | 8 | 40 | 22 |
| Y37908.0013 | Y37908.SBM06X50 | 13 | M6 | 5,5 | 11 | 4 | 8 | 50 | 26 |
| Y37908.0014 | Y37908.SBM06X60 | 13 | M6 | 5,5 | 11 | 4 | 8 | 60 | 30 |
| Y37910.0010 | Y37910.SBM08X16 | 16 | M8 | 7 | 13 | 5 | 10 | 16 | 23 |
| Y37910.0011 | Y37910.SBM08X20 | 16 | M8 | 7 | 13 | 5 | 10 | 20 | 25 |
| Y37910.0012 | Y37910.SBM08X25 | 16 | M8 | 7 | 13 | 5 | 10 | 25 | 28 |
| Y37910.0013 | Y37910.SBM08X30 | 16 | M8 | 7 | 13 | 5 | 10 | 30 | 31 |
| Y37910.0014 | Y37910.SBM08X40 | 16 | M8 | 7 | 13 | 5 | 10 | 40 | 38 |
| Y37910.0015 | Y37910.SBM08X50 | 16 | M8 | 7 | 13 | 5 | 10 | 50 | 44 |
| Y37910.0016 | Y37910.SBM08X60 | 16 | M8 | 7 | 13 | 5 | 10 | 60 | 50 |
| Y37910.0017 | Y37910.SBM08X70 | 16 | M8 | 7 | 13 | 5 | 10 | 70 | 56 |
| Y37910.0018 | Y37910.SBM08X80 | 16 | M8 | 7 | 13 | 5 | 10 | 80 | 62 |
| Y37912.0013 | Y37912.SBM10X16 | 18 | M10 | 9 | 16 | 6 | 12 | 16 | 36 |
| Y37912.0014 | Y37912.SBM10X20 | 18 | M10 | 9 | 16 | 6 | 12 | 20 | 40 |
| Y37912.0015 | Y37912.SBM10X25 | 18 | M10 | 9 | 16 | 6 | 12 | 25 | 45 |
| Y37912.0016 | Y37912.SBM10X30 | 18 | M10 | 9 | 16 | 6 | 12 | 30 | 50 |
| Y37912.0017 | Y37912.SBM10X40 | 18 | M10 | 9 | 16 | 6 | 12 | 40 | 55 |
| Y37912.0018 | Y37912.SBM10X50 | 18 | M10 | 9 | 16 | 6 | 12 | 50 | 65 |
| Y37912.0019 | Y37912.SBM10X60 | 18 | M10 | 9 | 16 | 6 | 12 | 60 | 75 |
| Y37912.0020 | Y37912.SBM10X70 | 18 | M10 | 9 | 16 | 6 | 12 | 70 | 85 |
| Y37912.0021 | Y37912.SBM10X80 | 18 | M10 | 9 | 16 | 6 | 12 | 80 | 93 |
| Y37912.0022 | Y37912.SBM10X90 | 18 | M10 | 9 | 16 | 6 | 12 | 90 | 102 |
| Y37912.0012 | Y37912.SBM10X100 | 18 | M10 | 9 | 16 | 6 | 12 | 100 | 112 |
| Y37916.0012 | Y37916.SBM12X30 | 24 | M12 | 11 | 18 | 8 | 16 | 30 | 92 |
| Y37916.0013 | Y37916.SBM12X40 | 24 | M12 | 11 | 18 | 8 | 16 | 40 | 108 |
| Y37916.0014 | Y37916.SBM12X50 | 24 | M12 | 11 | 18 | 8 | 16 | 50 | 124 |
| Y37916.0015 | Y37916.SBM12X60 | 24 | M12 | 11 | 18 | 8 | 16 | 60 | 140 |
| Y37916.0016 | Y37916.SBM12X70 | 24 | M12 | 11 | 18 | 8 | 16 | 70 | 156 |
| Y37916.0017 | Y37916.SBM12X80 | 24 | M12 | 11 | 18 | 8 | 16 | 80 | 171 |
| Y37916.0018 | Y37916.SBM12X90 | 24 | M12 | 11 | 18 | 8 | 16 | 90 | 186 |
| Y37916.0010 | Y37916.SBM12X100 | 24 | M12 | 11 | 18 | 8 | 16 | 100 | 203 |
| Y37916.0011 | Y37916.SBM12X120 | 24 | M12 | 11 | 18 | 8 | 16 | 120 | 233 |
| Y37920.0012 | Y37920.SBM16X30 | 30 | M16 | 14 | 22 | 10 | 20 | 30 | 167 |
| Y37920.0013 | Y37920.SBM16X40 | 30 | M16 | 14 | 22 | 10 | 20 | 40 | 193 |
| Y37920.0014 | Y37920.SBM16X50 | 30 | M16 | 14 | 22 | 10 | 20 | 50 | 218 |
| Y37920.0015 | Y37920.SBM16X60 | 30 | M16 | 14 | 22 | 10 | 20 | 60 | 242 |
| Y37920.0016 | Y37920.SBM16X70 | 30 | M16 | 14 | 22 | 10 | 20 | 70 | 266 |
| Y37920.0017 | Y37920.SBM16X80 | 30 | M16 | 14 | 22 | 10 | 20 | 80 | 290 |

| Code | art. | D | d2\|6g\| | H | h | E | d1\|f9\| | Q | Poids (g) |
|---|---|---|---|---|---|---|---|---|---|
| Y37920.0018 | Y37920.SBM16X90 | 30 | M16 | 14 | 22 | 10 | 20 | 90 | 315 |
| Y37920.0010 | Y37920.SBM16X100 | 30 | M16 | 14 | 22 | 10 | 20 | 100 | 340 |
| Y37920.0011 | Y37920.SBM16X120 | 30 | M16 | 14 | 22 | 10 | 20 | 120 | 389 |

**Version Y379 CIN - en acier inox (Aisi 304)**

| Code | art. | D | d2\|6g\| | H | h | E | d1\|f9\| | Q | Poids (g) |
|---|---|---|---|---|---|---|---|---|---|
| Y37904.0001 | Y37904.INM03X06CIN | 7 | M3 | 3 | 7 | 2 | 4 | 06 | 1,6 |
| Y37904.0002 | Y37904.INM03X08CIN | 7 | M3 | 3 | 7 | 2 | 4 | 08 | 1,8 |
| Y37904.0003 | Y37904.INM03X10CIN | 7 | M3 | 3 | 7 | 2 | 4 | 10 | 2 |
| Y37904.0004 | Y37904.INM03X16CIN | 7 | M3 | 3 | 7 | 2 | 4 | 16 | 2,2 |
| Y37904.0005 | Y37904.INM03X20CIN | 7 | M3 | 3 | 7 | 2 | 4 | 20 | 2,5 |
| Y37905.0001 | Y37905.INM04X08CIN | 9 | M4 | 4 | 8 | 2,5 | 5 | 08 | 3,6 |
| Y37905.0002 | Y37905.INM04X10CIN | 9 | M4 | 4 | 8 | 2,5 | 5 | 10 | 3,8 |
| Y37905.0003 | Y37905.INM04X16CIN | 9 | M4 | 4 | 8 | 2,5 | 5 | 16 | 4,8 |
| Y37905.0004 | Y37905.INM04X20CIN | 9 | M4 | 4 | 8 | 2,5 | 5 | 20 | 5,3 |
| Y37905.0005 | Y37905.INM04X30CIN | 9 | M4 | 4 | 8 | 2,5 | 5 | 30 | 6,7 |
| Y37905.0006 | Y37905.INM04X40CIN | 9 | M4 | 4 | 8 | 2,5 | 5 | 40 | 8,8 |
| Y37906.0001 | Y37906.INM05X16CIN | 10 | M5 | 4,5 | 9,5 | 3 | 6 | 16 | 6,9 |
| Y37906.0002 | Y37906.INM05X20CIN | 10 | M5 | 4,5 | 9,5 | 3 | 6 | 20 | 7,7 |
| - | Y37906.INM05X25CIN | 10 | M5 | 4,5 | 9,5 | 3 | 6 | 25 | 8,9 |
| Y37906.0003 | Y37906.INM05X30CIN | 10 | M5 | 4,5 | 9,5 | 3 | 6 | 30 | 10 |
| Y37906.0004 | Y37906.INM05X40CIN | 10 | M5 | 4,5 | 9,5 | 3 | 6 | 40 | 10,4 |
| Y37906.0005 | Y37906.INM05X50CIN | 10 | M5 | 4,5 | 9,5 | 3 | 6 | 50 | 14 |
| Y37906.0006 | Y37906.INM05X60CIN | 10 | M5 | 4,5 | 9,5 | 3 | 6 | 60 | 16.5 |
| Y37908.0001 | Y37908.INM06X16CIN | 13 | M6 | 5,5 | 11 | 4 | 8 | 16 | 12,8 |
| Y37908.0002 | Y37908.INM06X20CIN | 13 | M6 | 5,5 | 11 | 4 | 8 | 20 | 14,3 |
| Y37908.0003 | Y37908.INM06X25CIN | 13 | M6 | 5,5 | 11 | 4 | 8 | 25 | 16,3 |
| Y37908.0004 | Y37908.INM06X30CIN | 13 | M6 | 5,5 | 11 | 4 | 8 | 30 | 18 |
| Y37908.0005 | Y37908.INM06X40CIN | 13 | M6 | 5,5 | 11 | 4 | 8 | 40 | 22 |
| Y37908.0006 | Y37908.INM06X50CIN | 13 | M6 | 5,5 | 11 | 4 | 8 | 50 | 26 |
| Y37908.0007 | Y37908.INM06X60CIN | 13 | M6 | 5,5 | 11 | 4 | 8 | 60 | 30 |
| Y37910.0001 | Y37910.INM08X16CIN | 16 | M8 | 7 | 13 | 5 | 10 | 16 | 23 |
| Y37910.0002 | Y37910.INM08X20CIN | 16 | M8 | 7 | 13 | 5 | 10 | 20 | 25 |
| Y37910.0003 | Y37910.INM08X25CIN | 16 | M8 | 7 | 13 | 5 | 10 | 25 | 28 |
| Y37910.0004 | Y37910.INM08X30CIN | 16 | M8 | 7 | 13 | 5 | 10 | 30 | 31 |
| Y37910.0005 | Y37910.INM08X40CIN | 16 | M8 | 7 | 13 | 5 | 10 | 40 | 38 |
| Y37910.0006 | Y37910.INM08X50CIN | 16 | M8 | 7 | 13 | 5 | 10 | 50 | 44 |
| Y37910.0007 | Y37910.INM08X60CIN | 16 | M8 | 7 | 13 | 5 | 10 | 60 | 50 |
| Y37910.0008 | Y37910.INM08X70CIN | 16 | M8 | 7 | 13 | 5 | 10 | 70 | 56 |
| Y37910.0009 | Y37910.INM08X80CIN | 16 | M8 | 7 | 13 | 5 | 10 | 80 | 62 |

| Code | art. | D | d2\|6g\| | H | h | E | d1\|f9\| | Q | Poids (g) |
|---|---|---|---|---|---|---|---|---|---|
| Y37912.0002 | Y37912.INM10X16CIN | 18 | M10 | 9 | 16 | 6 | 12 | 16 | 36 |
| Y37912.0003 | Y37912.INM10X20CIN | 18 | M10 | 9 | 16 | 6 | 12 | 20 | 40 |
| Y37912.0004 | Y37912.INM10X25CIN | 18 | M10 | 9 | 16 | 6 | 12 | 25 | 45 |
| Y37912.0005 | Y37912.INM10X30CIN | 18 | M10 | 9 | 16 | 6 | 12 | 30 | 50 |
| Y37912.0006 | Y37912.INM10X40CIN | 18 | M10 | 9 | 16 | 6 | 12 | 40 | 55 |
| Y37912.0007 | Y37912.INM10X50CIN | 18 | M10 | 9 | 16 | 6 | 12 | 50 | 65 |
| Y37912.0008 | Y37912.INM10X60CIN | 18 | M10 | 9 | 16 | 6 | 12 | 60 | 75 |
| Y37912.0009 | Y37912.INM10X70CIN | 18 | M10 | 9 | 16 | 6 | 12 | 70 | 85 |
| Y37912.0010 | Y37912.INM10X80CIN | 18 | M10 | 9 | 16 | 6 | 12 | 80 | 93 |
| Y37912.0011 | Y37912.INM10X90CIN | 18 | M10 | 9 | 16 | 6 | 12 | 90 | 102 |
| Y37912.0001 | Y37912.INM10X100CIN | 18 | M10 | 9 | 16 | 6 | 12 | 100 | 112 |
| Y37916.0003 | Y37916.INM12X30CIN | 24 | M12 | 11 | 18 | 8 | 16 | 30 | 92 |
| Y37916.0004 | Y37916.INM12X40CIN | 24 | M12 | 11 | 18 | 8 | 16 | 40 | 108 |
| Y37916.0005 | Y37916.INM12X50CIN | 24 | M12 | 11 | 18 | 8 | 16 | 50 | 124 |
| Y37916.0006 | Y37916.INM12X60CIN | 24 | M12 | 11 | 18 | 8 | 16 | 60 | 140 |
| Y37916.0007 | Y37916.INM12X70CIN | 24 | M12 | 11 | 18 | 8 | 16 | 70 | 156 |
| Y37916.0008 | Y37916.INM12X80CIN | 24 | M12 | 11 | 18 | 8 | 16 | 80 | 171 |
| Y37916.0009 | Y37916.INM12X90CIN | 24 | M12 | 11 | 18 | 8 | 16 | 90 | 186 |
| Y37916.0001 | Y37916.INM12X100CIN | 24 | M12 | 11 | 18 | 8 | 16 | 100 | 203 |
| Y37916.0002 | Y37916.INM12X120CIN | 24 | M12 | 11 | 18 | 8 | 16 | 120 | 233 |
| Y37920.0003 | Y37920.INM16X30CIN | 30 | M16 | 14 | 22 | 10 | 20 | 30 | 167 |
| Y37920.0004 | Y37920.INM16X40CIN | 30 | M16 | 14 | 22 | 10 | 20 | 40 | 193 |
| Y37920.0005 | Y37920.INM16X50CIN | 30 | M16 | 14 | 22 | 10 | 20 | 50 | 218 |
| Y37920.0006 | Y37920.INM16X60CIN | 30 | M16 | 14 | 22 | 10 | 20 | 60 | 242 |
| Y37920.0007 | Y37920.INM16X70CIN | 30 | M16 | 14 | 22 | 10 | 20 | 70 | 266 |
| Y37920.0008 | Y37920.INM16X80CIN | 30 | M16 | 14 | 22 | 10 | 20 | 80 | 290 |
| Y37920.0009 | Y37920.INM16X90CIN | 30 | M16 | 14 | 22 | 10 | 20 | 90 | 315 |
| Y37920.0001 | Y37920.INM16X100CIN | 30 | M16 | 14 | 22 | 10 | 20 | 100 | 340 |
| Y37920.0002 | Y37920.INM16X120CIN | 30 | M16 | 14 | 22 | 10 | 20 | 120 | 389 |

# Y442

+200° -40° | AVP | RoHS COMPLIANT

23

## PIÈCE D'EXTRÉMITÉ À OEILLET EN ACIER

Componenti vari DIN

**Matériaux :**
Acier avec classe de résistance 5.8.

**Surface :**
Lisse (par tournage fin).

**Couleur :**
Brunissage standard.

**Trou :**
(d1) Trou fileté borgne réalisé dans la masse (tolérance filetage 6H).
(d2) Trou lisse passant réalisé dans la masse (tolérance trou H7).

**Demandes spéciales :**
Sur demande le produit peut être fourni zingué, (code : Y442018.VZM06 - attention : tolérance trou H9).

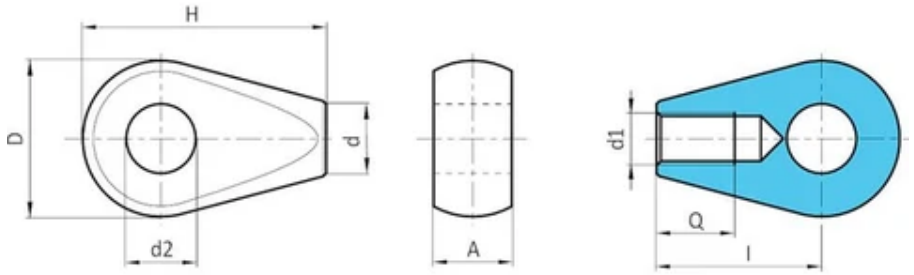


| Code | art. | D -0.3 | H | A -0,15 | l | d | d2 H7 | d1 6H | Q +1 | Poids (g) |
|---|---|---|---|---|---|---|---|---|---|---|
| Y44218.0001 | Y44218.SBM06 | 18 | 37 | 9 | 19 | 8,5 | 7,1 | M6 | 9 | 1,4 |

# Y508

+200° -20° | C40 | RoHS COMPLIANT

23

## DIN 508 - ÉCROU EN T POUR RAINURES EN ACIER

Volantini e Leve DIN

**Matériaux :**
Acier avec résistance à la traction de classe 8.

**Surface :**
Lisse.

**Couleur :**
Brunie.

**Trou :**
Trou fileté passant (tolérance filetage 6H).

**Demandes spéciales :**
Le produit peut être fourni zingué. Remplacer la partie de code "SBM" par "SZM".

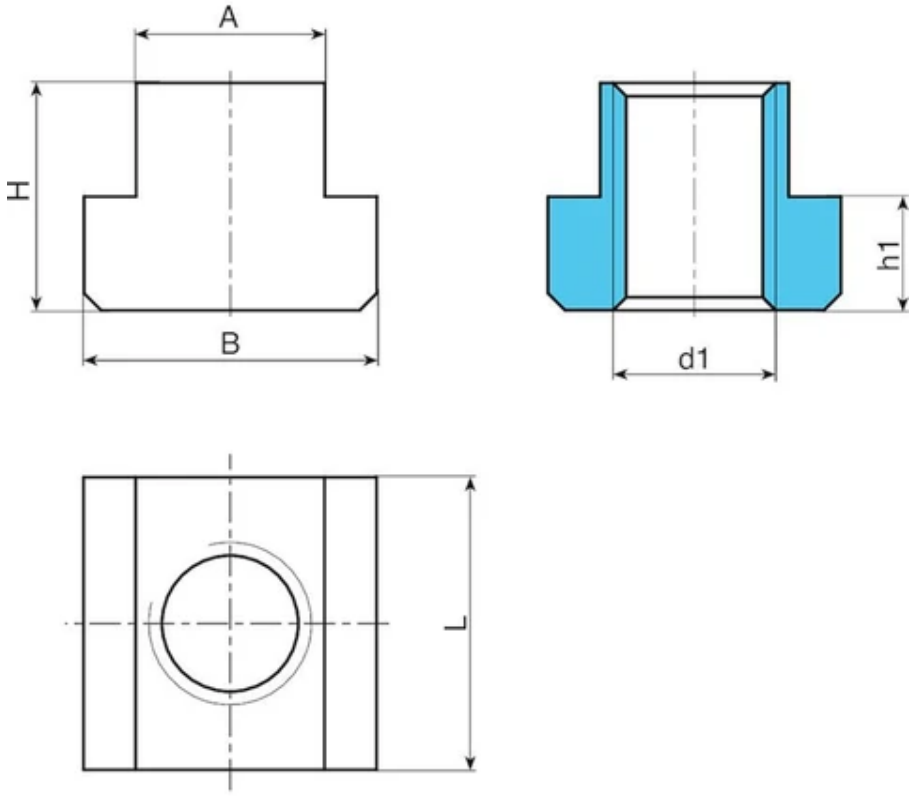


| Code | art. | A -0,3/+0,5 | B -0,5 | L -0,5 | h1 -0,5 | H | Rainure en T DIN508 | d1 6H | Poids (g) |
|---|---|---|---|---|---|---|---|---|---|
| Y508005.0001 | Y508005.SBM0408 | 5 | 9 | 9 | 3 | 5,5 | 5 | M4 | 2 |
| Y508006.0001 | Y508006.SBM0508 | 6 | 10 | 10 | 4 | 8 | 6 | M5 | 4 |
| Y508008.0001 | Y508008.SBM0608 | 8 | 13 | 13 | 6 | 10 | 8 | M6 | 8 |
| Y508010.0001 | Y508010.SBM0808 | 9,5 | 16 | 20 | 6,5 | 12 | 10 | M8 | 12 |

| Code | art. | A -0,3/+0,5 | B -0,5 | L -0,5 | h1 -0,5 | H | Rainure en T DIN508 | d1 6H | Poids (g) |
|---|---|---|---|---|---|---|---|---|---|
| Y508012.0001 | Y508012.SBM1008 | 12 | 19 | 22 | 6,5 | 12 | 12 | M10 | 20 |
| Y508014.0001 | Y508014.SBM1208 | 14 | 22 | 26 | 8 | 16 | 14 | M12 | 34 |
| Y508018.0001 | Y508018.SBM1608 | 18 | 28 | 30 | 10,5 | 20 | 18 | M16 | 62 |
| Y508022.0001 | Y508022.SBM2008 | 22 | 35 | 39 | 14,5 | 27 | 22 | M20 | 149 |
| Y508028.0001 | Y508028.SBM2408 | 27 | 41 | 42,5 | 17 | 33,5 | 28 | M24 | 314 |
| Y508036.0001 | Y508036.SBM3008 | 35 | 53 | 53 | 22,5 | 44 | 36 | M30 | 586 |

# Y631

+200° -20° | 39 NiCr | Aisi 303 | RoHS COMPLIANT

23

## DIN 6311 - FORME S - BASE EN ACIER AVEC BAGUE POUR PIVOTS DIN 6332

Piedi e perni di spinta DIN

**Matériaux :**

Y631:

Base en acier cimenté.

(1) Bague de blocage en acier à ressort.

Y631 CIN:

Base en acier inox (Aisi 303).

(1) Bague de blocage en acier inox (Aisi 302).

**Surface :**

Y631:

Cimentée.

Y631 CIN:

Naturelle, non traitée.

**Couleur :**

Y631:

Brunissage.

Y631 CIN:

Naturelle.

**Demandes spéciales :**

Sur demande et pour des quantités importantes, il est possible de fournir la base avec forme T surbaissée et avec une surface de fixation plus grande.

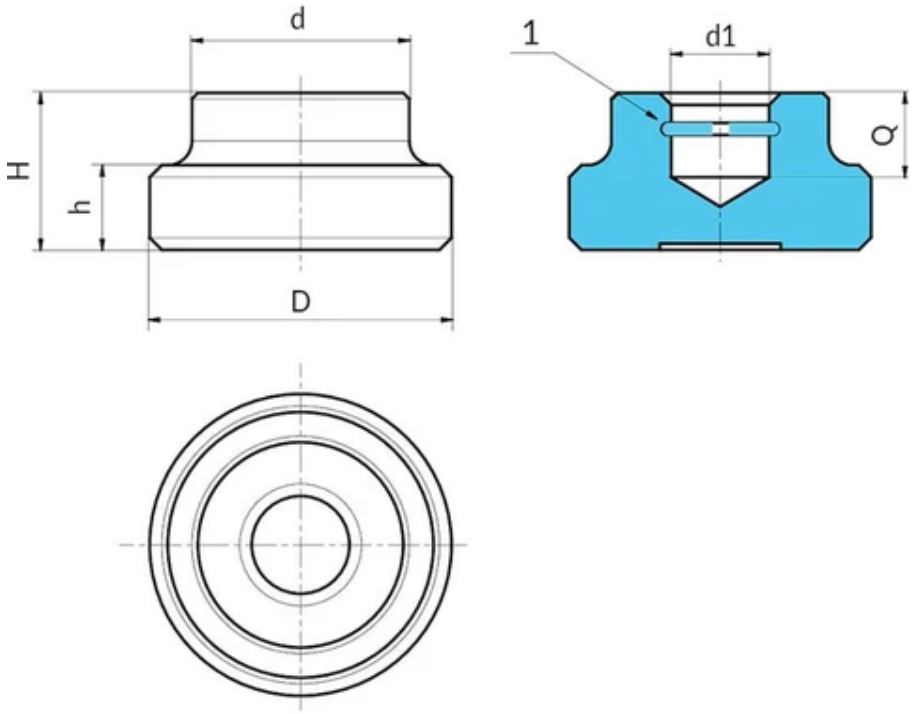


| Code | art. | D | d | H | h | pour pivots DIN 6332 | d1 H12 | Q | Poids (g) |
|---|---|---|---|---|---|---|---|---|---|
| Y631012.0002 | Y631012.SBD04.6 | 12 | 10 | 7 | 2.5 | M06 | 4.6 | 4 | 4 |
| Y631016.0002 | Y631016.SBD06.1 | 16 | 12 | 9 | 4 | M08 | 6.1 | 5 | 9 |
| Y631020.0002 | Y631020.SBD08.1 | 20 | 15 | 11 | 5 | M10 | 8.1 | 6 | 12 |
| Y631025.0002 | Y631025.SBD08.1 | 25 | 18 | 13 | 7 | M12 | 8.1 | 7 | 34 |
| Y631032.0002 | Y631032.SBD12.1 | 32 | 22 | 15 | 7 | M16 | 12.1 | 7.5 | 57 |
| Y631040.0002 | Y631040.SBD15.6 | 40 | 28 | 16 | 9 | M20 | 15.6 | 8 | 103 |

| Code | art. | D | d | H | h | pour pivots DIN 6332 | d1 H12 | Q | Poids (g) |
|---|---|---|---|---|---|---|---|---|---|
| Y631012.0001 | Y631012.IND04.6CIN | 12 | 10 | 7 | 2.5 | M06 | 4.6 | 4 | 4 |
| Y631016.0001 | Y631016.IND06.1CIN | 16 | 12 | 9 | 4 | M08 | 6.1 | 5 | 9 |
| Y631020.0001 | Y631020.IND08.1CIN | 20 | 15 | 11 | 5 | M10 | 8.1 | 6 | 12 |
| Y631025.0001 | Y631025.IND08.1CIN | 25 | 18 | 13 | 7 | M12 | 8.1 | 7 | 34 |
| Y631032.0001 | Y631032.IND12.1CIN | 32 | 22 | 15 | 7 | M16 | 12.1 | 7.5 | 57 |
| Y631040.0001 | Y631040.IND15.6CIN | 40 | 28 | 16 | 9 | M20 | 15.6 | 8 | 103 |

# Y633

+200° -20° | 39 NiCr | Aisi 303 | RoHS COMPLIANT

23

## DIN 6332 - AXE FILETÉ AVEC EMBOUT EN ACIER POUR BASE DIN 6311

Piedi e perni di spinta DIN

**Matériaux :**

Y633:

Axe fileté en acier, avec rainure pour tournevis et embout cimenté.

Y633 CIN:

Axe fileté en acier inox (Aisi 303), avec rainure pour tournevis et embout.

**Surface :**

Passée au tour.

**Couleur :**

Y633:

Brunie noir

Y633 CIN:

Naturelle.

**Demandes spéciales :**

Aucune.

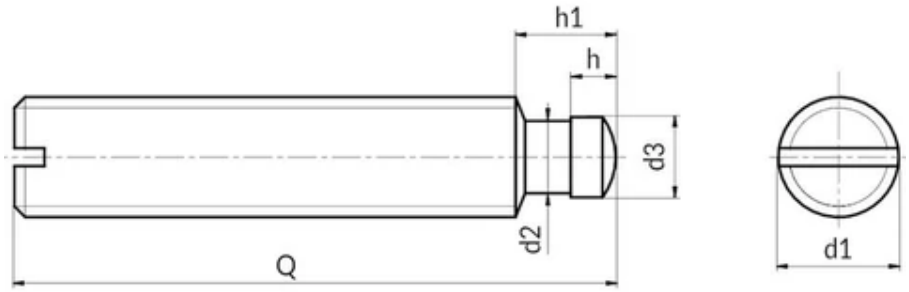


**Version Y633 - en acier bruni**

| Code | art. | d1 6g | d2 | d3 | h | h1 | h2 | pour base DIN 6311 | Q | Poids (g) |
|---|---|---|---|---|---|---|---|---|---|---|
| Y633.0033 | Y633.SBM06X035 | M6 | 4 | 4,5 | 2,5 | 6 | 2,2 | 12 | 035 | 5,5 |
| Y633.0033 | Y633.SBM06X040 | M6 | 4 | 4,5 | 2,5 | 6 | 2,2 | 12 | 040 | 6 |
| Y633.0033 | Y633.SBM06X050 | M6 | 4 | 4,5 | 2,5 | 6 | 2,2 | 12 | 050 | 8 |
| Y633.0038 | Y633.SBM08X040 | M8 | 5,4 | 6 | 3 | 7,5 | 3 | 16 | 040 | 11 |
| Y633.0038 | Y633.SBM08X045 | M8 | 5,4 | 6 | 3 | 7,5 | 3 | 16 | 045 | 13 |
| Y633.0038 | Y633.SBM08X050 | M8 | 5,4 | 6 | 3 | 7,5 | 3 | 16 | 050 | 14 |
| Y633.0038 | Y633.SBM08X060 | M8 | 5,4 | 6 | 3 | 7,5 | 3 | 16 | 060 | 17,5 |
| Y633.0043 | Y633.SBM10X055 | M10 | 7,2 | 8 | 4,5 | 9 | 3,6 | 20 | 055 | 24 |
| Y633.0043 | Y633.SBM10X060 | M10 | 7,2 | 8 | 4,5 | 9 | 3,6 | 20 | 060 | 27 |
| Y633.0043 | Y633.SBM10X065 | M10 | 7,2 | 8 | 4,5 | 9 | 3,6 | 20 | 065 | 28 |
| Y633.0043 | Y633.SBM10X080 | M10 | 7,2 | 8 | 4,5 | 9 | 3,6 | 20 | 080 | 30 |
| Y633.0049 | Y633.SBM12X065 | M12 | 7,2 | 8 | 4,5 | 10 | 4,5 | 25 | 065 | 41 |
| Y633.0049 | Y633.SBM12X070 | M12 | 7,2 | 8 | 4,5 | 10 | 4,5 | 25 | 070 | 44,6 |
| Y633.0049 | Y633.SBM12X100 | M12 | 7,2 | 8 | 4,5 | 10 | 4,5 | 25 | 100 | 65 |
| Y633.0054 | Y633.SBM16X070 | M16 | 11 | 12 | 5 | 12 | 5,3 | 32 | 070 | 82 |
| Y633.0054 | Y633.SBM16X080 | M16 | 11 | 12 | 5 | 12 | 5,3 | 32 | 080 | 99 |
| Y633.0054 | Y633.SBM16X100 | M16 | 11 | 12 | 5 | 12 | 5,3 | 32 | 100 | 122 |
| Y633.0054 | Y633.SBM16X125 | M16 | 11 | 12 | 5 | 12 | 5,3 | 32 | 125 | 154 |
| Y633.0059 | Y633.SBM20X090 | M20 | 14,4 | 15,5 | 5,5 | 14 | 5,6 | 40 | 090 | 170 |
| Y633.0059 | Y633.SBM20X100 | M20 | 14,4 | 15,5 | 5,5 | 14 | 5,6 | 40 | 100 | 188 |
| Y633.0059 | Y633.SBM20X125 | M20 | 14,4 | 15,5 | 5,5 | 14 | 5,6 | 40 | 125 | 239 |

| Code | art. | d1 6g | d2 | d3 | h | h1 | h2 | pour base DIN 6311 | Q | Poids (g) |
|---|---|---|---|---|---|---|---|---|---|---|
| Y633.0059 | Y633.SBM20X150 | M20 | 14,4 | 15,5 | 5,5 | 14 | 5,6 | 40 | 150 | 292 |

**Version W633 CIN - en acier inox (Aisi 303)**

| Code | art. | d1 6g | d2 | d3 | h | h1 | h2 | pour base DIN 6311 | Q | Poids (g) |
|---|---|---|---|---|---|---|---|---|---|---|
| Y633.0004 | Y633.INM06X035CIN | M6 | 4 | 4,5 | 2,5 | 6 | 2,2 | 12 | 035 | 5,5 |
| Y633.0004 | Y633.INM06X040CIN | M6 | 4 | 4,5 | 2,5 | 6 | 2,2 | 12 | 040 | 6 |
| Y633.0004 | Y633.INM06X050CIN | M6 | 4 | 4,5 | 2,5 | 6 | 2,2 | 12 | 050 | 8 |
| Y633.0009 | Y633.INM08X040CIN | M8 | 5,4 | 6 | 3 | 7,5 | 3 | 16 | 040 | 11 |
| Y633.0009 | Y633.INM08X045CIN | M8 | 5,4 | 6 | 3 | 7,5 | 3 | 16 | 045 | 13 |
| Y633.0009 | Y633.INM08X050CIN | M8 | 5,4 | 6 | 3 | 7,5 | 3 | 16 | 050 | 14 |
| Y633.0009 | Y633.INM08X060CIN | M8 | 5,4 | 6 | 3 | 7,5 | 3 | 16 | 060 | 17,5 |
| Y633.0014 | Y633.INM10X055CIN | M10 | 7,2 | 8 | 4,5 | 9 | 3,6 | 20 | 055 | 24 |
| Y633.0014 | Y633.INM10X060CIN | M10 | 7,2 | 8 | 4,5 | 9 | 3,6 | 20 | 060 | 27 |
| Y633.0014 | Y633.INM10X065CIN | M10 | 7,2 | 8 | 4,5 | 9 | 3,6 | 20 | 065 | 28 |
| Y633.0014 | Y633.INM10X080CIN | M10 | 7,2 | 8 | 4,5 | 9 | 3,6 | 20 | 080 | 30 |
| Y633.0019 | Y633.INM12X065CIN | M12 | 7,2 | 8 | 4,5 | 10 | 4,5 | 25 | 065 | 41 |
| Y633.0019 | Y633.INM12X070CIN | M12 | 7,2 | 8 | 4,5 | 10 | 4,5 | 25 | 070 | 44,6 |
| Y633.0019 | Y633.INM12X080CIN | M12 | 7,2 | 8 | 4,5 | 10 | 4,5 | 25 | 080 | 52 |
| Y633.0019 | Y633.INM12X100CIN | M12 | 7,2 | 8 | 4,5 | 10 | 4,5 | 25 | 100 | 65 |
| Y633.0023 | Y633.INM16X070CIN | M16 | 11 | 12 | 5 | 12 | 5,3 | 32 | 070 | 82 |
| Y633.0023 | Y633.INM16X080CIN | M16 | 11 | 12 | 5 | 12 | 5,3 | 32 | 080 | 99 |
| Y633.0023 | Y633.INM16X100CIN | M16 | 11 | 12 | 5 | 12 | 5,3 | 32 | 100 | 122 |
| Y633.0023 | Y633.INM16X125CIN | M16 | 11 | 12 | 5 | 12 | 5,3 | 32 | 125 | 154 |
| Y633.0028 | Y633.INM20X090CIN | M20 | 14,4 | 15,5 | 5,5 | 14 | 5,6 | 40 | 090 | 170 |
| Y633.0028 | Y633.INM20X100CIN | M20 | 14,4 | 15,5 | 5,5 | 14 | 5,6 | 40 | 100 | 188 |
| Y633.0028 | Y633.INM20X125CIN | M20 | 14,4 | 15,5 | 5,5 | 14 | 5,6 | 40 | 125 | 239 |
| Y633.0028 | Y633.INM20X150CIN | M20 | 14,4 | 15,5 | 5,5 | 14 | 5,6 | 40 | 150 | 292 |

# Y705

UPDATE | +200° -40° | C40 | Aisi 303 | RoHS COMPLIANT

23

## DIN 705 - BAGUE D'ARRÊT EN ACIER AVEC GOUJON DE FIXATION DIN 553 EN ACIER

Anelli di serraggio

**Matériaux :**
Y705:
Acier standard.
Y705PIN:
Acier inox (Aisi 303).

**Surface :**
Lisse par tournage.

**Couleur :**
Y705:
Brunissage.
Y705PIN:
Naturelle.

**Goujon de fixation :**
Goujon de fixation avec rainure pour tournevis DIN 553.
Attention :
le deuxième goujon est ajuté à partir du diamètre D=>70 mm.

**Demandes spéciales :**
Aucune.

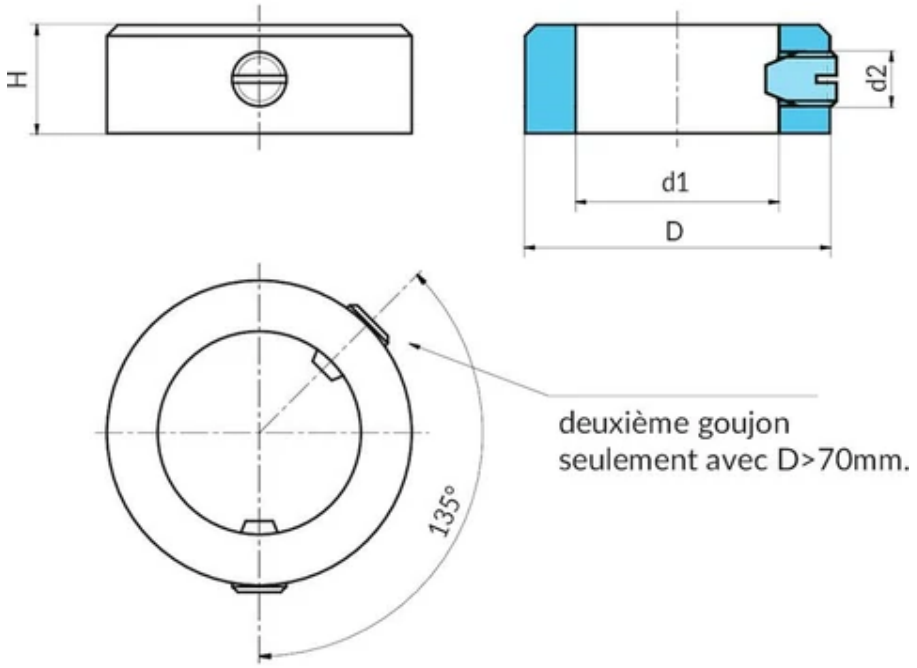


**Version Y705: en acier bruni**

| Code | Art. | D h13 | H js14 | d2 | d1 H8 | Poids (g) |
|---|---|---|---|---|---|---|
| Y705007.0002 | Y705007.VBD003 | 7 | 5 | M2 | 3 | 1,2 |
| Y705008.0002 | Y705008.VBD004 | 8 | 5 | M2.5 | 4 | 1,4 |
| Y705010.0002 | Y705010.VBD005 | 10 | 6 | M3 | 5 | 2,7 |
| Y705012.0003 | Y705012.VBD006 | 12 | 8 | M4 | 6 | 5 |
| Y705012.0004 | Y705012.VBD007 | 12 | 8 | M4 | 7 | 5 |
| Y705016.0002 | Y705016.VBD008 | 16 | 8 | M4 | 8 | 9 |
| Y705018.0002 | Y705018.VBD009 | 18 | 10 | M5 | 9 | 14,5 |
| Y705020.0003 | Y705020.VBD010 | 20 | 10 | M5 | 10 | 18 |
| Y705020.0004 | Y705020.VBD011 | 20 | 10 | M5 | 11 | 16,5 |
| Y705022.0002 | Y705022.VBD012 | 22 | 12 | M6 | 12 | 24 |
| Y705025.0003 | Y705025.VBD014 | 25 | 12 | M6 | 14 | 30,5 |
| Y705025.0004 | Y705025.VBD015 | 25 | 12 | M6 | 15 | 28 |
| Y705028.0002 | Y705028.VBD016 | 28 | 12 | M6 | 16 | 37 |
| Y705032.0003 | Y705032.VBD018 | 32 | 14 | M6 | 18 | 58 |
| Y705032.0004 | Y705032.VBD020 | 32 | 14 | M6 | 20 | 52 |
| Y705040.0004 | Y705040.VBD024 | 40 | 16 | M8 | 24 | 98 |
| Y705040.0005 | Y705040.VBD025 | 40 | 16 | M8 | 25 | 94 |
| Y705040.0006 | Y705040.VBD026 | 40 | 16 | M8 | 26 | 86,5 |
| Y705045.0003 | Y705045.VBD028 | 45 | 16 | M8 | 28 | 120 |
| Y705045.0004 | Y705045.VBD030 | 45 | 16 | M8 | 30 | 107 |
| Y705050.0002 | Y705050.VBD032 | 50 | 16 | M8 | 32 | 142 |

| Code | Art. | D h13 | H js14 | d2 | d1 H8 | Poids (g) |
|---|---|---|---|---|---|---|
| Y706056.0004 | Y706056.VBD035 | 56 | 16 | M8 | 35 | 184 |
| Y705056.0005 | Y705056.VBD036 | 56 | 16 | M8 | 36 | 177 |
| Y705056.0006 | Y705056.VBD038 | 56 | 16 | M8 | 38 | 163 |
| Y705063.0003 | Y705063.VBD040 | 63 | 18 | M10 | 40 | 256 |
| Y705063.0004 | Y705063.VBD042 | 63 | 18 | M10 | 42 | 240 |
| Y705070.0003 | Y705070.VBD045 | 70 | 18 | M10 | 45 | 313 |
| Y705070.0004 | Y705070.VBD048 | 70 | 18 | M10 | 48 | 313 |
| Y705080.0005 | Y705080.VBD050 | 80 | 18 | M10 | 50 | 424 |
| Y705080.0006 | Y705080.VBD052 | 80 | 18 | M10 | 52 | 401 |
| Y705080.0007 | Y705080.VBD055 | 80 | 18 | M10 | 55 | 367 |
| Y705080.0008 | Y705080.VBD056 | 80 | 18 | M10 | 56 | 362 |
| Y705090.0004 | Y705090.VBD058 | 90 | 20 | M10 | 58 | 572 |
| Y705090.0005 | Y705090.VBD060 | 90 | 20 | M10 | 60 | 555 |
| Y705090.0006 | Y705090.VBD063 | 90 | 20 | M10 | 63 | 498 |
| Y705100.0004 | Y705100.VBD065 | 100 | 20 | M10 | 65 | 702 |
| Y705100.0005 | Y705100.VBD068 | 100 | 20 | M10 | 68 | 702 |
| Y705100.0006 | Y705100.VBD070 | 100 | 20 | M10 | 70 | 615 |
| Y705110.0004 | Y705110.VBD072 | 110 | 22 | M12 | 72 | 938 |
| Y705110.0005 | Y705110.VBD075 | 110 | 22 | M12 | 75 | 878 |
| Y705110.0006 | Y705110.VBD080 | 110 | 22 | M12 | 80 | 773 |
| Y705125.0003 | Y705125.VBD085 | 125 | 22 | M12 | 85 | 1139 |
| Y705125.0004 | Y705125.VBD090 | 125 | 22 | M12 | 90 | 1021 |
| Y705140.0002 | Y705140.VBD100 | 140 | 25 | M12 | 100 | 1480 |

**Version Y705 PIN - en acier inox (Aisi 303)**

| Code | Art. | D h13 | H js14 | d2 | d1 H8 | Poids (g) |
|---|---|---|---|---|---|---|
| Y705007.0001 | Y705007.IND003PIN | 7 | 5 | M2 | 3 | 1,2 |
| Y705008.0001 | Y705008.IND004PIN | 8 | 5 | M2,5 | 4 | 1,4 |
| Y705010.0001 | Y705010.IND005PIN | 10 | 6 | M3 | 5 | 2,7 |
| Y705012.0001 | Y705012.IND006PIN | 12 | 8 | M4 | 6 | 5 |
| Y705012.0002 | Y705012.IND007PIN | 12 | 8 | M4 | 7 | 5 |
| Y705016.0001 | Y705016.IND008PIN | 16 | 8 | M4 | 8 | 9 |
| Y705018.0001 | Y705018.IND009PIN | 18 | 10 | M5 | 9 | 14,5 |
| Y705020.0001 | Y705020.IND010PIN | 20 | 10 | M5 | 10 | 18 |
| Y705020.0002 | Y705020.IND011PIN | 20 | 10 | M5 | 11 | 16,5 |
| Y705022.0001 | Y705022.IND012PIN | 22 | 12 | M6 | 12 | 24 |
| Y705025.0001 | Y705025.IND014PIN | 25 | 12 | M6 | 14 | 30,5 |
| Y705025.0002 | Y705025.IND015PIN | 25 | 12 | M6 | 15 | 28 |
| Y705028.0001 | Y705028.IND016PIN | 28 | 12 | M6 | 16 | 37 |
| Y705032.0001 | Y705032.IND018PIN | 32 | 14 | M6 | 18 | 58 |

| Code | Art. | D h13 | H js14 | d2 | d1 H8 | Poids (g) |
|---|---|---|---|---|---|---|
| Y705032.0002 | Y705032.IND020PIN | 32 | 14 | M6 | 20 | 52 |
| Y705040.0001 | Y705040.IND024PIN | 40 | 16 | M8 | 24 | 98 |
| Y705040.0002 | Y705040.IND025PIN | 40 | 16 | M8 | 25 | 94 |
| Y705040.0003 | Y705040.IND026PIN | 40 | 16 | M8 | 26 | 86,5 |
| Y705045.0001 | Y705045.IND028PIN | 45 | 16 | M8 | 28 | 120 |
| Y705045.0002 | Y705045.IND030PIN | 45 | 16 | M8 | 30 | 107 |
| Y705050.0001 | Y705050.IND032PIN | 50 | 16 | M8 | 32 | 142 |
| Y705056.0001 | Y705056.IND035PIN | 56 | 16 | M8 | 35 | 184 |
| Y705056.0002 | Y705056.IND036PIN | 56 | 16 | M8 | 36 | 177 |
| Y705056.0003 | Y705056.IND038PIN | 56 | 16 | M8 | 38 | 163 |
| Y705063.0001 | Y705063.IND040PIN | 63 | 18 | M10 | 40 | 256 |
| Y705063.0002 | Y705063.IND042PIN | 63 | 18 | M10 | 42 | 240 |
| Y705070.0001 | Y705070.IND045PIN | 70 | 18 | M10 | 45 | 313 |
| Y705070.0002 | Y705070.IND048PIN | 70 | 18 | M10 | 48 | 313 |
| Y705080.0001 | Y705080.IND050PIN | 80 | 18 | M10 | 50 | 424 |
| Y705080.0002 | Y705080.IND052PIN | 80 | 18 | M10 | 52 | 401 |
| Y705080.0003 | Y705080.IND055PIN | 80 | 18 | M10 | 55 | 367 |
| Y705080.0004 | Y705080.IND056PIN | 80 | 18 | M10 | 56 | 362 |
| Y705090.0001 | Y705090.IND058PIN | 90 | 20 | M10 | 58 | 572 |
| Y705090.0002 | Y705090.IND060PIN | 90 | 20 | M10 | 60 | 555 |
| Y705090.0003 | Y705090.IND063PIN | 90 | 20 | M10 | 63 | 498 |
| Y705100.0001 | Y705100.IND065PIN | 100 | 20 | M10 | 65 | 702 |
| Y705100.0002 | Y705100.IND068PIN | 100 | 20 | M10 | 68 | 702 |
| Y705100.0003 | Y705100.IND070PIN | 100 | 20 | M10 | 70 | 615 |
| Y705110.0001 | Y705110.IND072PIN | 110 | 22 | M12 | 72 | 938 |
| Y705110.0002 | Y705110.IND075PIN | 110 | 22 | M12 | 75 | 878 |
| Y705110.0003 | Y705110.IND080PIN | 110 | 22 | M12 | 80 | 773 |
| Y705125.0001 | Y705125.IND085PIN | 125 | 22 | M12 | 85 | 1139 |
| Y705125.0002 | Y705125.IND090PIN | 125 | 22 | M12 | 90 | 1021 |
| Y705140.0001 | Y705140.IND100PIN | 140 | 25 | M12 | 100 | 1480 |

# Y706

UPDATE | +200° -40° | C40 | Aisi 303 | RoHS COMPLIANT

23

## DIN 705 - BAGUE D'ARRÊT EN ACIER AVEC GOUJON DE FIXATION DIN 914 EN ACIER

Anelli di serraggio

**Matériaux :**
Y706:
Acier standard.
Y706PIN:
Acier inox (Aisi 303).

**Surface :**
Lisse par tournage.

**Couleur :**
Y706:
Brunissage.
Y706PIN:
Naturelle.

**Goujon de fixation :**
Goujon de fixation à 6 pans creux DIN 914.
Attention :
le deuxième goujon est ajuté à partir du diamètre D=>70 mm.

**Demandes spéciales :**
Aucune.

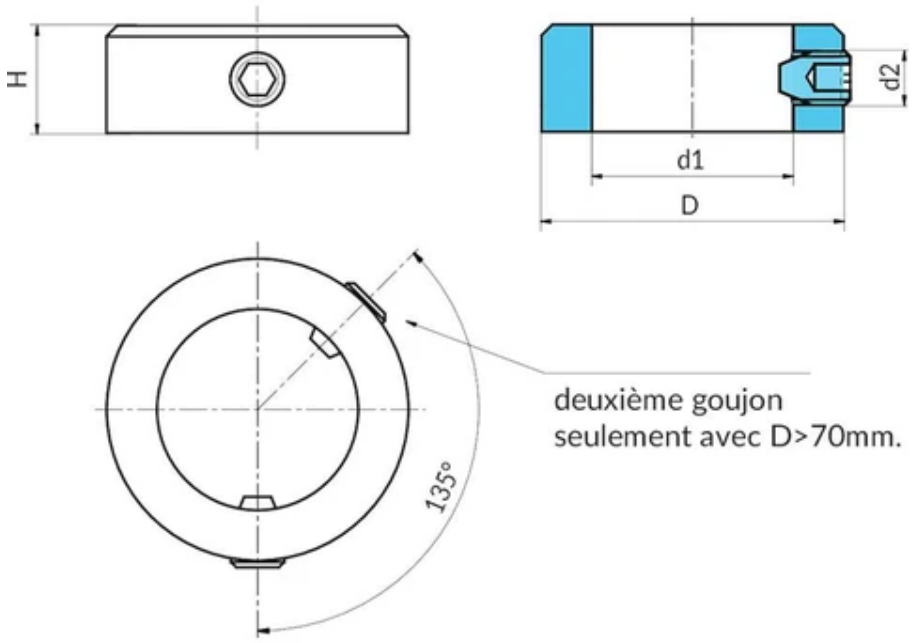


**Version Y706: en acier bruni**

| Code | Art. | D h13 | H js14 | d2 | d1 H8 | Poids (g) |
|---|---|---|---|---|---|---|
| Y706007.0002 | Y706007.VBD003 | 7 | 5 | M2 | 3 | 1,2 |
| Y706008.0002 | Y706008.VBD004 | 8 | 5 | M2,5 | 4 | 1,4 |
| Y706010.0002 | Y706010.VBD005 | 10 | 6 | M3 | 5 | 2,7 |
| Y706012.0003 | Y706012.VBD006 | 12 | 8 | M4 | 6 | 5 |
| Y706012.0004 | Y706012.VBD007 | 12 | 8 | M4 | 7 | 5 |
| Y706016.0002 | Y706016.VBD008 | 16 | 8 | M4 | 8 | 9 |
| Y706018.0002 | Y706018.VBD009 | 18 | 10 | M5 | 9 | 14,5 |
| Y706020.0003 | Y706020.VBD010 | 20 | 10 | M5 | 10 | 18 |
| Y706020.0005 | Y706020.VBD011 | 20 | 10 | M5 | 11 | 16,5 |
| Y706022.0002 | Y706022.VBD012 | 22 | 12 | M6 | 12 | 24 |
| Y706025.0003 | Y706025.VBD014 | 25 | 12 | M6 | 14 | 30,5 |
| Y706025.0004 | Y706025.VBD015 | 25 | 12 | M6 | 15 | 28 |
| Y706028.0002 | Y706028.VBD016 | 28 | 12 | M6 | 16 | 37 |
| Y706032.0003 | Y706032.VBD018 | 32 | 14 | M6 | 18 | 58 |
| Y706032.0004 | Y706032.VBD020 | 32 | 14 | M6 | 20 | 52 |
| Y706040.0004 | Y706040.VBD024 | 40 | 16 | M8 | 24 | 98 |
| Y706040.0005 | Y706040.VBD025 | 40 | 16 | M8 | 25 | 94 |
| Y706040.0007 | Y706040.VBD026 | 40 | 16 | M8 | 26 | 86,5 |
| Y706045.0003 | Y706045.VBD028 | 45 | 16 | M8 | 28 | 120 |
| Y706045.0004 | Y706045.VBD030 | 45 | 16 | M8 | 30 | 107 |
| Y706050.0002 | Y706050.VBD032 | 50 | 16 | M8 | 32 | 142 |

| Code | Art. | D h13 | H js14 | d2 | d1 H8 | Poids (g) |
|---|---|---|---|---|---|---|
| Y706056.0004 | Y706056.VBD035 | 56 | 16 | M8 | 35 | 184 |
| Y706056.0005 | Y706056.VBD036 | 56 | 16 | M8 | 36 | 177 |
| Y706056.0006 | Y706056.VBD038 | 56 | 16 | M8 | 38 | 163 |
| Y706063.0003 | Y706063.VBD040 | 63 | 18 | M10 | 40 | 256 |
| Y706063.0004 | Y706063.VBD042 | 63 | 18 | M10 | 42 | 240 |
| Y706070.0003 | Y706070.VBD045 | 70 | 18 | M10 | 45 | 313 |
| Y706070.0004 | Y706070.VBD048 | 70 | 18 | M10 | 48 | 313 |
| Y706080.0005 | Y706080.VBD050 | 80 | 18 | M10 | 50 | 424 |
| Y706080.0006 | Y706080.VBD052 | 80 | 18 | M10 | 52 | 401 |
| Y706080.0007 | Y706080.VBD055 | 80 | 18 | M10 | 55 | 367 |
| Y706080.0008 | Y706080.VBD056 | 80 | 18 | M10 | 56 | 362 |
| Y706090.0004 | Y706090.VBD058 | 90 | 20 | M10 | 58 | 572 |
| Y706090.0005 | Y706090.VBD060 | 90 | 20 | M10 | 60 | 555 |
| Y706090.0006 | Y706090.VBD063 | 90 | 20 | M10 | 63 | 498 |
| Y706100.0004 | Y706100.VBD065 | 100 | 20 | M10 | 65 | 702 |
| Y706100.0005 | Y706100.VBD068 | 100 | 20 | M10 | 68 | 702 |
| Y706100.0006 | Y706100.VBD070 | 100 | 20 | M10 | 70 | 615 |
| Y706110.0004 | Y706110.VBD072 | 110 | 22 | M12 | 72 | 938 |
| Y706110.0005 | Y706110.VBD075 | 110 | 22 | M12 | 75 | 878 |
| Y706110.0006 | Y706110.VBD080 | 110 | 22 | M12 | 80 | 773 |
| Y706125.0003 | Y706125.VBD085 | 125 | 22 | M12 | 85 | 1139 |
| Y706125.0004 | Y706125.VBD090 | 125 | 22 | M12 | 90 | 1021 |
| Y706140.0002 | Y706140.VBD100 | 140 | 25 | M12 | 100 | 1480 |

**Version Y706 PIN - en acier inox (Aisi 303)**

| Code | Art. | D h13 | H js14 | d2 | d1 H8 | Poids (g) |
|---|---|---|---|---|---|---|
| Y706007.0001 | Y706007.IND003PIN | 7 | 5 | M2 | 3 | 1,2 |
| Y706008.0001 | Y706008.IND004PIN | 8 | 5 | M2,5 | 4 | 1,4 |
| Y706010.0001 | Y706010.IND005PIN | 10 | 6 | M3 | 5 | 2,7 |
| Y706012.0002 | Y706012.IND007PIN | 12 | 8 | M4 | 7 | 5 |
| Y706016.0001 | Y706016.IND008PIN | 16 | 8 | M4 | 8 | 9 |
| Y706018.0001 | Y706018.IND009PIN | 18 | 10 | M5 | 9 | 14,5 |
| Y706020.0001 | Y706020.IND010PIN | 20 | 10 | M5 | 10 | 18 |
| Y706020.0002 | Y706020.IND011PIN | 20 | 10 | M5 | 11 | 16,5 |
| Y706022.0001 | Y706022.IND012PIN | 22 | 12 | M6 | 12 | 24 |
| Y706025.0001 | Y706025.IND014PIN | 25 | 12 | M6 | 14 | 30,5 |
| Y706025.0002 | Y706025.IND015PIN | 25 | 12 | M6 | 15 | 28 |
| Y706028.0001 | Y706028.IND016PIN | 28 | 12 | M6 | 16 | 37 |
| Y706032.0001 | Y706032.IND018PIN | 32 | 14 | M6 | 18 | 58 |
| Y705032.0002 | Y705032.IND020PIN | 32 | 14 | M6 | 20 | 52 |

| Code | Art. | D h13 | H js14 | d2 | d1 H8 | Poids (g) |
|---|---|---|---|---|---|---|
| Y706040.0001 | Y706040.IND024PIN | 40 | 16 | M8 | 24 | 98 |
| Y706040.0002 | Y706040.IND025PIN | 40 | 16 | M8 | 25 | 94 |
| Y706040.0003 | Y706040.IND026PIN | 40 | 16 | M8 | 26 | 86,5 |
| Y706045.0001 | Y706045.IND028PIN | 45 | 16 | M8 | 28 | 120 |
| Y706045.0002 | Y706045.IND030PIN | 45 | 16 | M8 | 30 | 107 |
| Y706050.0001 | Y706050.IND032PIN | 50 | 16 | M8 | 32 | 142 |
| Y706056.0001 | Y706056.IND035PIN | 56 | 16 | M8 | 35 | 184 |
| Y706056.0002 | Y706056.IND036PIN | 56 | 16 | M8 | 36 | 177 |
| Y706056.0003 | Y706056.IND038PIN | 56 | 16 | M8 | 38 | 163 |
| Y706063.0001 | Y706063.IND040PIN | 63 | 18 | M10 | 40 | 256 |
| Y706063.0002 | Y706063.IND042PIN | 63 | 18 | M10 | 42 | 240 |
| Y706070.0001 | Y706070.IND045PIN | 70 | 18 | M10 | 45 | 313 |
| Y706070.0002 | Y706070.IND048PIN | 70 | 18 | M10 | 48 | 313 |
| Y706080.0001 | Y706080.IND050PIN | 80 | 18 | M10 | 50 | 424 |
| Y706080.0002 | Y706080.IND052PIN | 80 | 18 | M10 | 52 | 401 |
| Y706080.0003 | Y706080.IND055PIN | 80 | 18 | M10 | 55 | 367 |
| Y706080.0004 | Y706080.IND056PIN | 80 | 18 | M10 | 56 | 362 |
| Y706090.0001 | Y706090.IND058PIN | 90 | 20 | M10 | 58 | 572 |
| Y706090.0002 | Y706090.IND060PIN | 90 | 20 | M10 | 60 | 555 |
| Y706090.0003 | Y706090.IND063PIN | 90 | 20 | M10 | 63 | 498 |
| Y706100.0001 | Y706100.IND065PIN | 100 | 20 | M10 | 65 | 702 |
| Y706100.0002 | Y706100.IND068PIN | 100 | 20 | M10 | 68 | 702 |
| Y706100.0003 | Y706100.IND070PIN | 100 | 20 | M10 | 70 | 615 |
| Y706110.0001 | Y706110.IND072PIN | 110 | 22 | M12 | 72 | 938 |
| Y706110.0002 | Y706110.IND075PIN | 110 | 22 | M12 | 75 | 878 |
| Y706110.0003 | Y706110.IND080PIN | 110 | 22 | M12 | 80 | 773 |
| Y706125.0001 | Y706125.IND085PIN | 125 | 22 | M12 | 85 | 1139 |
| Y706125.0002 | Y706125.IND090PIN | 125 | 22 | M12 | 90 | 1021 |
| Y706140.0001 | Y706140.IND100PIN | 140 | 25 | M12 | 100 | 1480 |

# Y708

+200° -40° | AVP | Aisi 303 | Al | RoHS COMPLIANT

## 23 BAGUE D'ARRÊT FENDUE EN DEUX PARTIES

Anelli di serraggio

**Matériaux (1):**
Y708 :
Acier de décolletage tourné.
Y708PIN :
Acier inox tourné (Aisi 303).
Y708AND :
Aluminium tourné (Al 6060).

**Surface :**
Finement tournée.

**Couleur :**
Y708 :
Brunissage standard.
Y708PIN :
Naturelle.
Y708AND :
Naturelle.

**Vis de fixation (2) :**
Y709 :
N° 1 vis à six pans creux en acier bruni classe 12.9 DIN 912.
Y709PIN - Y710AND :
N° 1 vis à six pans creux en acier inox (Aisi 304) DIN 912.

**ATTENTION :**
Il est recommandé d'exécuter l'arbre avec une tolérance inférieure à la classe h11.

**Demandes spéciales :**
Aucune.

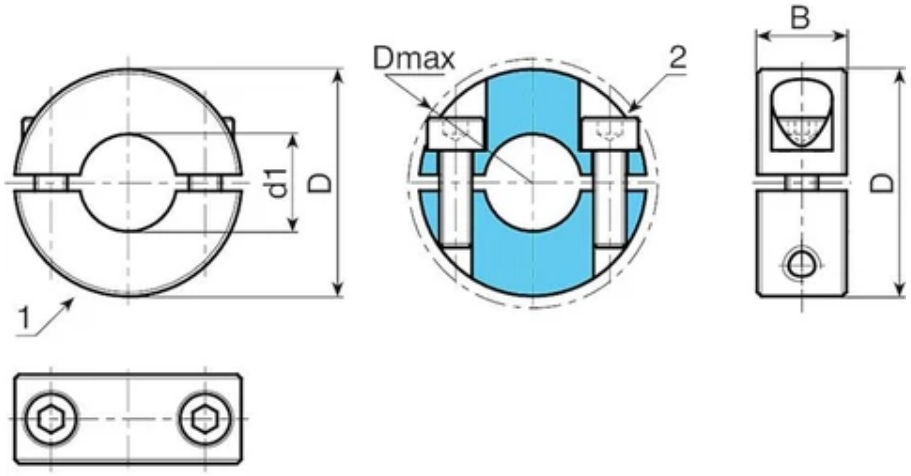


**Version Y708 : Bagues en acier bruni**

| Code | Art. | D | Dmax | B | d1 | DIN 912 | Poids (g) |
|---|---|---|---|---|---|---|---|
| Y708016.0007 | Y708016.VBD04 | 16 | 20.7 | 9 | 4 | M03x8 | 12.5 |
| Y708016.0008 | Y708016.VBD05 | 16 | 20.7 | 9 | 5 | M03x8 | 12.7 |
| Y708016.0009 | Y708016.VBD06 | 16 | 20.7 | 9 | 6 | M03x8 | 10.3 |
| Y708018.0003 | Y708018.VBD08 | 18 | 22.4 | 9 | 8 | M03x8 | 14 |
| Y708024.0003 | Y708024.VBD10 | 24 | 26 | 9 | 10 | M03x10 | 22 |
| Y708028.0003 | Y708028.VBD12 | 28 | 31.8 | 11 | 12 | M04x12 | 37 |
| Y708034.0005 | Y708034.VBD15 | 34 | 39.4 | 13 | 15 | M05x16 | 61.5 |
| Y708034.0006 | Y708034.VBD16 | 34 | 39.4 | 13 | 16 | M05x16 | 62 |
| Y708036.0003 | Y708036.VBD18 | 36 | 41.1 | 13 | 18 | M05x16 | 66 |
| Y708040.0003 | Y708040.VBD20 | 40 | 46.4 | 15 | 20 | M06x18 | 99 |
| Y708042.0003 | Y708042.VBD22 | 42 | 48.1 | 15 | 22 | M06x18 | 105 |
| Y708045.0003 | Y708045.VBD25 | 45 | 50.8 | 15 | 25 | M06x18 | 116 |
| Y708048.0003 | Y708048.VBD28 | 48 | 53.7 | 15 | 28 | M06x18 | 123 |
| Y708054.0003 | Y708054.VBD30 | 54 | 58.6 | 15 | 30 | M06x18 | 166 |
| Y708060.0003 | Y708060.VBD40 | 60 | 65 | 15 | 40 | M06x18 | 166 |
| Y708078.0003 | Y708078.VBD50 | 78 | 87 | 19 | 50 | M08x25 | 390 |

**Version Y708PIN : Bagues en acier inox (Aisi 303).**

| Code | Art. | D | Dmax | B | d1 | DIN 912 | Poids (g) |
|---|---|---|---|---|---|---|---|
| Y708016.0004 | Y708016.IND04PIN | 16 | 20.7 | 9 | 4 | M03x8 | 12 |

| Code | Art. | D | Dmax | B | d1 | DIN 912 | Poids (g) |
|---|---|---|---|---|---|---|---|
| Y708016.0005 | Y708016.IND05PIN | 16 | 20.7 | 9 | 5 | M03x8 | 11.5 |
| Y708016.0006 | Y708016.IND06PIN | 16 | 20.7 | 9 | 6 | M03x8 | 9.5 |
| Y708018.0002 | Y708018.IND08PIN | 18 | 22.4 | 9 | 8 | M03x8 | 12 |
| Y708024.0002 | Y708024.IND10PIN | 24 | 26 | 9 | 10 | M03x10 | 22 |
| Y708028.0002 | Y708028.IND12PIN | 28 | 31.8 | 11 | 12 | M04x12 | 37 |
| Y708034.0003 | Y708034.IND15PIN | 34 | 39.4 | 13 | 15 | M05x16 | 65 |
| Y708034.0004 | Y708034.IND16PIN | 34 | 39.4 | 13 | 16 | M05x16 | 63.5 |
| Y708036.0002 | Y708036.IND18PIN | 36 | 41.1 | 13 | 18 | M05x16 | 69.5 |
| Y708040.0002 | Y708040.IND20PIN | 40 | 46.4 | 15 | 20 | M06x18 | 99 |
| Y708042.0002 | Y708042.IND22PIN | 42 | 48.1 | 15 | 22 | M06x18 | 107 |
| Y708045.0002 | Y708045.IND25PIN | 45 | 50.8 | 15 | 25 | M06x18 | 115 |
| Y708048.0002 | Y708048.IND28PIN | 48 | 53.7 | 15 | 28 | M06x18 | 127 |
| Y708054.0002 | Y708054.IND30PIN | 54 | 58.6 | 15 | 30 | M06x18 | 169 |
| Y708060.0002 | Y708060.IND40PIN | 60 | 65 | 15 | 40 | M06x18 | 166 |
| Y708078.0002 | Y708078.IND50PIN | 78 | 87 | 19 | 50 | M08x25 | 392 |

**Version Y708AND : Bagues en aluminium naturel**

| Code | Art. | D | Dmax | B | d1 | DIN 912 | Poids (g) |
|---|---|---|---|---|---|---|---|
| Y708016.0001 | Y708016.AND04 | 16 | 20.7 | 9 | 4 | M03x8 | 5.5 |
| Y708016.0002 | Y708016.AND05 | 16 | 20.7 | 9 | 5 | M03x8 | 5.3 |
| Y708016.0003 | Y708016.AND06 | 16 | 20.7 | 9 | 6 | M03x8 | 5 |
| Y708018.0001 | Y708018.AND08 | 18 | 22.4 | 9 | 8 | M03x8 | 5.5 |
| Y708024.0001 | Y708024.AND10 | 24 | 26 | 9 | 10 | M03x10 | 9.3 |
| Y708028.0001 | Y708028.AND12 | 28 | 31.8 | 11 | 12 | M04x12 | 15.5 |
| Y708034.0001 | Y708034.AND15 | 34 | 39.4 | 13 | 15 | M05x16 | 28 |
| Y708034.0002 | Y708034.AND16 | 34 | 39.4 | 13 | 16 | M05x16 | 28 |
| Y708036.0001 | Y708036.AND18 | 36 | 41.1 | 13 | 18 | M05x16 | 30 |
| Y708040.0001 | Y708040.AND20 | 40 | 46.4 | 15 | 20 | M06x18 | 43 |
| Y708042.0001 | Y708042.AND22 | 42 | 48.1 | 15 | 22 | M06x18 | 45 |
| Y708045.0001 | Y708045.AND25 | 45 | 50.8 | 15 | 25 | M06x18 | 47 |
| Y708048.0001 | Y708048.AND28 | 48 | 53.7 | 15 | 28 | M06x18 | 51.5 |
| Y708054.0001 | Y708054.AND30 | 54 | 58.6 | 15 | 30 | M06x18 | 67 |
| Y708060.0001 | Y708060.AND40 | 60 | 65 | 15 | 40 | M06x18 | 66 |
| Y708078.0001 | Y708078.AND50 | 78 | 87 | 19 | 50 | M08x25 | 156 |

# Y709

+200° -40° | AVP | Aisi 303 | Al | RoHS COMPLIANT

23

## BAGUE D'ARRÊT FENDUE EN UNE PARTIE - FORME A

Anelli di serraggio

**Matériaux (1):**
Y709 :
Acier de décolletage tourné.
Y709PIN :
Acier inox tourné (Aisi 303).
Y709AND :
Aluminium tourné (Al 6060).

**Surface :**
Finement tournée.

**Couleur :**
Y709 :
Brunissage standard.
Y709PIN :
Naturelle.
Y709AND :
Naturelle.

**Vis de fixation (2) :**
Y709 :
N° 1 vis à six pans creux en acier bruni classe 12.9 DIN 912.
Y709PIN - Y709AND :
N° 1 vis à six pans creux en acier inox (Aisi 304) DIN 912.

**ATTENTION :**
Il est recommandé d'exécuter l'arbre avec une tolérance inférieure à la classe h11.

**Demandes spéciales :**
Aucune.

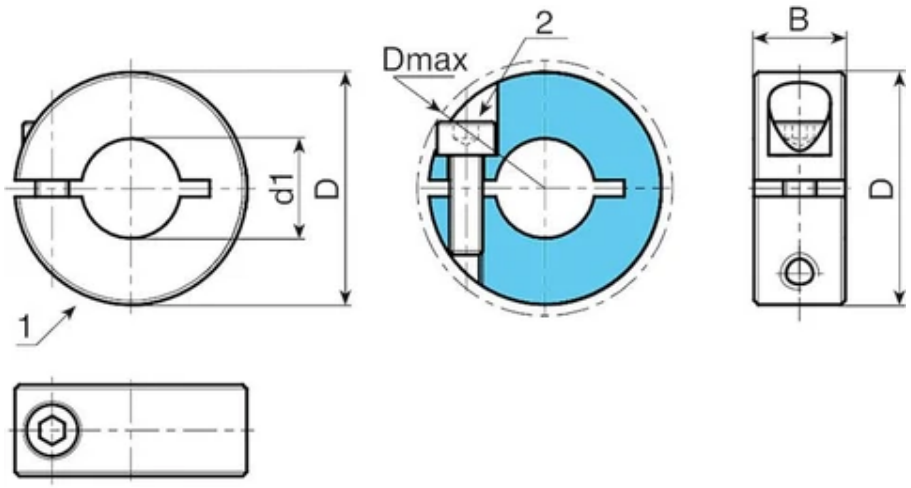


**Version Y709 : Bagues en acier bruni**

| Code | Art. | D | Dmax | B | d1 | DIN 912 | Poids (g) |
|---|---|---|---|---|---|---|---|
| Y709016.0007 | Y709016.VBD04 | 16 | 20.7 | 9 | 4 | M03x8 | 13.5 |
| Y709016.0008 | Y709016.VBD05 | 16 | 20.7 | 9 | 5 | M03x8 | 11.5 |
| Y709016.0009 | Y709016.VBD06 | 16 | 20.7 | 9 | 6 | M03x8 | 10.8 |
| Y709018.0003 | Y709018.VBD08 | 18 | 22.4 | 9 | 8 | M03x8 | 12.8 |
| Y709024.0003 | Y709024.VBD10 | 24 | 26 | 9 | 10 | M03x10 | 23 |
| Y709028.0003 | Y709028.VBD12 | 28 | 31.8 | 11 | 12 | M04x12 | 39 |
| Y709034.0005 | Y709034.VBD15 | 34 | 39.4 | 13 | 15 | M05x16 | 69 |
| Y709034.0006 | Y709034.VBD16 | 34 | 39.4 | 13 | 16 | M05x16 | 65 |
| Y709036.0003 | Y709036.VBD18 | 36 | 41.1 | 13 | 18 | M05x16 | 70.5 |
| Y709040.0003 | Y709040.VBD20 | 40 | 46.4 | 15 | 20 | M06x18 | 103 |
| Y709042.0003 | Y709042.VBD22 | 42 | 48.1 | 15 | 22 | M06x18 | 102 |
| Y709045.0003 | Y709045.VBD25 | 45 | 50.8 | 15 | 25 | M06x18 | 121 |
| Y709048.0003 | Y709048.VBD28 | 48 | 53.7 | 15 | 28 | M06x18 | 132 |
| Y709054.0003 | Y709054.VBD30 | 54 | 58.6 | 15 | 30 | M06x18 | 174 |
| Y709060.0003 | Y709060.VBD40 | 60 | 65 | 15 | 40 | M06x18 | 171 |
| Y709078.0003 | Y709078.VBD50 | 78 | 87 | 19 | 50 | M08x25 | 400 |

**Version Y709 PIN: Bagues en acier inox (Aisi 303).**

| Code | Art. | D | Dmax | B | d1 | DIN 912 | Poids (g) |
|---|---|---|---|---|---|---|---|
| Y709016.0004 | Y709016.IND04PIN | 16 | 20.7 | 9 | 4 | M03x8 | 13.5 |

| Code | Art. | D | Dmax | B | d1 | DIN 912 | Poids (g) |
|---|---|---|---|---|---|---|---|
| Y709016.0005 | Y709016.IND05PIN | 16 | 20.7 | 9 | 5 | M03x8 | 11.5 |
| Y709016.0006 | Y709016.IND06PIN | 16 | 20.7 | 9 | 6 | M03x8 | 10.8 |
| Y709018.0002 | Y709018.IND08PIN | 18 | 22.4 | 9 | 8 | M03x8 | 12.8 |
| Y709024.0002 | Y709024.IND10PIN | 24 | 26 | 9 | 10 | M03x10 | 23 |
| Y709028.0002 | Y709028.IND12PIN | 28 | 31.8 | 11 | 12 | M04x12 | 39 |
| Y709034.0003 | Y709034.IND15PIN | 34 | 39.4 | 13 | 15 | M05x16 | 69 |
| Y709034.0004 | Y709034.IND16PIN | 34 | 39.4 | 13 | 16 | M05x16 | 65 |
| Y709036.0002 | Y709036.IND18PIN | 36 | 41.1 | 13 | 18 | M05x16 | 70.5 |
| Y709040.0002 | Y709040.IND20PIN | 40 | 46.4 | 15 | 20 | M06x18 | 103 |
| Y709042.0002 | Y709042.IND22PIN | 42 | 48.1 | 15 | 22 | M06x18 | 102 |
| Y709045.0002 | Y709045.IND25PIN | 45 | 50.8 | 15 | 25 | M06x18 | 121 |
| Y709048.0002 | Y709048.IND28PIN | 48 | 53.7 | 15 | 28 | M06x18 | 132 |
| Y709054.0002 | Y709054.IND30PIN | 54 | 58.6 | 15 | 30 | M06x18 | 174 |
| Y709060.0002 | Y709060.IND40PIN | 60 | 65 | 15 | 40 | M06x18 | 171 |
| Y709078.0002 | Y709078.IND50PIN | 78 | 87 | 19 | 50 | M08x25 | 400 |

**Version Y709AN : Bagues en aluminium naturel**

| Code | Art. | D | Dmax | B | d1 | DIN 912 | Poids (g) |
|---|---|---|---|---|---|---|---|
| Y709016.0001 | Y709016.AND04 | 16 | 20.7 | 9 | 4 | M03x8 | 5.2 |
| Y709016.0002 | Y709016.AND05 | 16 | 20.7 | 9 | 5 | M03x8 | 5 |
| Y709016.0003 | Y709016.AND06 | 16 | 20.7 | 9 | 6 | M03x8 | 4.6 |
| Y709018.0001 | Y709018.AND08 | 18 | 22.4 | 9 | 8 | M03x8 | 5.3 |
| Y709024.0001 | Y709024.AND10 | 24 | 26 | 9 | 10 | M03x10 | 9.2 |
| Y709028.0001 | Y709028.AND12 | 28 | 31.8 | 11 | 12 | M04x12 | 15 |
| Y709034.0001 | Y709034.AND15 | 34 | 39.4 | 13 | 15 | M05x16 | 27 |
| Y709034.0002 | Y709034.AND16 | 34 | 39.4 | 13 | 16 | M05x16 | 26.5 |
| Y709036.0001 | Y709036.AND18 | 36 | 41.1 | 13 | 18 | M05x16 | 28.5 |
| Y709040.0001 | Y709040.AND20 | 40 | 46.4 | 15 | 20 | M06x18 | 41 |
| Y709042.0001 | Y709042.AND22 | 42 | 48.1 | 15 | 22 | M06x18 | 42.5 |
| Y709045.0001 | Y709045.AND25 | 45 | 50.8 | 15 | 25 | M06x18 | 45.5 |
| Y709048.0001 | Y709048.AND28 | 48 | 53.7 | 15 | 28 | M06x18 | 50 |
| Y709054.0001 | Y709054.AND30 | 54 | 58.6 | 15 | 30 | M06x18 | 66 |
| Y709060.0001 | Y709060.AND40 | 60 | 65 | 15 | 40 | M06x18 | 65 |
| Y709078.0001 | Y709078.AND50 | 78 | 87 | 19 | 50 | M08x25 | 150 |

# Y710

+200° -40° | AVP | Aisi 303 | Al | RoHS COMPLIANT

## 23 BAGUE D'ARRÊT FENDUE EN UNE PARTIE - FORME B - (FORCE DE SERRAGE PLUS ÉLEVÉE +15%)

Anelli di serraggio

**Matériaux (1):**
Y710 :
Acier de décolletage tourné.
Y710PIN :
Acier inox tourné (Aisi 303).
Y710AND :
Aluminium tourné (Al 6060).

**Surface :**
Finement tournée.

**Couleur :**
Y710 :
Brunissage standard.
Y710PIN :
Naturelle.
Y710AND :
Naturelle.

**Vis de fixation (2) :**
Y710 :
N° 1 vis à six pans creux en acier bruni classe 12.9 DIN 912.
Y710PIN - Y710AND :
N° 1 vis à six pans creux en acier inox (Aisi 304) DIN 912.

**ATTENTION :**
Il est recommandé d'exécuter l'arbre avec une tolérance inférieure à la classe h11.

**Demandes spéciales :**
Aucune.

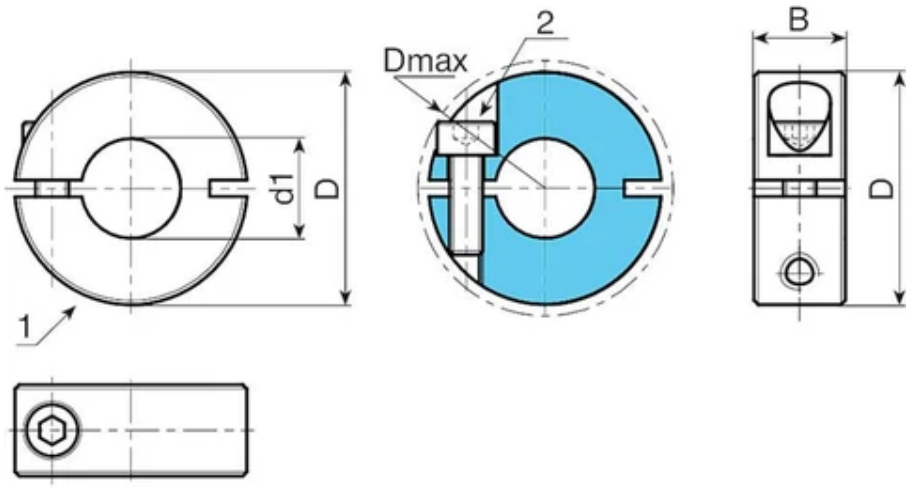


**Version Y710 : Bagues en acier bruni**

| Code | Art. | D | Dmax | B | d1 | DIN 912 | Poids (g) |
|---|---|---|---|---|---|---|---|
| Y710016.0007 | Y710016.VBD04 | 16 | 20.7 | 9 | 4 | M03x8 | 11.8 |
| Y710016.0008 | Y710016.VBD05 | 16 | 20.7 | 9 | 5 | M03x8 | 11.4 |
| Y710016.0009 | Y710016.VBD06 | 16 | 20.7 | 9 | 6 | M03x8 | 10.5 |
| Y710018.0003 | Y710018.VBD08 | 18 | 22.4 | 9 | 8 | M03x8 | 13 |
| Y710024.0003 | Y710024.VBD10 | 24 | 26 | 9 | 10 | M03x10 | 23 |
| Y710028.0003 | Y710028.VBD12 | 28 | 31.8 | 11 | 12 | M04x12 | 39 |
| Y710034.0005 | Y710034.VBD15 | 34 | 39.4 | 13 | 15 | M05x16 | 68.5 |
| Y710034.0006 | Y710034.VBD16 | 34 | 39.4 | 13 | 16 | M05x16 | 64.5 |
| Y710036.0003 | Y710036.VBD18 | 36 | 41.1 | 13 | 18 | M05x16 | 70 |
| Y710040.0003 | Y710040.VBD20 | 40 | 46.4 | 15 | 20 | M06x18 | 103 |
| Y710042.0003 | Y710042.VBD22 | 42 | 48.1 | 15 | 22 | M06x18 | 103 |
| Y710045.0003 | Y710045.VBD25 | 45 | 50.8 | 15 | 25 | M06x18 | 118 |
| Y710048.0003 | Y710048.VBD28 | 48 | 53.7 | 15 | 28 | M06x18 | 129 |
| Y710054.0003 | Y710054.VBD30 | 54 | 58.6 | 15 | 30 | M06x18 | 175 |
| Y710060.0003 | Y710060.VBD40 | 60 | 65 | 15 | 40 | M06x18 | 171 |
| Y710078.0003 | Y710078.VBD50 | 78 | 87 | 19 | 50 | M08x25 | 400 |

**Version Y710 PIN: Bagues en acier inox (Aisi 303).**

| Code | Art. | D | Dmax | B | d1 | DIN 912 | Poids (g) |
|---|---|---|---|---|---|---|---|
| Y710016.0004 | Y710016.IND04PIN | 16 | 20.7 | 9 | 4 | M03x8 | 11.8 |

| Code | Art. | D | Dmax | B | d1 | DIN 912 | Poids (g) |
|---|---|---|---|---|---|---|---|
| Y710016.0005 | Y710016.IND05PIN | 16 | 20.7 | 9 | 5 | M03x8 | 11.4 |
| Y710016.0006 | Y710016.IND06PIN | 16 | 20.7 | 9 | 6 | M03x8 | 10.5 |
| Y710018.0002 | Y710018.IND08PIN | 18 | 22.4 | 9 | 8 | M03x8 | 13 |
| Y710024.0002 | Y710024.IND10PIN | 24 | 26 | 9 | 10 | M03x10 | 23 |
| Y710028.0002 | Y710028.IND12PIN | 28 | 31.8 | 11 | 12 | M04x12 | 39 |
| Y710034.0003 | Y710034.IND15PIN | 34 | 39.4 | 13 | 15 | M05x16 | 68.5 |
| Y710034.0004 | Y710034.IND16PIN | 34 | 39.4 | 13 | 16 | M05x16 | 64.5 |
| Y710036.0002 | Y710036.IND18PIN | 36 | 41.1 | 13 | 18 | M05x16 | 70 |
| Y710040.0002 | Y710040.IND20PIN | 40 | 46.4 | 15 | 20 | M06x18 | 103 |
| Y710042.0002 | Y710042.IND22PIN | 42 | 48.1 | 15 | 22 | M06x18 | 109 |
| Y710045.0002 | Y710045.IND25PIN | 45 | 50.8 | 15 | 25 | M06x18 | 118 |
| Y710048.0002 | Y710048.IND28PIN | 48 | 53.7 | 15 | 28 | M06x18 | 129 |
| Y710054.0002 | Y710054.IND30PIN | 54 | 58.6 | 15 | 30 | M06x18 | 175 |
| Y710060.0002 | Y710060.IND40PIN | 60 | 65 | 15 | 40 | M06x18 | 171 |
| Y710078.0002 | Y710078.IND50PIN | 78 | 87 | 19 | 50 | M08x25 | 400 |

**Version Y710AN : Bagues en aluminium naturel**

| Code | Art. | D | Dmax | B | d1 | DIN 912 | Poids (g) |
|---|---|---|---|---|---|---|---|
| Y710016.0001 | Y710016.AND04 | 16 | 20.7 | 9 | 4 | M03x8 | 5.1 |
| Y710016.0002 | Y710016.AND05 | 16 | 20.7 | 9 | 5 | M03x8 | 5 |
| Y710016.0003 | Y710016.AND06 | 16 | 20.7 | 9 | 6 | M03x8 | 4.6 |
| Y710018.0001 | Y710018.AND08 | 18 | 22.4 | 9 | 8 | M03x8 | 5.3 |
| Y710024.0001 | Y710024.AND10 | 24 | 26 | 9 | 10 | M03x10 | 9.2 |
| Y710028.0001 | Y710028.AND12 | 28 | 31.8 | 11 | 12 | M04x12 | 15 |
| Y710034.0001 | Y710034.AND15 | 34 | 39.4 | 13 | 15 | M05x16 | 27 |
| Y710034.0002 | Y710034.AND16 | 34 | 39.4 | 13 | 16 | M05x16 | 26.5 |
| Y710036.0001 | Y710036.AND18 | 36 | 41.1 | 13 | 18 | M05x16 | 28.5 |
| Y710040.0001 | Y710040.AND20 | 40 | 46.4 | 15 | 20 | M06x18 | 41 |
| Y710042.0001 | Y710042.AND22 | 42 | 48.1 | 15 | 22 | M06x18 | 42.5 |
| Y710045.0001 | Y710045.AND25 | 45 | 50.8 | 15 | 25 | M06x18 | 45.5 |
| Y710048.0001 | Y710048.AND28 | 48 | 53.7 | 15 | 28 | M06x18 | 51 |
| Y710054.0001 | Y710054.AND30 | 54 | 58.6 | 15 | 30 | M06x18 | 66 |
| Y710060.0001 | Y710060.AND40 | 60 | 65 | 15 | 40 | M06x18 | 67 |
| Y710078.0001 | Y710078.AND50 | 78 | 87 | 19 | 50 | M08x25 | 152 |

# Y711

+200° -40° | AVP | Aisi 303 | RoHS COMPLIANT

23

## BAGUE D'ARRÊT AVEC TROU FILETÉ

Anelli di serraggio

**Matériaux (1):**
Y711 :
Acier de décolletage tourné.
Y711PIN :
Acier inox tourné (Aisi 303).

**Surface :**
Finement tournée.

**Couleur :**
Y711 :
Brunissage standard.
Y711PIN :
Naturelle.

**Vis de fixation (2) :**
Y711 :
N° 1 vis à six pans creux en acier bruni classe 12.9 DIN 912.
Y711PIN :
N° 1 vis à six pans creux en acier inox (Aisi 304) DIN 912.

**ATTENTION :**
Il est recommandé d'exécuter l'arbre avec une tolérance inférieure à la classe h11.

**Demandes spéciales :**
Aucune.

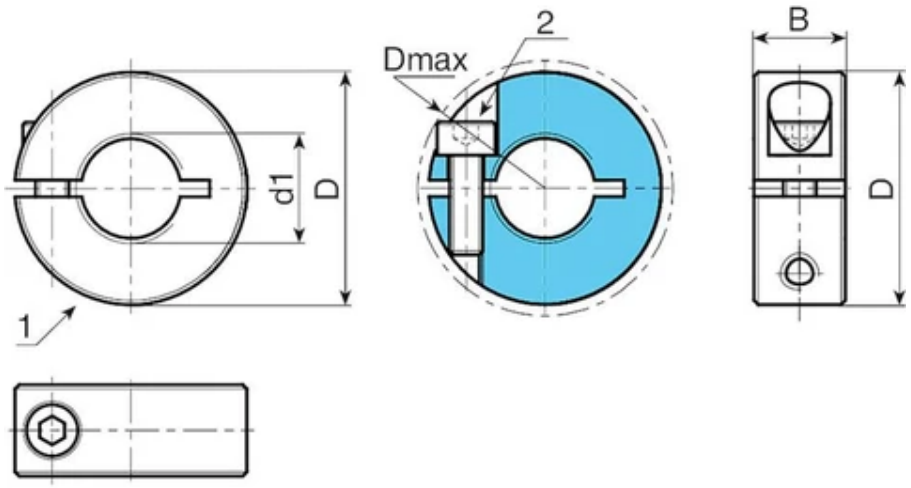


**Version Y711 : Bagues en acier bruni**

| Code | Art. | D | Dmax | B | d1 | DIN 912 | Poids (g) |
|---|---|---|---|---|---|---|---|
| Y711016.0004 | Y711016.VBM04 | 16 | 20,7 | 9 | M4 | M03x8 | 14 |
| Y711016.0005 | Y711016.VBM05 | 16 | 20,7 | 9 | M5 | M03x8 | 13,5 |
| Y711016.0006 | Y711016.VBM06 | 16 | 20,7 | 9 | M6 | M03x8 | 12 |
| Y711018.0002 | Y711018.VBM08 | 18 | 22,4 | 9 | M8 | M03x8 | 15 |
| Y711024.0002 | Y711024.VBM10 | 24 | 26 | 9 | M10 | M03x10 | 24.5 |
| Y711028.0002 | Y711028.VBM12 | 28 | 31,8 | 11 | M12 | M04x12 | 40 |
| Y711034.0002 | Y711034.VBM16 | 34 | 39,4 | 13 | M16 | M05x16 | 71 |
| Y711040.0002 | Y711040.VBM20 | 40 | 46,4 | 15 | M20 | M06x18 | 107 |

**Version Y711 PIN : Bagues en acier inox (Aisi 303).**

| Code | Art. | D | Dmax | B | d1 | DIN 912 | Poids (g) |
|---|---|---|---|---|---|---|---|
| Y711016.0001 | Y711016.INM04PIN | 16 | 20,7 | 9 | M4 | M03x8 | 14 |
| Y711016.0002 | Y711016.INM05PIN | 16 | 20,7 | 9 | M5 | M03x8 | 13,5 |
| Y711016.0003 | Y711016.INM06PIN | 16 | 20,7 | 9 | M6 | M03x8 | 12 |
| Y711018.0001 | Y711018.INM08PIN | 18 | 22,4 | 9 | M8 | M03x8 | 15 |
| Y711024.0001 | Y711024.INM10PIN | 24 | 26 | 9 | M10 | M03x10 | 24.5 |
| Y711028.0001 | Y711028.INM12PIN | 28 | 31,8 | 11 | M12 | M04x12 | 40 |
| Y711034.0001 | Y711034.INM16PIN | 34 | 39,4 | 13 | M16 | M05x16 | 71 |
| Y711040.0001 | Y711040.INM20PIN | 40 | 46,4 | 15 | M20 | M06x18 | 107 |

# Y713

NEW | +135° -30° | PA6.6 | Aisi 316 | RoHS COMPLIANT

## 23 BAGUE D'ARRÊT FENDUE EN DEUX PARTIES RÉALISÉE EN TECHNOPOLYMÈRE

Anelli di serraggio

**Matériaux :**

Technopolymère à base de polyamide 66 renforcé aux fibres de verre et autres composants mineurs.

Résistant aux huiles et aux graisses.

**Surface :**

Satinée.

**Couleur :**

Noir (RAL 9011).

**Inserts :**

(1) N° 2 vis à six pans creux en acier inox (Aisi 316), DIN 912.

(2) N° 2 écrous en acier inox (Aisi 316), DIN 934.

**ATTENTION :**

Il est recommandé d'exécuter l'arbre avec une tolérance inférieure à la classe h11.

**Demandes spéciales :**

Aucune.

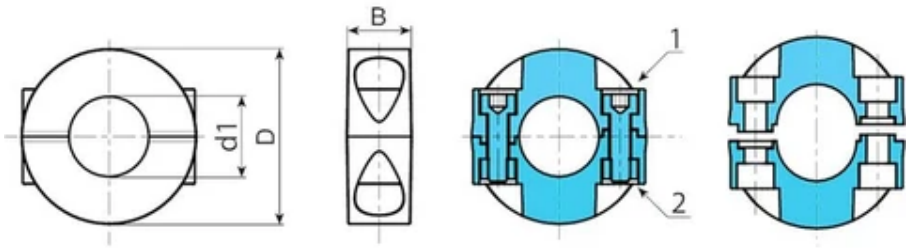


| Code | Art. | D | B | d1 | DIN 912 | Poids (g) |
|---|---|---|---|---|---|---|
| Y713026.0001 | Y713026.TD0301HIN | 26 | 13 | 3 | M4x14 | 17 |
| Y713026.0002 | Y713026.TD0401HIN | 26 | 13 | 4 | M4x14 | 16 |
| Y713026.0003 | Y713026.TD0501HIN | 26 | 13 | 5 | M4x14 | 15 |
| Y713026.0004 | Y713026.TD0601HIN | 26 | 13 | 6 | M4x14 | 14 |
| Y713026.0005 | Y713026.TD0701HIN | 26 | 13 | 7 | M4x14 | 13 |
| Y713035.0001 | Y713035.TD0801HIN | 35 | 13 | 8 | M4x16 | 25 |
| Y713035.0002 | Y713035.TD0901HIN | 35 | 13 | 9 | M4x16 | 24 |
| Y713035.0003 | Y713035.TD1001HIN | 35 | 13 | 10 | M4x16 | 23 |
| Y713035.0004 | Y713035.TD1101HIN | 35 | 13 | 11 | M4x16 | 22 |
| Y713035.0005 | Y713035.TD1201HIN | 35 | 13 | 12 | M4x16 | 21 |
| Y713035.0006 | Y713035.TD1301HIN | 35 | 13 | 13 | M4x16 | 20 |
| Y713035.0007 | Y713035.TD1401HIN | 35 | 13 | 14 | M4x16 | 19 |
| Y713035.0008 | Y713035.TD1501HIN | 35 | 13 | 15 | M4x16 | 18 |
| Y713040.0001 | Y713040.TD1601HIN | 40 | 14 | 16 | M4x16 | 21 |
| Y713040.0002 | Y713040.TD1701HIN | 40 | 14 | 17 | M4x16 | 20,5 |
| Y713040.0003 | Y713040.TD1801HIN | 40 | 14 | 18 | M4x16 | 20 |
| Y713040.0004 | Y713040.TD1901HIN | 40 | 14 | 19 | M4x16 | 19 |
| Y713040.0005 | Y713040.TD2001HIN | 40 | 14 | 20 | M4x16 | 18 |
| Y713050.0001 | Y713050.TD2101HIN | 50 | 14 | 21 | M5x20 | 34 |
| Y713050.0002 | Y713050.TD2201HIN | 50 | 14 | 22 | M5x20 | 33 |
| Y713050.0003 | Y713050.TD2301HIN | 50 | 14 | 23 | M5x20 | 32,5 |
| Y713050.0004 | Y713050.TD2401HIN | 50 | 14 | 24 | M5x20 | 32 |

| Code | Art. | D | B | d1 | DIN 912 | Poids (g) |
|---|---|---|---|---|---|---|
| Y713050.0005 | Y713050.TD2501HIN | 50 | 14 | 25 | M5x20 | 31 |
| Y713050.0006 | Y713050.TD2601HIN | 50 | 14 | 26 | M5x20 | 30,5 |
| Y713050.0007 | Y713050.TD2801HIN | 50 | 14 | 28 | M5x20 | 30 |
| Y713050.0008 | Y713050.TD3001HIN | 50 | 14 | 30 | M5x20 | 29 |
| Y713065.0001 | Y713065.TD3201HIN | 65 | 14 | 32 | M5x20 | 45 |
| Y713065.0002 | Y713065.TD3401HIN | 65 | 14 | 34 | M5x20 | 44 |
| Y713065.0003 | Y713065.TD3501HIN | 65 | 14 | 35 | M5x20 | 43 |
| Y713065.0004 | Y713065.TD3601HIN | 65 | 14 | 36 | M5x20 | 42 |
| Y713065.0005 | Y713065.TD3801HIN | 65 | 14 | 38 | M5x20 | 41 |
| Y713065.0006 | Y713065.TD4001HIN | 65 | 14 | 40 | M5x20 | 40 |
| Y713075.0001 | Y713075.TD4201HIN | 75 | 14 | 42 | M5x20 | 53,5 |
| Y713075.0002 | Y713075.TD4501HIN | 75 | 14 | 45 | M5x20 | 50 |
| Y713075.0003 | Y713075.TD4801HIN | 75 | 14 | 48 | M5x20 | 47,5 |
| Y713075.0004 | Y713075.TD5001HIN | 75 | 14 | 50 | M5x20 | 45 |

# Y718

+200° -40° | C40 | RoHS COMPLIANT

23

## JOINT À ROTULE ANGULAIRE EN ACIER - DIN 71802 - FORME C

Giunti angolari

**Matériaux :**

Acier avec classe de résistance 5.8.

**Surface :**

Usinée au tour à faible rugosité.

**Couleur :**

Zingage bleu standard.

**Inserts :**

(1) Joint à rotule en acier avec trou fileté.

(3) Bague de retenue élastique en acier à ressort.

(4) Écrou avec trou fileté en acier (DIN 934).

(2) Insert sphérique avec logement pour clé fraisé et goujon fileté en acier réalisé dans la masse (tolérance filetage 6g).

Version standard :

Filetage à droite (tolérance filetage 6H).

Version SX (gauche) :

Filetage à gauche (tolérance filetage 6H). Identifiable par la présence de la gorge sur la rotule.

**Demandes spéciales :**

Aucune.

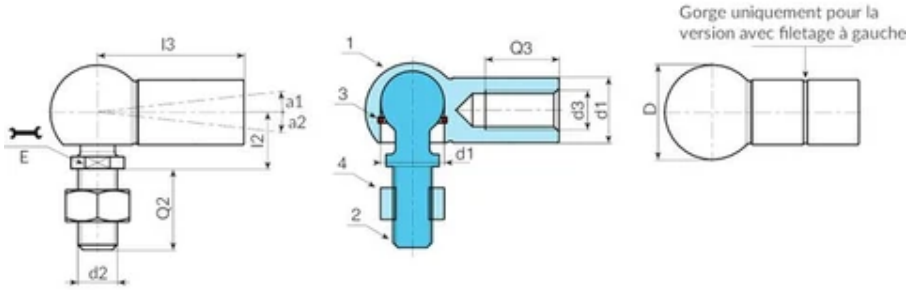


**Version 718 - joint avec filetage standard**

| Code | Art. | d2 6g | d3 6H | D | E | l2 | l3 | Q2 | d1#r# h9-H9 | Q3 | a1 | a2 | Poids (g) |
|---|---|---|---|---|---|---|---|---|---|---|---|---|---|
| Y71808.0001 | Y71808.VZM05 | M5 | M5 | 12,8 | 7 | 9 | 22 | 10,2 | 8 | 10,2 | 18 | 18 | 15 |
| Y71810.0001 | Y71810.VZM06 | M6 | M6 | 14,8 | 8 | 11 | 25 | 11,5 | 10 | 11,5 | 18 | 18 | 25 |
| Y71813.0001 | Y71813.VZM08 | M8 | M8 | 19,3 | 11 | 13 | 30 | 14 | 13 | 14 | 18 | 18 | 53 |
| Y71816.0001 | Y71816.VZM10 | M10 | M10 | 24 | 13 | 16 | 35 | 15,5 | 16 | 15,5 | 18 | 18 | 104 |
| Y71819.0001 | Y71819.VZM14X1.5 | M14X1,5 | M14X1,5 | 30 | 16 | 20 | 45 | 21,5 | 19 | 21,5 | - | 15 | 221 |

**Version 718 - joint avec filetage GAUCHE**

| Code | Art. | d2 6g | d3 6H | D | E | l2 | l3 | Q2 | d1#r# h9-H9 | Q3 | a1 | a2 | Poids (g) |
|---|---|---|---|---|---|---|---|---|---|---|---|---|---|
| Y71808.0002 | Y71808.VZM05SX | M5 | M5 SX | 12.8 | 7 | 9 | 22 | 10,2 | 8 | 10,2 | 18 | 18 | 15 |
| Y71810.0002 | Y71810.VZM06SX | M6 | M6 SX | 14.8 | 8 | 11 | 25 | 11,5 | 10 | 11,5 | 18 | 18 | 25 |
| Y71813.0002 | Y71813.VZM08SX | M8 | M8 SX | 19,3 | 11 | 13 | 30 | 14 | 13 | 14 | 18 | 18 | 53 |
| Y71816.0002 | Y71816.VZM10SX | M10 | M10 SX | 24 | 13 | 16 | 35 | 15,5 | 16 | 15,5 | 18 | 18 | 104 |
| Y71819.0002 | Y71819.VZM14X1.5SX | M14X1,5 | M14X1,5 SX | 30 | 16 | 20 | 45 | 21,5 | 19 | 21,5 | 18 | 18 | 221 |

# Y719

+200° -40° | C40 | Aisi 303 | RoHS COMPLIANT

23

## JOINT À ROTULE ANGULAIRE EN ACIER AVEC SYSTÈME DE SÉCURITÉ SUR BILLE - DIN 71802 - FORME CS

Giunti angolari

**Matériaux :**

Y719 :

Acier avec classe de résistance 5.8.

Y719CIN :

Acier inox (Aisi 303).

**Surface :**

Usinée au tour à faible rugosité.

**Couleur :**

Y719 :

Zingage bleu standard.

Y719CIN :

Naturelle.

**Inserts :**

(2) Insert sphérique avec logement pour clé fraisé et goujon fileté réalisé dans la masse (tolérance filetage 6g).

Y719 : en acier - Y719CIN : en acier inox (Aisi 303).

(3) Bague de retenue élastique en acier à ressort.

(4) Écrou avec trou fileté (DIN 934).

Y719 : en acier - Y719CIN : en acier inox (Aisi 304).

(5) Sécurité anti-dégagement réalisée avec un ressort profilé. (Y719 : en acier à ressort) (Y719CIN : en acier inox naturel).

(1) Joint à rotule avec trou fileté et trou pour ressort de sécurité.

Y719 : en acier - Y719CIN : en acier inox (Aisi 303).

Version standard :

Filetage à droite (tolérance filetage 6H).

Version SX (gauche) :

Filetage à gauche (tolérance filetage 6H). Identifiable par la présence de la gorge sur la rotule.

**Demandes spéciales :**

Aucune.

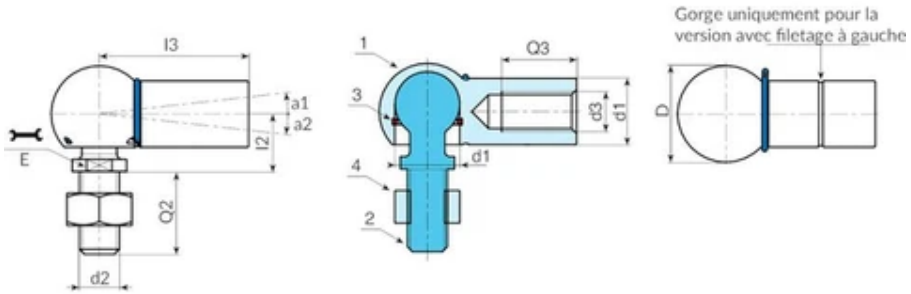


**Version 719 - joint avec filetage standard**

| Code | Art. | d2 6g | d3 6H | D | E | l2 | l3 | Q2 | d1#r# h9-H9 | Q3 | a1 | a2 | Poids (g) |
|---|---|---|---|---|---|---|---|---|---|---|---|---|---|
| Y71908.0003 | Y71908.VZM05 | M5 | M5 | 12,8 | 7 | 9 | 22 | 10,2 | 8 | 10,2 | 18 | 10 | 15 |
| Y71910.0003 | Y71910.VZM06 | M6 | M6 | 14,8 | 8 | 11 | 25 | 11,5 | 10 | 11,5 | 18 | 15 | 25 |
| Y71913.0003 | Y71913.VZM08 | M8 | M8 | 19,3 | 11 | 13 | 30 | 14 | 13 | 14 | 18 | 15 | 53 |
| Y71916.0003 | Y71916.VZM10 | M10 | M10 | 24 | 13 | 16 | 35 | 15,5 | 16 | 15,5 | 18 | 15 | 104 |
| Y71919.0003 | Y71919.VZM14X1.5 | M14X1,5 | M14X1,5 | 30 | 16 | 20 | 45 | 21,5 | 19 | 21,5 | 18 | 15 | 221 |

**Version 719 - joint avec filetage GAUCHE**

| Code | Art. | d2 6g | d3 6H | D | E | l2 | l3 | Q2 | d1#r# h9-H9 | Q3 | a1 | a2 | Poids (g) |
|---|---|---|---|---|---|---|---|---|---|---|---|---|---|
| Y71908.0004 | Y71908.VZM05SX | M5 | M5 SX | 12,8 | 7 | 9 | 22 | 10,2 | 8 | 10,2 | 18 | 10 | 15 |
| Y71910.0004 | Y71910.VZM06SX | M6 | M6 SX | 14,8 | 8 | 11 | 25 | 11,5 | 10 | 11,5 | 18 | 15 | 25 |
| Y71913.0004 | Y71913.VZM08SX | M8 | M8 SX | 19,3 | 11 | 13 | 30 | 14 | 13 | 14 | 18 | 15 | 53 |
| Y71916.0004 | Y71916.VZM10SX | M10 | M10 SX | 24 | 13 | 16 | 35 | 15,5 | 16 | 15,5 | 18 | 15 | 104 |
| Y71919.0004 | Y71919.VZM14X1.5SX | M14X1,5 | M14X1,5 SX | 30 | 16 | 20 | 45 | 21,5 | 19 | 21,5 | 18 | 15 | 221 |

**Version 719CIN - joint avec filetage standard - INOX**

| Code | Art. | d2 6g | d3 6H | D | E | l2 | l3 | Q2 | d1#r# h9-H9 | Q3 | a1 | a2 | Poids (g) |
|---|---|---|---|---|---|---|---|---|---|---|---|---|---|
| Y71908.0001 | Y71908.INM05CIN | M5 | M5 | 12.8 | 7 | 9 | 22 | 10,2 | 8 | 10,2 | 18 | 10 | 15 |
| Y71910.0001 | Y71910.INM06CIN | M6 | M6 | 14,8 | 8 | 11 | 25 | 11,5 | 10 | 11,5 | 18 | 15 | 25 |
| Y71913.0001 | Y71913.INM08CIN | M8 | M8 | 19,3 | 11 | 13 | 30 | 14 | 13 | 14 | 18 | 15 | 53 |

| Code | Art. | d2 6g | d3 6H | D | E | l2 | l3 | Q2 | d1#r# h9-H9 | Q3 | a1 | a2 | Poids (g) |
|---|---|---|---|---|---|---|---|---|---|---|---|---|---|
| Y71916.0001 | Y71916.INM10CIN | M10 | M10 | 24 | 13 | 16 | 35 | 15,5 | 16 | 15,5 | 18 | 15 | 104 |
| Y71919.0001 | Y71919.INM14X1.5CIN | M14X1,5 | M14X1,5 | 30 | 16 | 20 | 45 | 21,5 | 19 | 21,5 | 18 | 15 | 221 |

**Version 719CIN - joint avec filetage GAUCHE - INOX**

| Code | Art. | d2 6g | d3 6H | D | E | l2 | l3 | Q2 | d1#r# h9-H9 | Q3 | a1 | a2 | Poids (g) |
|---|---|---|---|---|---|---|---|---|---|---|---|---|---|
| Y71908.0002 | Y71908.INM05SXCIN | M5 | M5 SX | 12,8 | 7 | 9 | 22 | 10,2 | 8 | 10,2 | 18 | 10 | 15 |
| Y71910.0002 | Y71910.INM06SXCIN | M6 | M6 SX | 14,8 | 8 | 11 | 25 | 11,5 | 10 | 11,5 | 18 | 15 | 25 |
| Y71913.0002 | Y71913.INM08SXCIN | M8 | M8 SX | 19,3 | 11 | 13 | 30 | 14 | 13 | 14 | 18 | 15 | 53 |
| Y71916.0002 | Y71916.INM10SXCIN | M10 | M10 SX | 24 | 13 | 16 | 35 | 15,5 | 16 | 15,5 | 18 | 15 | 104 |
| Y71919.0002 | Y71919.INM14X1.5SXCIN | M14X1,5 | M14X1,5 SX | 30 | 16 | 20 | 45 | 21,5 | 19 | 21,5 | 18 | 15 | 221 |