Y379

+200° -20° | 39 NiCr | Aisi 304 | RoHS COMPLIANT

23

DIN ISO 7379 - SHOULDER SCREW

Viti DIN 7379

Materials:

Y379:

Untreated steel with strength class 12.9.

Y379 CIN:

Untreated stainless steel (Aisi 304).

Surface finish:

Smooth.

Colour:

Y379:

Black-oxide treated.

Y379 CIN:

Natural.

Processing:

Ground stud (tolerance f9), partially threaded (tolerance 6g) with hexagon socket head.

Special requests:

None.

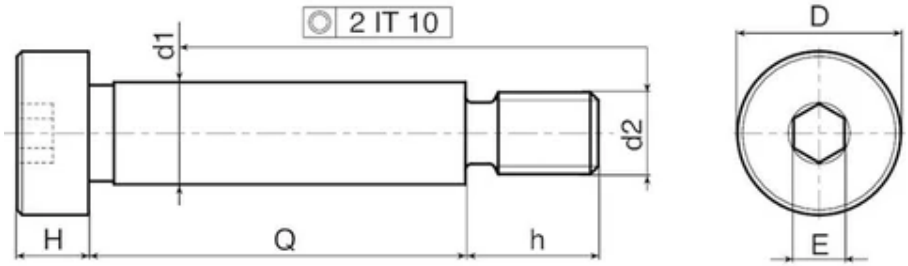

Version Y379 - black-oxide treated steel

Code	art.	D	d2|6g|	H	h	E	d1|f9|	Q	Weight (g)
Y37904.0006	Y37904.SBM03X06	7	M3	3	7	2	4	06	1,6
Y37904.0007	Y37904.SBM03X08	7	M3	3	7	2	4	08	1,8
Y37904.0008	Y37904.SBM03X10	7	M3	3	7	2	4	10	2
Y37904.0009	Y37904.SBM03X12	7	M3	3	7	2	4	12	2,2
Y37904.0010	Y37904.SBM03X16	7	M3	3	7	2	4	16	2,5
Y37904.0011	Y37904.SBM03X20	7	M3	3	7	2	4	20	3
Y37905.0007	Y37905.SBM04X08	9	M4	4	8	2,5	5	08	3,6
Y37905.0008	Y37905.SBM04X10	9	M4	4	8	2,5	5	10	3,8
Y37905.0009	Y37905.SBM04X16	9	M4	4	8	2,5	5	16	4,8
Y37905.0010	Y37905.SBM04X20	9	M4	4	8	2,5	5	20	5,3
Y37905.0011	Y37905.SBM04X30	9	M4	4	8	2,5	5	30	6,7
Y37905.0012	Y37905.SBM04X40	9	M4	4	8	2,5	5	40	8,8
Y37906.0007	Y37906.SBM05X16	10	M5	4,5	9,5	3	6	16	6,9
Y37906.0008	Y37906.SBM05X20	10	M5	4,5	9,5	3	6	20	7,7
Y37906.0009	Y37906.SBM05X25	10	M5	4,5	9,5	3	6	25	8,9
Y37906.0010	Y37906.SBM05X30	10	M5	4,5	9,5	3	6	30	10
Y37906.0011	Y37906.SBM05X40	10	M5	4,5	9,5	3	6	40	10,4
Y37906.0012	Y37906.SBM05X50	10	M5	4,5	9,5	3	6	50	14
Y37906.0013	Y37906.SBM05X60	10	M5	4,5	9,5	3	6	60	16.5
Y37908.0008	Y37908.SBM06X16	13	M6	5,5	11	4	8	16	12,8
Y37908.0009	Y37908.SBM06X20	13	M6	5,5	11	4	8	20	14,3

Code	art.	D	d2|6g|	H	h	E	d1|f9|	Q	Weight (g)
Y37908.0010	Y37908.SBM06X25	13	M6	5,5	11	4	8	25	16,3
Y37908.0011	Y37908.SBM06X30	13	M6	5,5	11	4	8	30	18
Y37908.0012	Y37908.SBM06X40	13	M6	5,5	11	4	8	40	22
Y37908.0013	Y37908.SBM06X50	13	M6	5,5	11	4	8	50	26
Y37908.0014	Y37908.SBM06X60	13	M6	5,5	11	4	8	60	30
Y37910.0010	Y37910.SBM08X16	16	M8	7	13	5	10	16	23
Y37910.0011	Y37910.SBM08X20	16	M8	7	13	5	10	20	25
Y37910.0012	Y37910.SBM08X25	16	M8	7	13	5	10	25	28
Y37910.0013	Y37910.SBM08X30	16	M8	7	13	5	10	30	31
Y37910.0014	Y37910.SBM08X40	16	M8	7	13	5	10	40	38
Y37910.0015	Y37910.SBM08X50	16	M8	7	13	5	10	50	44
Y37910.0016	Y37910.SBM08X60	16	M8	7	13	5	10	60	50
Y37910.0017	Y37910.SBM08X70	16	M8	7	13	5	10	70	56
Y37910.0018	Y37910.SBM08X80	16	M8	7	13	5	10	80	62
Y37912.0013	Y37912.SBM10X16	18	M10	9	16	6	12	16	36
Y37912.0014	Y37912.SBM10X20	18	M10	9	16	6	12	20	40
Y37912.0015	Y37912.SBM10X25	18	M10	9	16	6	12	25	45
Y37912.0016	Y37912.SBM10X30	18	M10	9	16	6	12	30	50
Y37912.0017	Y37912.SBM10X40	18	M10	9	16	6	12	40	55
Y37912.0018	Y37912.SBM10X50	18	M10	9	16	6	12	50	65
Y37912.0019	Y37912.SBM10X60	18	M10	9	16	6	12	60	75
Y37912.0020	Y37912.SBM10X70	18	M10	9	16	6	12	70	85
Y37912.0021	Y37912.SBM10X80	18	M10	9	16	6	12	80	93
Y37912.0022	Y37912.SBM10X90	18	M10	9	16	6	12	90	102
Y37912.0012	Y37912.SBM10X100	18	M10	9	16	6	12	100	112
Y37916.0012	Y37916.SBM12X30	24	M12	11	18	8	16	30	92
Y37916.0013	Y37916.SBM12X40	24	M12	11	18	8	16	40	108
Y37916.0014	Y37916.SBM12X50	24	M12	11	18	8	16	50	124
Y37916.0015	Y37916.SBM12X60	24	M12	11	18	8	16	60	140
Y37916.0016	Y37916.SBM12X70	24	M12	11	18	8	16	70	156
Y37916.0017	Y37916.SBM12X80	24	M12	11	18	8	16	80	171
Y37916.0018	Y37916.SBM12X90	24	M12	11	18	8	16	90	186
Y37916.0010	Y37916.SBM12X100	24	M12	11	18	8	16	100	203
Y37916.0011	Y37916.SBM12X120	24	M12	11	18	8	16	120	233
Y37920.0012	Y37920.SBM16X30	30	M16	14	22	10	20	30	167
Y37920.0013	Y37920.SBM16X40	30	M16	14	22	10	20	40	193
Y37920.0014	Y37920.SBM16X50	30	M16	14	22	10	20	50	218
Y37920.0015	Y37920.SBM16X60	30	M16	14	22	10	20	60	242
Y37920.0016	Y37920.SBM16X70	30	M16	14	22	10	20	70	266
Y37920.0017	Y37920.SBM16X80	30	M16	14	22	10	20	80	290

Code	art.	D	d2|6g|	H	h	E	d1|f9|	Q	Weight (g)
Y37920.0018	Y37920.SBM16X90	30	M16	14	22	10	20	90	315
Y37920.0010	Y37920.SBM16X100	30	M16	14	22	10	20	100	340
Y37920.0011	Y37920.SBM16X120	30	M16	14	22	10	20	120	389

Version Y379 CIN - stainless steel (Aisi 304)

Code	art.	D	d2|6g|	H	h	E	d1|f9|	Q	Weight (g)
Y37904.0001	Y37904.INM03X06CIN	7	M3	3	7	2	4	06	1,6
Y37904.0002	Y37904.INM03X08CIN	7	M3	3	7	2	4	08	1,8
Y37904.0003	Y37904.INM03X10CIN	7	M3	3	7	2	4	10	2
Y37904.0004	Y37904.INM03X16CIN	7	M3	3	7	2	4	16	2,2
Y37904.0005	Y37904.INM03X20CIN	7	M3	3	7	2	4	20	2,5
Y37905.0001	Y37905.INM04X08CIN	9	M4	4	8	2,5	5	08	3,6
Y37905.0002	Y37905.INM04X10CIN	9	M4	4	8	2,5	5	10	3,8
Y37905.0003	Y37905.INM04X16CIN	9	M4	4	8	2,5	5	16	4,8
Y37905.0004	Y37905.INM04X20CIN	9	M4	4	8	2,5	5	20	5,3
Y37905.0005	Y37905.INM04X30CIN	9	M4	4	8	2,5	5	30	6,7
Y37905.0006	Y37905.INM04X40CIN	9	M4	4	8	2,5	5	40	8,8
Y37906.0001	Y37906.INM05X16CIN	10	M5	4,5	9,5	3	6	16	6,9
Y37906.0002	Y37906.INM05X20CIN	10	M5	4,5	9,5	3	6	20	7,7
-	Y37906.INM05X25CIN	10	M5	4,5	9,5	3	6	25	8,9
Y37906.0003	Y37906.INM05X30CIN	10	M5	4,5	9,5	3	6	30	10
Y37906.0004	Y37906.INM05X40CIN	10	M5	4,5	9,5	3	6	40	10,4
Y37906.0005	Y37906.INM05X50CIN	10	M5	4,5	9,5	3	6	50	14
Y37906.0006	Y37906.INM05X60CIN	10	M5	4,5	9,5	3	6	60	16.5
Y37908.0001	Y37908.INM06X16CIN	13	M6	5,5	11	4	8	16	12,8
Y37908.0002	Y37908.INM06X20CIN	13	M6	5,5	11	4	8	20	14,3
Y37908.0003	Y37908.INM06X25CIN	13	M6	5,5	11	4	8	25	16,3
Y37908.0004	Y37908.INM06X30CIN	13	M6	5,5	11	4	8	30	18
Y37908.0005	Y37908.INM06X40CIN	13	M6	5,5	11	4	8	40	22
Y37908.0006	Y37908.INM06X50CIN	13	M6	5,5	11	4	8	50	26
Y37908.0007	Y37908.INM06X60CIN	13	M6	5,5	11	4	8	60	30
Y37910.0001	Y37910.INM08X16CIN	16	M8	7	13	5	10	16	23
Y37910.0002	Y37910.INM08X20CIN	16	M8	7	13	5	10	20	25
Y37910.0003	Y37910.INM08X25CIN	16	M8	7	13	5	10	25	28
Y37910.0004	Y37910.INM08X30CIN	16	M8	7	13	5	10	30	31
Y37910.0005	Y37910.INM08X40CIN	16	M8	7	13	5	10	40	38
Y37910.0006	Y37910.INM08X50CIN	16	M8	7	13	5	10	50	44
Y37910.0007	Y37910.INM08X60CIN	16	M8	7	13	5	10	60	50
Y37910.0008	Y37910.INM08X70CIN	16	M8	7	13	5	10	70	56
Y37910.0009	Y37910.INM08X80CIN	16	M8	7	13	5	10	80	62

Code	art.	D	d2|6g|	H	h	E	d1|f9|	Q	Weight (g)
Y37912.0002	Y37912.INM10X16CIN	18	M10	9	16	6	12	16	36
Y37912.0003	Y37912.INM10X20CIN	18	M10	9	16	6	12	20	40
Y37912.0004	Y37912.INM10X25CIN	18	M10	9	16	6	12	25	45
Y37912.0005	Y37912.INM10X30CIN	18	M10	9	16	6	12	30	50
Y37912.0006	Y37912.INM10X40CIN	18	M10	9	16	6	12	40	55
Y37912.0007	Y37912.INM10X50CIN	18	M10	9	16	6	12	50	65
Y37912.0008	Y37912.INM10X60CIN	18	M10	9	16	6	12	60	75
Y37912.0009	Y37912.INM10X70CIN	18	M10	9	16	6	12	70	85
Y37912.0010	Y37912.INM10X80CIN	18	M10	9	16	6	12	80	93
Y37912.0011	Y37912.INM10X90CIN	18	M10	9	16	6	12	90	102
Y37912.0001	Y37912.INM10X100CIN	18	M10	9	16	6	12	100	112
Y37916.0003	Y37916.INM12X30CIN	24	M12	11	18	8	16	30	92
Y37916.0004	Y37916.INM12X40CIN	24	M12	11	18	8	16	40	108
Y37916.0005	Y37916.INM12X50CIN	24	M12	11	18	8	16	50	124
Y37916.0006	Y37916.INM12X60CIN	24	M12	11	18	8	16	60	140
Y37916.0007	Y37916.INM12X70CIN	24	M12	11	18	8	16	70	156
Y37916.0008	Y37916.INM12X80CIN	24	M12	11	18	8	16	80	171
Y37916.0009	Y37916.INM12X90CIN	24	M12	11	18	8	16	90	186
Y37916.0001	Y37916.INM12X100CIN	24	M12	11	18	8	16	100	203
Y37916.0002	Y37916.INM12X120CIN	24	M12	11	18	8	16	120	233
Y37920.0003	Y37920.INM16X30CIN	30	M16	14	22	10	20	30	167
Y37920.0004	Y37920.INM16X40CIN	30	M16	14	22	10	20	40	193
Y37920.0005	Y37920.INM16X50CIN	30	M16	14	22	10	20	50	218
Y37920.0006	Y37920.INM16X60CIN	30	M16	14	22	10	20	60	242
Y37920.0007	Y37920.INM16X70CIN	30	M16	14	22	10	20	70	266
Y37920.0008	Y37920.INM16X80CIN	30	M16	14	22	10	20	80	290
Y37920.0009	Y37920.INM16X90CIN	30	M16	14	22	10	20	90	315
Y37920.0001	Y37920.INM16X100CIN	30	M16	14	22	10	20	100	340
Y37920.0002	Y37920.INM16X120CIN	30	M16	14	22	10	20	120	389

Y442

+200° -40° AVP RoHS COMPLIANT

23

STEEL EYELET END FITTING

Componenti vari DIN

Materials:

Steel with strength class 5.8.

Surface finish:

Fine turned finish.

Colour:

Standard black-oxide treatment.

Hole:

(d1) Female threaded hole machined from solid metal (thread tolerance 6H).

(d2) Smooth through hole machined from solid metal (hole tolerance H7).

Special Requests:

On request the product can be supplied with galvanised finish, (code no.: Y442018.VZM06 - attention: hole tolerance H9).

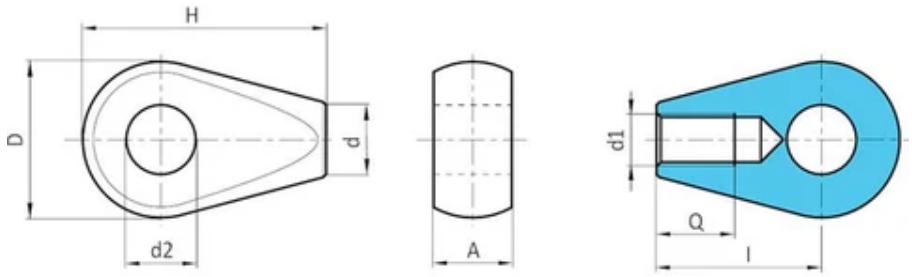

Code	art.	D -0.3	H	A -0.15	l	d	d2 H7	d1 6H	Q +1	Weight (g)
Y44218.0001	Y44218.SBM06	18	37	9	19	8,5	7,1	M6	9	1,4

Y508

+200° -20° | C40 | RoHS COMPLIANT

23

DIN 508 - T-SHAPED STEEL NUT FOR SLOTS

Volantini e Leve DIN

Materials:
Steel with class 8 tensile strength.

Surface finish:
Smooth.

Colour:
Black-oxide treated.

Hole:
Threaded through hole (thread tolerance 6H).

Special requests:
The product can be supplied with galvanised finish. Replace the "SBM" portion of the code with "SZM".

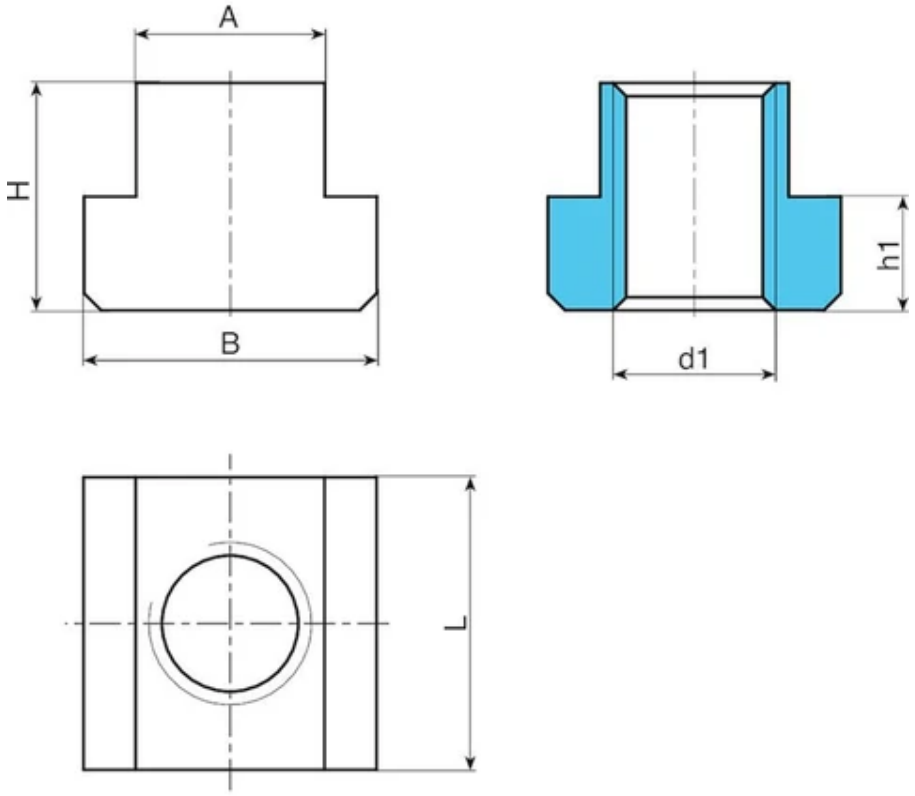

Code	art.	A -0,3/+0,5	B -0,5	L -0,5	h1 -0,5	H	T slot DIN508	d1 6H	Weight (g)
Y508005.0001	Y508005.SBM0408	5	9	9	3	5,5	5	M4	2
Y508006.0001	Y508006.SBM0508	6	10	10	4	8	6	M5	4
Y508008.0001	Y508008.SBM0608	8	13	13	6	10	8	M6	8
Y508010.0001	Y508010.SBM0808	9,5	16	20	6,5	12	10	M8	12

Code	art.	A -0,3/+0,5	B -0,5	L -0,5	h1 -0,5	H	T slot DIN508	d1 6H	Weight (g)
Y508012.0001	Y508012.SBM1008	12	19	22	6,5	12	12	M10	20
Y508014.0001	Y508014.SBM1208	14	22	26	8	16	14	M12	34
Y508018.0001	Y508018.SBM1608	18	28	30	10,5	20	18	M16	62
Y508022.0001	Y508022.SBM2008	22	35	39	14,5	27	22	M20	149
Y508028.0001	Y508028.SBM2408	27	41	42,5	17	33,5	28	M24	314
Y508036.0001	Y508036.SBM3008	35	53	53	22,5	44	36	M30	586

Y631

+200° -20° | 39 NiCr | Aisi 303 | RoHS COMPLIANT

23

DIN 6311 - S DESIGN - STEEL BASE WITH RING FOR STUD DIN 6332

Piedi e perni di spinta DIN

Materials:

Y631:

Case-hardened base.

(1) Harmonic steel retaining ring.

Y631 CIN:

Stainless steel base (Aisi 303).

(1) Stainless steel retaining ring (Aisi 302).

Surface finish:

Y631:

Case-hardened.

Y631 CIN:

Natural, untreated.

Colour:

Y631:

Black-oxide treatment.

Y631 CIN:

Natural.

Special requests:

Upon request and for special quantities the base can be supplied with a low T design and a larger clamping surface.

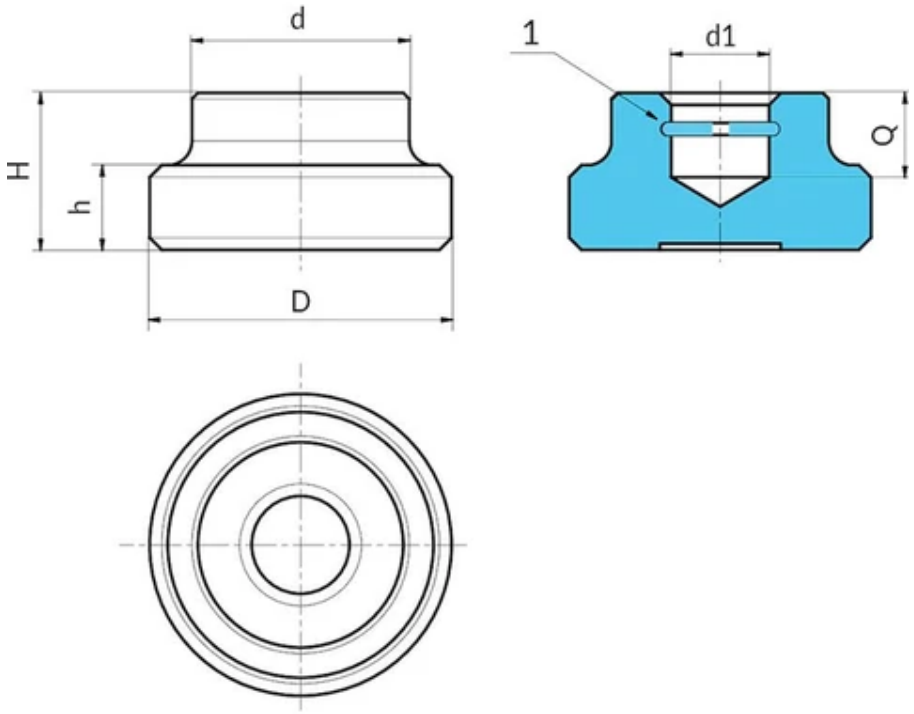

Code	art.	D	d	H	h	for pins DIN 6332	d1 H12	Q	Weight (g)
Y631012.0002	Y631012.SBD04.6	12	10	7	2.5	M06	4.6	4	4
Y631016.0002	Y631016.SBD06.1	16	12	9	4	M08	6.1	5	9
Y631020.0002	Y631020.SBD08.1	20	15	11	5	M10	8.1	6	12
Y631025.0002	Y631025.SBD08.1	25	18	13	7	M12	8.1	7	34
Y631032.0002	Y631032.SBD12.1	32	22	15	7	M16	12.1	7.5	57
Y631040.0002	Y631040.SBD15.6	40	28	16	9	M20	15.6	8	103

Code	art.	D	d	H	h	for pins DIN 6332	d1 H12	Q	Weight (g)
Y631012.0001	Y631012.IND04.6CIN	12	10	7	2.5	M06	4.6	4	4
Y631016.0001	Y631016.IND06.1CIN	16	12	9	4	M08	6.1	5	9
Y631020.0001	Y631020.IND08.1CIN	20	15	11	5	M10	8.1	6	12
Y631025.0001	Y631025.IND08.1CIN	25	18	13	7	M12	8.1	7	34
Y631032.0001	Y631032.IND12.1CIN	32	22	15	7	M16	12.1	7.5	57
Y631040.0001	Y631040.IND15.6CIN	40	28	16	9	M20	15.6	8	103

Y633

+200° -20° | 39 NiCr | Aisi 303 | RoHS COMPLIANT

23

DIN 6332 - THREADED STUD WITH STEEL NOSE FOR THRUST PAD DIN 6311

Piedi e perni di spinta DIN

Materials:

Y633:

Steel threaded stud, with slot end and case-hardened nose.

Y633 CIN:

Stainless steel threaded stud (Aisi 303), with slot end and nose.

Surface finish:

Turned.

Colour:

Y633:

Black-oxide treated.

Y633 CIN:

Natural.

Special requests:

None.

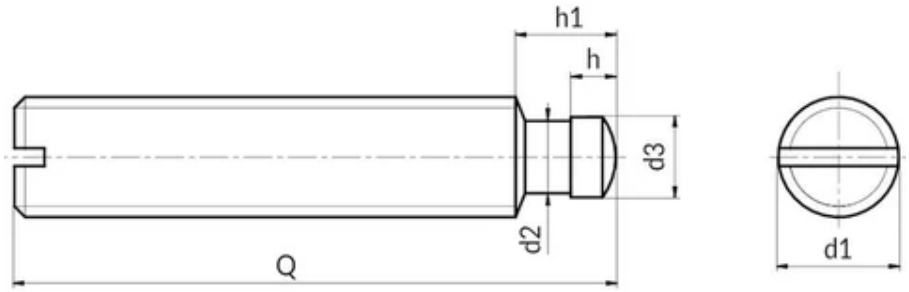

Version Y633 - black-oxide treated steel

Code	art.	d1 6g	d2	d3	h	h1	h2	for thrust pads DIN 6311	Q	Weight (g)
Y633.0033	Y633.SBM06X035	M6	4	4,5	2,5	6	2,2	12	035	5,5
Y633.0033	Y633.SBM06X040	M6	4	4,5	2,5	6	2,2	12	040	6
Y633.0033	Y633.SBM06X050	M6	4	4,5	2,5	6	2,2	12	050	8
Y633.0038	Y633.SBM08X040	M8	5,4	6	3	7,5	3	16	040	11
Y633.0038	Y633.SBM08X045	M8	5,4	6	3	7,5	3	16	045	13
Y633.0038	Y633.SBM08X050	M8	5,4	6	3	7,5	3	16	050	14
Y633.0038	Y633.SBM08X060	M8	5,4	6	3	7,5	3	16	060	17,5
Y633.0043	Y633.SBM10X055	M10	7,2	8	4,5	9	3,6	20	055	24
Y633.0043	Y633.SBM10X060	M10	7,2	8	4,5	9	3,6	20	060	27
Y633.0043	Y633.SBM10X065	M10	7,2	8	4,5	9	3,6	20	065	28
Y633.0043	Y633.SBM10X080	M10	7,2	8	4,5	9	3,6	20	080	30
Y633.0049	Y633.SBM12X065	M12	7,2	8	4,5	10	4,5	25	065	41
Y633.0049	Y633.SBM12X070	M12	7,2	8	4,5	10	4,5	25	070	44,6
Y633.0049	Y633.SBM12X100	M12	7,2	8	4,5	10	4,5	25	100	65
Y633.0054	Y633.SBM16X070	M16	11	12	5	12	5,3	32	070	82
Y633.0054	Y633.SBM16X080	M16	11	12	5	12	5,3	32	080	99
Y633.0054	Y633.SBM16X100	M16	11	12	5	12	5,3	32	100	122
Y633.0054	Y633.SBM16X125	M16	11	12	5	12	5,3	32	125	154
Y633.0059	Y633.SBM20X090	M20	14,4	15,5	5,5	14	5,6	40	090	170
Y633.0059	Y633.SBM20X100	M20	14,4	15,5	5,5	14	5,6	40	100	188
Y633.0059	Y633.SBM20X125	M20	14,4	15,5	5,5	14	5,6	40	125	239

Code	art.	d1 6g	d2	d3	h	h1	h2	for thrust pads DIN 6311	Q	Weight (g)
Y633.0059	Y633.SBM20X150	M20	14,4	15,5	5,5	14	5,6	40	150	292

Version Y633 CIN - stainless steel (Aisi 303)

Code	art.	d1 6g	d2	d3	h	h1	h2	for thrust pads DIN 6311	Q	Weight (g)
Y633.0004	Y633.INM06X035CIN	M6	4	4,5	2,5	6	2,2	12	035	5,5
Y633.0004	Y633.INM06X040CIN	M6	4	4,5	2,5	6	2,2	12	040	6
Y633.0004	Y633.INM06X050CIN	M6	4	4,5	2,5	6	2,2	12	050	8
Y633.0009	Y633.INM08X040CIN	M8	5,4	6	3	7,5	3	16	040	11
Y633.0009	Y633.INM08X045CIN	M8	5,4	6	3	7,5	3	16	045	13
Y633.0009	Y633.INM08X050CIN	M8	5,4	6	3	7,5	3	16	050	14
Y633.0009	Y633.INM08X060CIN	M8	5,4	6	3	7,5	3	16	060	17,5
Y633.0014	Y633.INM10X055CIN	M10	7,2	8	4,5	9	3,6	20	055	24
Y633.0014	Y633.INM10X060CIN	M10	7,2	8	4,5	9	3,6	20	060	27
Y633.0014	Y633.INM10X065CIN	M10	7,2	8	4,5	9	3,6	20	065	28
Y633.0014	Y633.INM10X080CIN	M10	7,2	8	4,5	9	3,6	20	080	30
Y633.0019	Y633.INM12X065CIN	M12	7,2	8	4,5	10	4,5	25	065	41
Y633.0019	Y633.INM12X070CIN	M12	7,2	8	4,5	10	4,5	25	070	44,6
Y633.0019	Y633.INM12X080CIN	M12	7,2	8	4,5	10	4,5	25	080	52
Y633.0019	Y633.INM12X100CIN	M12	7,2	8	4,5	10	4,5	25	100	65
Y633.0023	Y633.INM16X070CIN	M16	11	12	5	12	5,3	32	070	82
Y633.0023	Y633.INM16X080CIN	M16	11	12	5	12	5,3	32	080	99
Y633.0023	Y633.INM16X100CIN	M16	11	12	5	12	5,3	32	100	122
Y633.0023	Y633.INM16X125CIN	M16	11	12	5	12	5,3	32	125	154
Y633.0028	Y633.INM20X090CIN	M20	14,4	15,5	5,5	14	5,6	40	090	170
Y633.0028	Y633.INM20X100CIN	M20	14,4	15,5	5,5	14	5,6	40	100	188
Y633.0028	Y633.INM20X125CIN	M20	14,4	15,5	5,5	14	5,6	40	125	239
Y633.0028	Y633.INM20X150CIN	M20	14,4	15,5	5,5	14	5,6	40	150	292

Y705

UPDATE | +200° -40° | C40 | Aisi 303 | RoHS COMPLIANT

23

DIN 705 - STEEL LOCK RING NUT WITH STEEL GRUB SCREW DIN 553

Anelli di serraggio

Materials:
Y705:
Standard steel.
Y705PIN:
Stainless steel (Aisi 303).

Surface finish:
Smooth, turned.

Colour:
Y705:
Black-oxide treatment.
Y705PIN:
Natural.

Grub screw:
Slotted grub screw DIN 553.
Attention:
second grub screw added starting from diameter D=>70 mm.

Special requests:
None.

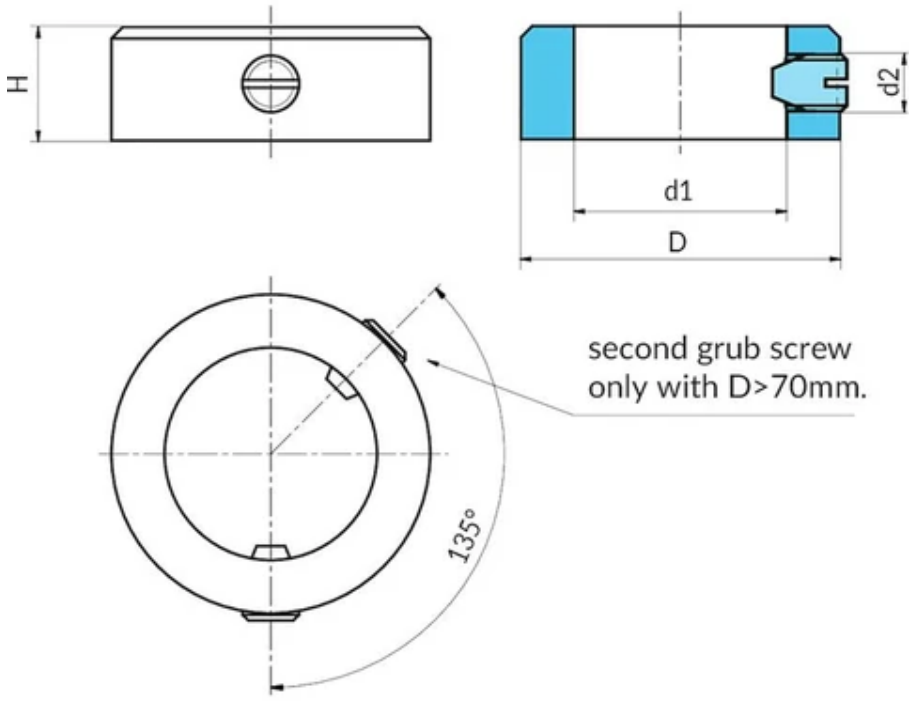

Version Y705: black-oxide treated steel

Code	Art.	D h13	H js14	d2	d1 H8	Weight (g)
Y705007.0002	Y705007.VBD003	7	5	M2	3	1,2
Y705008.0002	Y705008.VBD004	8	5	M2.5	4	1,4
Y705010.0002	Y705010.VBD005	10	6	M3	5	2,7
Y705012.0003	Y705012.VBD006	12	8	M4	6	5
Y705012.0004	Y705012.VBD007	12	8	M4	7	5
Y705016.0002	Y705016.VBD008	16	8	M4	8	9
Y705018.0002	Y705018.VBD009	18	10	M5	9	14,5
Y705020.0003	Y705020.VBD010	20	10	M5	10	18
Y705020.0004	Y705020.VBD011	20	10	M5	11	16,5
Y705022.0002	Y705022.VBD012	22	12	M6	12	24
Y705025.0003	Y705025.VBD014	25	12	M6	14	30,5
Y705025.0004	Y705025.VBD015	25	12	M6	15	28
Y705028.0002	Y705028.VBD016	28	12	M6	16	37
Y705032.0003	Y705032.VBD018	32	14	M6	18	58
Y705032.0004	Y705032.VBD020	32	14	M6	20	52
Y705040.0004	Y705040.VBD024	40	16	M8	24	98
Y705040.0005	Y705040.VBD025	40	16	M8	25	94
Y705040.0006	Y705040.VBD026	40	16	M8	26	86,5
Y705045.0003	Y705045.VBD028	45	16	M8	28	120
Y705045.0004	Y705045.VBD030	45	16	M8	30	107
Y705050.0002	Y705050.VBD032	50	16	M8	32	142

Code	Art.	D h13	H js14	d2	d1 H8	Weight (g)
Y706056.0004	Y706056.VBD035	56	16	M8	35	184
Y705056.0005	Y705056.VBD036	56	16	M8	36	177
Y705056.0006	Y705056.VBD038	56	16	M8	38	163
Y705063.0003	Y705063.VBD040	63	18	M10	40	256
Y705063.0004	Y705063.VBD042	63	18	M10	42	240
Y705070.0003	Y705070.VBD045	70	18	M10	45	313
Y705070.0004	Y705070.VBD048	70	18	M10	48	313
Y705080.0005	Y705080.VBD050	80	18	M10	50	424
Y705080.0006	Y705080.VBD052	80	18	M10	52	401
Y705080.0007	Y705080.VBD055	80	18	M10	55	367
Y705080.0008	Y705080.VBD056	80	18	M10	56	362
Y705090.0004	Y705090.VBD058	90	20	M10	58	572
Y705090.0005	Y705090.VBD060	90	20	M10	60	555
Y705090.0006	Y705090.VBD063	90	20	M10	63	498
Y705100.0004	Y705100.VBD065	100	20	M10	65	702
Y705100.0005	Y705100.VBD068	100	20	M10	68	702
Y705100.0006	Y705100.VBD070	100	20	M10	70	615
Y705110.0004	Y705110.VBD072	110	22	M12	72	938
Y705110.0005	Y705110.VBD075	110	22	M12	75	878
Y705110.0006	Y705110.VBD080	110	22	M12	80	773
Y705125.0003	Y705125.VBD085	125	22	M12	85	1139
Y705125.0004	Y705125.VBD090	125	22	M12	90	1021
Y705140.0002	Y705140.VBD100	140	25	M12	100	1480

Version Y705 PIN - stainless steel (Aisi 303)

Code	Art.	D h13	H js14	d2	d1 H8	Weight (g)
Y705007.0001	Y705007.IND003PIN	7	5	M2	3	1,2
Y705008.0001	Y705008.IND004PIN	8	5	M2,5	4	1,4
Y705010.0001	Y705010.IND005PIN	10	6	M3	5	2,7
Y705012.0001	Y705012.IND006PIN	12	8	M4	6	5
Y705012.0002	Y705012.IND007PIN	12	8	M4	7	5
Y705016.0001	Y705016.IND008PIN	16	8	M4	8	9
Y705018.0001	Y705018.IND009PIN	18	10	M5	9	14,5
Y705020.0001	Y705020.IND010PIN	20	10	M5	10	18
Y705020.0002	Y705020.IND011PIN	20	10	M5	11	16,5
Y705022.0001	Y705022.IND012PIN	22	12	M6	12	24
Y705025.0001	Y705025.IND014PIN	25	12	M6	14	30,5
Y705025.0002	Y705025.IND015PIN	25	12	M6	15	28
Y705028.0001	Y705028.IND016PIN	28	12	M6	16	37
Y705032.0001	Y705032.IND018PIN	32	14	M6	18	58

Code	Art.	D h13	H js14	d2	d1 H8	Weight (g)
Y705032.0002	Y705032.IND020PIN	32	14	M6	20	52
Y705040.0001	Y705040.IND024PIN	40	16	M8	24	98
Y705040.0002	Y705040.IND025PIN	40	16	M8	25	94
Y705040.0003	Y705040.IND026PIN	40	16	M8	26	86,5
Y705045.0001	Y705045.IND028PIN	45	16	M8	28	120
Y705045.0002	Y705045.IND030PIN	45	16	M8	30	107
Y705050.0001	Y705050.IND032PIN	50	16	M8	32	142
Y705056.0001	Y705056.IND035PIN	56	16	M8	35	184
Y705056.0002	Y705056.IND036PIN	56	16	M8	36	177
Y705056.0003	Y705056.IND038PIN	56	16	M8	38	163
Y705063.0001	Y705063.IND040PIN	63	18	M10	40	256
Y705063.0002	Y705063.IND042PIN	63	18	M10	42	240
Y705070.0001	Y705070.IND045PIN	70	18	M10	45	313
Y705070.0002	Y705070.IND048PIN	70	18	M10	48	313
Y705080.0001	Y705080.IND050PIN	80	18	M10	50	424
Y705080.0002	Y705080.IND052PIN	80	18	M10	52	401
Y705080.0003	Y705080.IND055PIN	80	18	M10	55	367
Y705080.0004	Y705080.IND056PIN	80	18	M10	56	362
Y705090.0001	Y705090.IND058PIN	90	20	M10	58	572
Y705090.0002	Y705090.IND060PIN	90	20	M10	60	555
Y705090.0003	Y705090.IND063PIN	90	20	M10	63	498
Y705100.0001	Y705100.IND065PIN	100	20	M10	65	702
Y705100.0002	Y705100.IND068PIN	100	20	M10	68	702
Y705100.0003	Y705100.IND070PIN	100	20	M10	70	615
Y705110.0001	Y705110.IND072PIN	110	22	M12	72	938
Y705110.0002	Y705110.IND075PIN	110	22	M12	75	878
Y705110.0003	Y705110.IND080PIN	110	22	M12	80	773
Y705125.0001	Y705125.IND085PIN	125	22	M12	85	1139
Y705125.0002	Y705125.IND090PIN	125	22	M12	90	1021
Y705140.0001	Y705140.IND100PIN	140	25	M12	100	1480

Y706

UPDATE | +200° -40° | C40 | Aisi 303 | RoHS COMPLIANT

23

DIN 705 - STEEL LOCK RING NUT WITH STEEL GRUB SCREW DIN 914

Anelli di serraggio

Materials:
Y706:
Standard steel.
Y706PIN:
Stainless steel (Aisi 303).

Surface finish:
Smooth, turned.

Colour:
Y706:
Black-oxide treatment.
Y706PIN:
Natural.

Grub screw:
Hex socket head grub screw DIN 914.
Attention:
second grub screw added starting from diameter D=>70 mm.

Special requests:
None.

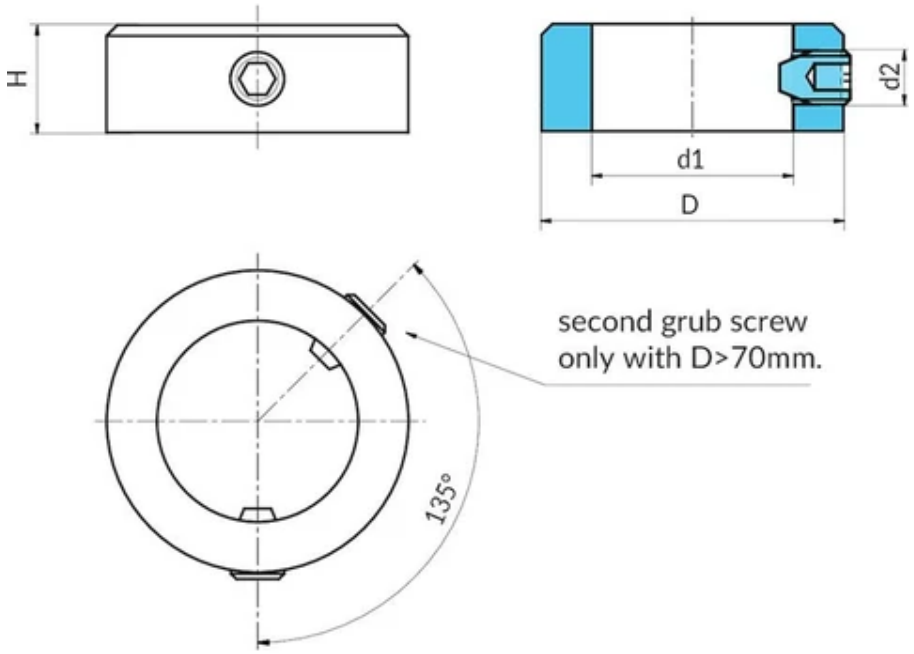

Version Y706: black-oxide treated steel

Code	Art.	D h13	H js14	d2	d1 H8	Weight (g)
Y706007.0002	Y706007.VBD003	7	5	M2	3	1,2
Y706008.0002	Y706008.VBD004	8	5	M2,5	4	1,4
Y706010.0002	Y706010.VBD005	10	6	M3	5	2,7
Y706012.0003	Y706012.VBD006	12	8	M4	6	5
Y706012.0004	Y706012.VBD007	12	8	M4	7	5
Y706016.0002	Y706016.VBD008	16	8	M4	8	9
Y706018.0002	Y706018.VBD009	18	10	M5	9	14,5
Y706020.0003	Y706020.VBD010	20	10	M5	10	18
Y706020.0005	Y706020.VBD011	20	10	M5	11	16,5
Y706022.0002	Y706022.VBD012	22	12	M6	12	24
Y706025.0003	Y706025.VBD014	25	12	M6	14	30,5
Y706025.0004	Y706025.VBD015	25	12	M6	15	28
Y706028.0002	Y706028.VBD016	28	12	M6	16	37
Y706032.0003	Y706032.VBD018	32	14	M6	18	58
Y706032.0004	Y706032.VBD020	32	14	M6	20	52
Y706040.0004	Y706040.VBD024	40	16	M8	24	98
Y706040.0005	Y706040.VBD025	40	16	M8	25	94
Y706040.0007	Y706040.VBD026	40	16	M8	26	86,5
Y706045.0003	Y706045.VBD028	45	16	M8	28	120
Y706045.0004	Y706045.VBD030	45	16	M8	30	107
Y706050.0002	Y706050.VBD032	50	16	M8	32	142

Code	Art.	D h13	H js14	d2	d1 H8	Weight (g)
Y706056.0004	Y706056.VBD035	56	16	M8	35	184
Y706056.0005	Y706056.VBD036	56	16	M8	36	177
Y706056.0006	Y706056.VBD038	56	16	M8	38	163
Y706063.0003	Y706063.VBD040	63	18	M10	40	256
Y706063.0004	Y706063.VBD042	63	18	M10	42	240
Y706070.0003	Y706070.VBD045	70	18	M10	45	313
Y706070.0004	Y706070.VBD048	70	18	M10	48	313
Y706080.0005	Y706080.VBD050	80	18	M10	50	424
Y706080.0006	Y706080.VBD052	80	18	M10	52	401
Y706080.0007	Y706080.VBD055	80	18	M10	55	367
Y706080.0008	Y706080.VBD056	80	18	M10	56	362
Y706090.0004	Y706090.VBD058	90	20	M10	58	572
Y706090.0005	Y706090.VBD060	90	20	M10	60	555
Y706090.0006	Y706090.VBD063	90	20	M10	63	498
Y706100.0004	Y706100.VBD065	100	20	M10	65	702
Y706100.0005	Y706100.VBD068	100	20	M10	68	702
Y706100.0006	Y706100.VBD070	100	20	M10	70	615
Y706110.0004	Y706110.VBD072	110	22	M12	72	938
Y706110.0005	Y706110.VBD075	110	22	M12	75	878
Y706110.0006	Y706110.VBD080	110	22	M12	80	773
Y706125.0003	Y706125.VBD085	125	22	M12	85	1139
Y706125.0004	Y706125.VBD090	125	22	M12	90	1021
Y706140.0002	Y706140.VBD100	140	25	M12	100	1480

Version Y706 PIN - stainless steel (Aisi 303)

Code	Art.	D h13	H js14	d2	d1 H8	Weight (g)
Y706007.0001	Y706007.IND003PIN	7	5	M2	3	1,2
Y706008.0001	Y706008.IND004PIN	8	5	M2,5	4	1,4
Y706010.0001	Y706010.IND005PIN	10	6	M3	5	2,7
Y706012.0002	Y706012.IND007PIN	12	8	M4	7	5
Y706016.0001	Y706016.IND008PIN	16	8	M4	8	9
Y706018.0001	Y706018.IND009PIN	18	10	M5	9	14,5
Y706020.0001	Y706020.IND010PIN	20	10	M5	10	18
Y706020.0002	Y706020.IND011PIN	20	10	M5	11	16,5
Y706022.0001	Y706022.IND012PIN	22	12	M6	12	24
Y706025.0001	Y706025.IND014PIN	25	12	M6	14	30,5
Y706025.0002	Y706025.IND015PIN	25	12	M6	15	28
Y706028.0001	Y706028.IND016PIN	28	12	M6	16	37
Y706032.0001	Y706032.IND018PIN	32	14	M6	18	58
Y705032.0002	Y705032.IND020PIN	32	14	M6	20	52

Code	Art.	D h13	H js14	d2	d1 H8	Weight (g)
Y706040.0001	Y706040.IND024PIN	40	16	M8	24	98
Y706040.0002	Y706040.IND025PIN	40	16	M8	25	94
Y706040.0003	Y706040.IND026PIN	40	16	M8	26	86,5
Y706045.0001	Y706045.IND028PIN	45	16	M8	28	120
Y706045.0002	Y706045.IND030PIN	45	16	M8	30	107
Y706050.0001	Y706050.IND032PIN	50	16	M8	32	142
Y706056.0001	Y706056.IND035PIN	56	16	M8	35	184
Y706056.0002	Y706056.IND036PIN	56	16	M8	36	177
Y706056.0003	Y706056.IND038PIN	56	16	M8	38	163
Y706063.0001	Y706063.IND040PIN	63	18	M10	40	256
Y706063.0002	Y706063.IND042PIN	63	18	M10	42	240
Y706070.0001	Y706070.IND045PIN	70	18	M10	45	313
Y706070.0002	Y706070.IND048PIN	70	18	M10	48	313
Y706080.0001	Y706080.IND050PIN	80	18	M10	50	424
Y706080.0002	Y706080.IND052PIN	80	18	M10	52	401
Y706080.0003	Y706080.IND055PIN	80	18	M10	55	367
Y706080.0004	Y706080.IND056PIN	80	18	M10	56	362
Y706090.0001	Y706090.IND058PIN	90	20	M10	58	572
Y706090.0002	Y706090.IND060PIN	90	20	M10	60	555
Y706090.0003	Y706090.IND063PIN	90	20	M10	63	498
Y706100.0001	Y706100.IND065PIN	100	20	M10	65	702
Y706100.0002	Y706100.IND068PIN	100	20	M10	68	702
Y706100.0003	Y706100.IND070PIN	100	20	M10	70	615
Y706110.0001	Y706110.IND072PIN	110	22	M12	72	938
Y706110.0002	Y706110.IND075PIN	110	22	M12	75	878
Y706110.0003	Y706110.IND080PIN	110	22	M12	80	773
Y706125.0001	Y706125.IND085PIN	125	22	M12	85	1139
Y706125.0002	Y706125.IND090PIN	125	22	M12	90	1021
Y706140.0001	Y706140.IND100PIN	140	25	M12	100	1480

Y708

+200° -40° | AVP | Aisi 303 | Al | RoHS COMPLIANT

23

TWO-PIECE SHAFT COLLAR

Anelli di serraggio

Materials (1):

Y708:

Turned free-cutting steel.

Y708PIN:

Turned stainless steel (Aisi 303).

Y708AND:

Turned aluminium (Al 6060).

Surface finish:

Fine turned.

Colour:

Y708:

Standard black-oxide treatment.

Y708PIN:

Natural.

Y708AND:

Natural.

Fixing screws (2):

Y709:

No. 1 black-oxide treated steel socket head screw, class 12.9 DIN 912

Y709PIN - Y710AND :

No. 1 stainless steel socket head screw (Aisi 304) DIN 912.

ATTENTION:

We recommend making the shaft with a tolerance less than h11.

Special requests:

None.

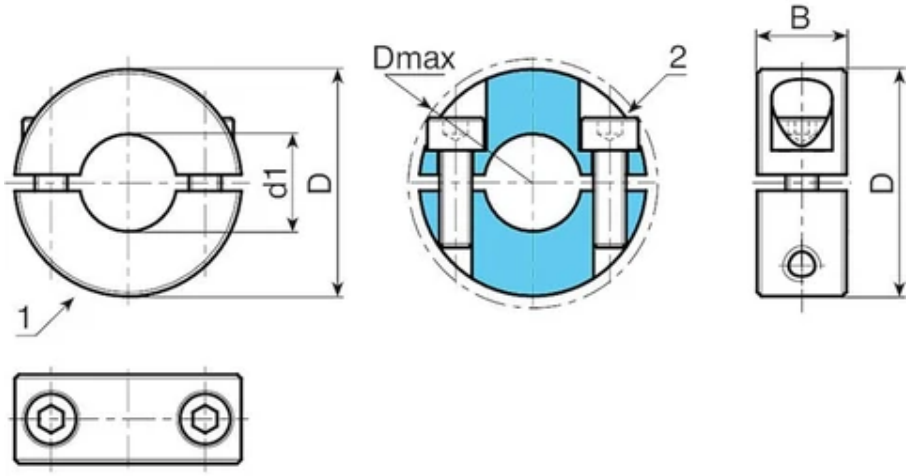

Version Y708: Black-oxide treated steel shaft collars

Code	Art.	D	Dmax	B	d1	DIN 912	Weight (g)
Y708016.0007	Y708016.VBD04	16	20.7	9	4	M03x8	12.5
Y708016.0008	Y708016.VBD05	16	20.7	9	5	M03x8	12.7
Y708016.0009	Y708016.VBD06	16	20.7	9	6	M03x8	10.3
Y708018.0003	Y708018.VBD08	18	22.4	9	8	M03x8	14
Y708024.0003	Y708024.VBD10	24	26	9	10	M03x10	22
Y708028.0003	Y708028.VBD12	28	31.8	11	12	M04x12	37
Y708034.0005	Y708034.VBD15	34	39.4	13	15	M05x16	61.5
Y708034.0006	Y708034.VBD16	34	39.4	13	16	M05x16	62
Y708036.0003	Y708036.VBD18	36	41.1	13	18	M05x16	66
Y708040.0003	Y708040.VBD20	40	46.4	15	20	M06x18	99
Y708042.0003	Y708042.VBD22	42	48.1	15	22	M06x18	105
Y708045.0003	Y708045.VBD25	45	50.8	15	25	M06x18	116
Y708048.0003	Y708048.VBD28	48	53.7	15	28	M06x18	123
Y708054.0003	Y708054.VBD30	54	58.6	15	30	M06x18	166
Y708060.0003	Y708060.VBD40	60	65	15	40	M06x18	166
Y708078.0003	Y708078.VBD50	78	87	19	50	M08x25	390

Version Y708PIN: Stainless steel (Aisi 303) shaft collars

Code	Art.	D	Dmax	B	d1	DIN 912	Weight (g)
Y708016.0004	Y708016.IND04PIN	16	20.7	9	4	M03x8	12

Code	Art.	D	Dmax	B	d1	DIN 912	Weight (g)
Y708016.0005	Y708016.IND05PIN	16	20.7	9	5	M03x8	11.5
Y708016.0006	Y708016.IND06PIN	16	20.7	9	6	M03x8	9.5
Y708018.0002	Y708018.IND08PIN	18	22.4	9	8	M03x8	12
Y708024.0002	Y708024.IND10PIN	24	26	9	10	M03x10	22
Y708028.0002	Y708028.IND12PIN	28	31.8	11	12	M04x12	37
Y708034.0003	Y708034.IND15PIN	34	39.4	13	15	M05x16	65
Y708034.0004	Y708034.IND16PIN	34	39.4	13	16	M05x16	63.5
Y708036.0002	Y708036.IND18PIN	36	41.1	13	18	M05x16	69.5
Y708040.0002	Y708040.IND20PIN	40	46.4	15	20	M06x18	99
Y708042.0002	Y708042.IND22PIN	42	48.1	15	22	M06x18	107
Y708045.0002	Y708045.IND25PIN	45	50.8	15	25	M06x18	115
Y708048.0002	Y708048.IND28PIN	48	53.7	15	28	M06x18	127
Y708054.0002	Y708054.IND30PIN	54	58.6	15	30	M06x18	169
Y708060.0002	Y708060.IND40PIN	60	65	15	40	M06x18	166
Y708078.0002	Y708078.IND50PIN	78	87	19	50	M08x25	392

Version Y708AND: Natural aluminium shaft collars

Code	Art.	D	Dmax	B	d1	DIN 912	Weight (g)
Y708016.0001	Y708016.AND04	16	20.7	9	4	M03x8	5.5
Y708016.0002	Y708016.AND05	16	20.7	9	5	M03x8	5.3
Y708016.0003	Y708016.AND06	16	20.7	9	6	M03x8	5
Y708018.0001	Y708018.AND08	18	22.4	9	8	M03x8	5.5
Y708024.0001	Y708024.AND10	24	26	9	10	M03x10	9.3
Y708028.0001	Y708028.AND12	28	31.8	11	12	M04x12	15.5
Y708034.0001	Y708034.AND15	34	39.4	13	15	M05x16	28
Y708034.0002	Y708034.AND16	34	39.4	13	16	M05x16	28
Y708036.0001	Y708036.AND18	36	41.1	13	18	M05x16	30
Y708040.0001	Y708040.AND20	40	46.4	15	20	M06x18	43
Y708042.0001	Y708042.AND22	42	48.1	15	22	M06x18	45
Y708045.0001	Y708045.AND25	45	50.8	15	25	M06x18	47
Y708048.0001	Y708048.AND28	48	53.7	15	28	M06x18	51.5
Y708054.0001	Y708054.AND30	54	58.6	15	30	M06x18	67
Y708060.0001	Y708060.AND40	60	65	15	40	M06x18	66
Y708078.0001	Y708078.AND50	78	87	19	50	M08x25	156

Y709

+200° -40° | AVP | Aisi 303 | Al | RoHS COMPLIANT

23

SINGLE SPLIT SHAFT COLLAR - A DESIGN

Anelli di serraggio

Materials (1):

Y709:

Turned free-cutting steel.

Y709PIN:

Turned stainless steel (Aisi 303).

Y709AND:

Turned aluminium (Al 6060).

Surface finish:

Fine turned.

Colour:

Y709:

Standard black-oxide treatment.

Y709PIN:

Natural.

Y709AND:

Natural.

Fixing screws (2):

Y709:

No. 1 black-oxide treated steel socket head screw, class 12.9 DIN 912

Y709PIN - Y709AND:

No. 1 stainless steel socket head screw (Aisi 304) DIN 912.

ATTENTION:

We recommend making the shaft with a tolerance less than h11.

Special requests:

None.

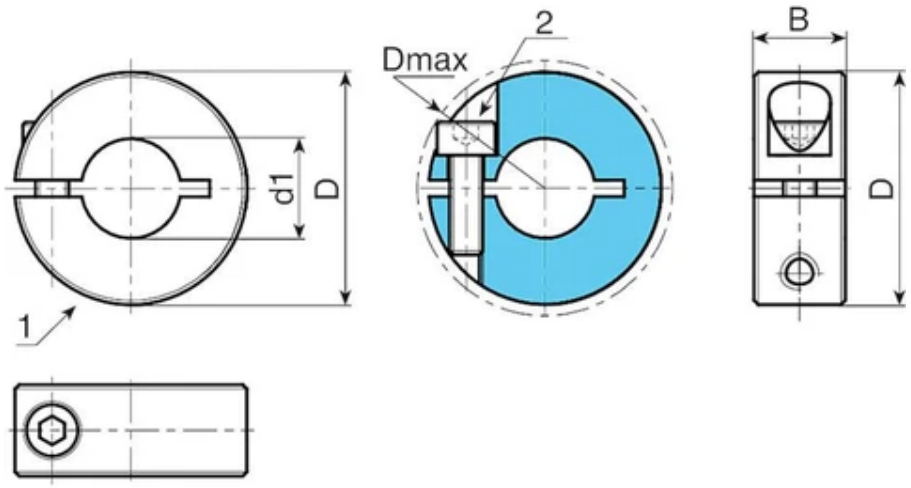

Version Y709: Black-oxide treated steel shaft collars

Code	Art.	D	Dmax	B	d1	DIN 912	Weight (g)
Y709016.0007	Y709016.VBD04	16	20.7	9	4	M03x8	13.5
Y709016.0008	Y709016.VBD05	16	20.7	9	5	M03x8	11.5
Y709016.0009	Y709016.VBD06	16	20.7	9	6	M03x8	10.8
Y709018.0003	Y709018.VBD08	18	22.4	9	8	M03x8	12.8
Y709024.0003	Y709024.VBD10	24	26	9	10	M03x10	23
Y709028.0003	Y709028.VBD12	28	31.8	11	12	M04x12	39
Y709034.0005	Y709034.VBD15	34	39.4	13	15	M05x16	69
Y709034.0006	Y709034.VBD16	34	39.4	13	16	M05x16	65
Y709036.0003	Y709036.VBD18	36	41.1	13	18	M05x16	70.5
Y709040.0003	Y709040.VBD20	40	46.4	15	20	M06x18	103
Y709042.0003	Y709042.VBD22	42	48.1	15	22	M06x18	102
Y709045.0003	Y709045.VBD25	45	50.8	15	25	M06x18	121
Y709048.0003	Y709048.VBD28	48	53.7	15	28	M06x18	132
Y709054.0003	Y709054.VBD30	54	58.6	15	30	M06x18	174
Y709060.0003	Y709060.VBD40	60	65	15	40	M06x18	171
Y709078.0003	Y709078.VBD50	78	87	19	50	M08x25	400

Version Y709 PIN: Stainless steel (Aisi 303) shaft collars

Code	Art.	D	Dmax	B	d1	DIN 912	Weight (g)
Y709016.0004	Y709016.IND04PIN	16	20.7	9	4	M03x8	13.5

Code	Art.	D	Dmax	B	d1	DIN 912	Weight (g)
Y709016.0005	Y709016.IND05PIN	16	20.7	9	5	M03x8	11.5
Y709016.0006	Y709016.IND06PIN	16	20.7	9	6	M03x8	10.8
Y709018.0002	Y709018.IND08PIN	18	22.4	9	8	M03x8	12.8
Y709024.0002	Y709024.IND10PIN	24	26	9	10	M03x10	23
Y709028.0002	Y709028.IND12PIN	28	31.8	11	12	M04x12	39
Y709034.0003	Y709034.IND15PIN	34	39.4	13	15	M05x16	69
Y709034.0004	Y709034.IND16PIN	34	39.4	13	16	M05x16	65
Y709036.0002	Y709036.IND18PIN	36	41.1	13	18	M05x16	70.5
Y709040.0002	Y709040.IND20PIN	40	46.4	15	20	M06x18	103
Y709042.0002	Y709042.IND22PIN	42	48.1	15	22	M06x18	102
Y709045.0002	Y709045.IND25PIN	45	50.8	15	25	M06x18	121
Y709048.0002	Y709048.IND28PIN	48	53.7	15	28	M06x18	132
Y709054.0002	Y709054.IND30PIN	54	58.6	15	30	M06x18	174
Y709060.0002	Y709060.IND40PIN	60	65	15	40	M06x18	171
Y709078.0002	Y709078.IND50PIN	78	87	19	50	M08x25	400

Version Y709AN: Natural aluminium shaft collars

Code	Art.	D	Dmax	B	d1	DIN 912	Weight (g)
Y709016.0001	Y709016.AND04	16	20.7	9	4	M03x8	5.2
Y709016.0002	Y709016.AND05	16	20.7	9	5	M03x8	5
Y709016.0003	Y709016.AND06	16	20.7	9	6	M03x8	4.6
Y709018.0001	Y709018.AND08	18	22.4	9	8	M03x8	5.3
Y709024.0001	Y709024.AND10	24	26	9	10	M03x10	9.2
Y709028.0001	Y709028.AND12	28	31.8	11	12	M04x12	15
Y709034.0001	Y709034.AND15	34	39.4	13	15	M05x16	27
Y709034.0002	Y709034.AND16	34	39.4	13	16	M05x16	26.5
Y709036.0001	Y709036.AND18	36	41.1	13	18	M05x16	28.5
Y709040.0001	Y709040.AND20	40	46.4	15	20	M06x18	41
Y709042.0001	Y709042.AND22	42	48.1	15	22	M06x18	42.5
Y709045.0001	Y709045.AND25	45	50.8	15	25	M06x18	45.5
Y709048.0001	Y709048.AND28	48	53.7	15	28	M06x18	50
Y709054.0001	Y709054.AND30	54	58.6	15	30	M06x18	66
Y709060.0001	Y709060.AND40	60	65	15	40	M06x18	65
Y709078.0001	Y709078.AND50	78	87	19	50	M08x25	150

Y710

+200° -40° | AVP | Aisi 303 | Al | RoHS COMPLIANT

23

SINGLE SPLIT SHAFT COLLAR - SHAPE B - (MORE CLAMPING FORCE +15%)

Anelli di serraggio

Materials (1):

Y710:

Turned free-cutting steel.

Y710PIN:

Turned stainless steel (Aisi 303).

Y710AND:

Turned aluminium (Al 6060).

Surface finish:

Fine turned.

Colour:

Y710:

Standard black-oxide treatment.

Y710PIN:

Natural.

Y710AND:

Natural.

Fixing screws (2):

Y710:

No. 1 black-oxide treated steel socket head screw, class 12.9 DIN 912

Y710PIN - Y710AND :

No. 1 stainless steel socket head screw (Aisi 304) DIN 912.

ATTENTION:

We recommend making the shaft with a tolerance less than h11.

Special requests:

None.

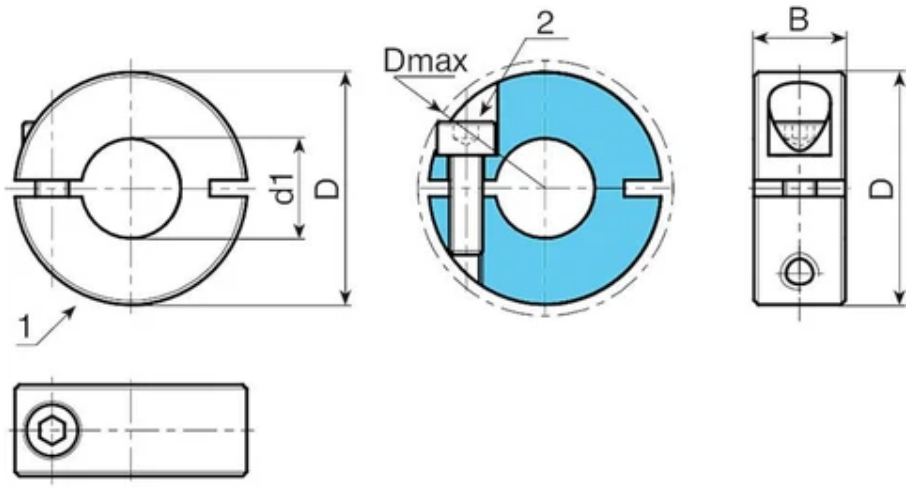

Version Y710: Black-oxide treated steel shaft collars

Code	Art.	D	Dmax	B	d1	DIN 912	Weight (g)
Y710016.0007	Y710016.VBD04	16	20.7	9	4	M03x8	11.8
Y710016.0008	Y710016.VBD05	16	20.7	9	5	M03x8	11.4
Y710016.0009	Y710016.VBD06	16	20.7	9	6	M03x8	10.5
Y710018.0003	Y710018.VBD08	18	22.4	9	8	M03x8	13
Y710024.0003	Y710024.VBD10	24	26	9	10	M03x10	23
Y710028.0003	Y710028.VBD12	28	31.8	11	12	M04x12	39
Y710034.0005	Y710034.VBD15	34	39.4	13	15	M05x16	68.5
Y710034.0006	Y710034.VBD16	34	39.4	13	16	M05x16	64.5
Y710036.0003	Y710036.VBD18	36	41.1	13	18	M05x16	70
Y710040.0003	Y710040.VBD20	40	46.4	15	20	M06x18	103
Y710042.0003	Y710042.VBD22	42	48.1	15	22	M06x18	103
Y710045.0003	Y710045.VBD25	45	50.8	15	25	M06x18	118
Y710048.0003	Y710048.VBD28	48	53.7	15	28	M06x18	129
Y710054.0003	Y710054.VBD30	54	58.6	15	30	M06x18	175
Y710060.0003	Y710060.VBD40	60	65	15	40	M06x18	171
Y710078.0003	Y710078.VBD50	78	87	19	50	M08x25	400

Version Y710 PIN: Stainless steel (Aisi 303) shaft collars

Code	Art.	D	Dmax	B	d1	DIN 912	Weight (g)
Y710016.0004	Y710016.IND04PIN	16	20.7	9	4	M03x8	11.8

Code	Art.	D	Dmax	B	d1	DIN 912	Weight (g)
Y710016.0005	Y710016.IND05PIN	16	20.7	9	5	M03x8	11.4
Y710016.0006	Y710016.IND06PIN	16	20.7	9	6	M03x8	10.5
Y710018.0002	Y710018.IND08PIN	18	22.4	9	8	M03x8	13
Y710024.0002	Y710024.IND10PIN	24	26	9	10	M03x10	23
Y710028.0002	Y710028.IND12PIN	28	31.8	11	12	M04x12	39
Y710034.0003	Y710034.IND15PIN	34	39.4	13	15	M05x16	68.5
Y710034.0004	Y710034.IND16PIN	34	39.4	13	16	M05x16	64.5
Y710036.0002	Y710036.IND18PIN	36	41.1	13	18	M05x16	70
Y710040.0002	Y710040.IND20PIN	40	46.4	15	20	M06x18	103
Y710042.0002	Y710042.IND22PIN	42	48.1	15	22	M06x18	109
Y710045.0002	Y710045.IND25PIN	45	50.8	15	25	M06x18	118
Y710048.0002	Y710048.IND28PIN	48	53.7	15	28	M06x18	129
Y710054.0002	Y710054.IND30PIN	54	58.6	15	30	M06x18	175
Y710060.0002	Y710060.IND40PIN	60	65	15	40	M06x18	171
Y710078.0002	Y710078.IND50PIN	78	87	19	50	M08x25	400

Version Y710AN: Natural aluminium shaft collars

Code	Art.	D	Dmax	B	d1	DIN 912	Weight (g)
Y710016.0001	Y710016.AND04	16	20.7	9	4	M03x8	5.1
Y710016.0002	Y710016.AND05	16	20.7	9	5	M03x8	5
Y710016.0003	Y710016.AND06	16	20.7	9	6	M03x8	4.6
Y710018.0001	Y710018.AND08	18	22.4	9	8	M03x8	5.3
Y710024.0001	Y710024.AND10	24	26	9	10	M03x10	9.2
Y710028.0001	Y710028.AND12	28	31.8	11	12	M04x12	15
Y710034.0001	Y710034.AND15	34	39.4	13	15	M05x16	27
Y710034.0002	Y710034.AND16	34	39.4	13	16	M05x16	26.5
Y710036.0001	Y710036.AND18	36	41.1	13	18	M05x16	28.5
Y710040.0001	Y710040.AND20	40	46.4	15	20	M06x18	41
Y710042.0001	Y710042.AND22	42	48.1	15	22	M06x18	42.5
Y710045.0001	Y710045.AND25	45	50.8	15	25	M06x18	45.5
Y710048.0001	Y710048.AND28	48	53.7	15	28	M06x18	51
Y710054.0001	Y710054.AND30	54	58.6	15	30	M06x18	66
Y710060.0001	Y710060.AND40	60	65	15	40	M06x18	67
Y710078.0001	Y710078.AND50	78	87	19	50	M08x25	152

Y711

+200° -40° | AVP | Aisi 303 | RoHS COMPLIANT

23

THREADED SHAFT COLLAR

Anelli di serraggio

Materials (1):

Y711:

Turned free-cutting steel.

Y711PIN:

Turned stainless steel (Aisi 303).

Surface finish:

Fine turned.

Colour:

Y711:

Standard black-oxide treatment.

Y711PIN:

Natural.

Fixing screws (2):

Y711:

No. 1 black-oxide treated steel socket head screw, class 12.9 DIN 912

Y711PIN:

No. 1 stainless steel socket head screw (Aisi 304) DIN 912.

ATTENTION:

We recommend making the shaft with a tolerance less than h11.

Special requests:

None.

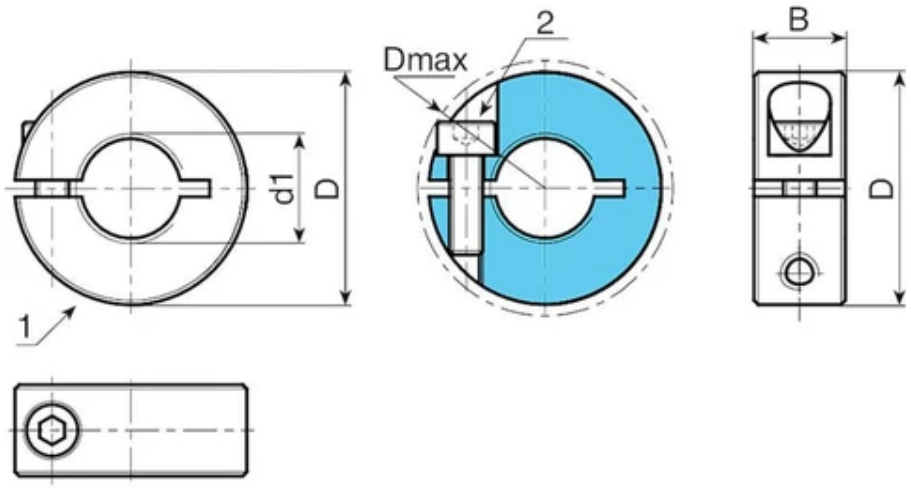

Version Y711: Black-oxide treated steel shaft collars

Code	Art.	D	Dmax	B	d1	DIN 912	Weight (g)
Y711016.0004	Y711016.VBM04	16	20,7	9	M4	M03x8	14
Y711016.0005	Y711016.VBM05	16	20,7	9	M5	M03x8	13,5
Y711016.0006	Y711016.VBM06	16	20,7	9	M6	M03x8	12
Y711018.0002	Y711018.VBM08	18	22,4	9	M8	M03x8	15
Y711024.0002	Y711024.VBM10	24	26	9	M10	M03x10	24.5
Y711028.0002	Y711028.VBM12	28	31,8	11	M12	M04x12	40
Y711034.0002	Y711034.VBM16	34	39,4	13	M16	M05x16	71
Y711040.0002	Y711040.VBM20	40	46,4	15	M20	M06x18	107

Version Y711 PIN: Stainless steel (Aisi 303) shaft collars

Code	Art.	D	Dmax	B	d1	DIN 912	Weight (g)
Y711016.0001	Y711016.INM04PIN	16	20,7	9	M4	M03x8	14
Y711016.0002	Y711016.INM05PIN	16	20,7	9	M5	M03x8	13,5
Y711016.0003	Y711016.INM06PIN	16	20,7	9	M6	M03x8	12
Y711018.0001	Y711018.INM08PIN	18	22,4	9	M8	M03x8	15
Y711024.0001	Y711024.INM10PIN	24	26	9	M10	M03x10	24.5
Y711028.0001	Y711028.INM12PIN	28	31,8	11	M12	M04x12	40
Y711034.0001	Y711034.INM16PIN	34	39,4	13	M16	M05x16	71
Y711040.0001	Y711040.INM20PIN	40	46,4	15	M20	M06x18	107

Y713

NEW | +135° -30° | PA6.6 | Aisi 316 | RoHS COMPLIANT

23

TWO-PIECE SHAFT COLLAR MADE OF TECHNOPOLYMER

Anelli di serraggio

Materials:

Technopolymer based on polyamide 66 reinforced with glass fiber and other components in minor percentages.

Resistant to oils and greases.

Surface finish:

Satin.

Colour:

Black (RAL 9011).

Inserts:

(1) 2 stainless steel socket head screws (Aisi 316), DIN 912.

(2) 2 stainless steel nuts (Aisi 316), DIN 934.

ATTENTION:

We recommend making the shaft with a tolerance less than h11.

Special requests:

None.

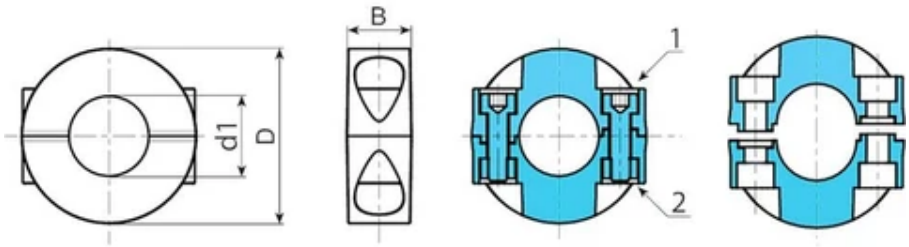

Code	Art.	D	B	d1	DIN 912	Weight (g)
Y713026.0001	Y713026.TD0301HIN	26	13	3	M4x14	17
Y713026.0002	Y713026.TD0401HIN	26	13	4	M4x14	16
Y713026.0003	Y713026.TD0501HIN	26	13	5	M4x14	15
Y713026.0004	Y713026.TD0601HIN	26	13	6	M4x14	14
Y713026.0005	Y713026.TD0701HIN	26	13	7	M4x14	13
Y713035.0001	Y713035.TD0801HIN	35	13	8	M4x16	25
Y713035.0002	Y713035.TD0901HIN	35	13	9	M4x16	24
Y713035.0003	Y713035.TD1001HIN	35	13	10	M4x16	23
Y713035.0004	Y713035.TD1101HIN	35	13	11	M4x16	22
Y713035.0005	Y713035.TD1201HIN	35	13	12	M4x16	21
Y713035.0006	Y713035.TD1301HIN	35	13	13	M4x16	20
Y713035.0007	Y713035.TD1401HIN	35	13	14	M4x16	19
Y713035.0008	Y713035.TD1501HIN	35	13	15	M4x16	18
Y713040.0001	Y713040.TD1601HIN	40	14	16	M4x16	21
Y713040.0002	Y713040.TD1701HIN	40	14	17	M4x16	20,5
Y713040.0003	Y713040.TD1801HIN	40	14	18	M4x16	20
Y713040.0004	Y713040.TD1901HIN	40	14	19	M4x16	19
Y713040.0005	Y713040.TD2001HIN	40	14	20	M4x16	18
Y713050.0001	Y713050.TD2101HIN	50	14	21	M5x20	34
Y713050.0002	Y713050.TD2201HIN	50	14	22	M5x20	33
Y713050.0003	Y713050.TD2301HIN	50	14	23	M5x20	32,5
Y713050.0004	Y713050.TD2401HIN	50	14	24	M5x20	32
Y713050.0005	Y713050.TD2501HIN	50	14	25	M5x20	31
Y713050.0006	Y713050.TD2601HIN	50	14	26	M5x20	30,5
Y713050.0007	Y713050.TD2801HIN	50	14	28	M5x20	30
Y713050.0008	Y713050.TD3001HIN	50	14	30	M5x20	29
Y713065.0001	Y713065.TD3201HIN	65	14	32	M5x20	45
Y713065.0002	Y713065.TD3401HIN	65	14	34	M5x20	44
Y713065.0003	Y713065.TD3501HIN	65	14	35	M5x20	43
Y713065.0004	Y713065.TD3601HIN	65	14	36	M5x20	42
Y713065.0005	Y713065.TD3801HIN	65	14	38	M5x20	41
Y713065.0006	Y713065.TD4001HIN	65	14	40	M5x20	40
Y713075.0001	Y713075.TD4201HIN	75	14	42	M5x20	53,5
Y713075.0002	Y713075.TD4501HIN	75	14	45	M5x20	50
Y713075.0003	Y713075.TD4801HIN	75	14	48	M5x20	47,5
Y713075.0004	Y713075.TD5001HIN	75	14	50	M5x20	45

Y718

+200° -40° | C40 | RoHS COMPLIANT

23

STEEL ANGLED BALL JOINT - DIN 71802 - C DESIGN

Giunti angolari

Materials:

Steel with strength class 5.8.

Surface finish:

Turned with low roughness.

Colour:

Standard blue galvanising.

Inserts:

(1) Steel ball joint with threaded hole.

(3) Harmonic steel spring ring.

(4) Steel nut with threaded hole (DIN 934).

(2) Ball insert with milled seat for wrench and threaded stud machined from solid steel (thread tolerance 6g).

Standard version:

Right-hand thread (thread tolerance 6H).

Version SX (LH):

Left-hand thread (thread tolerance 6H). Identifiable by the groove on the joint.

Special requests:

None.

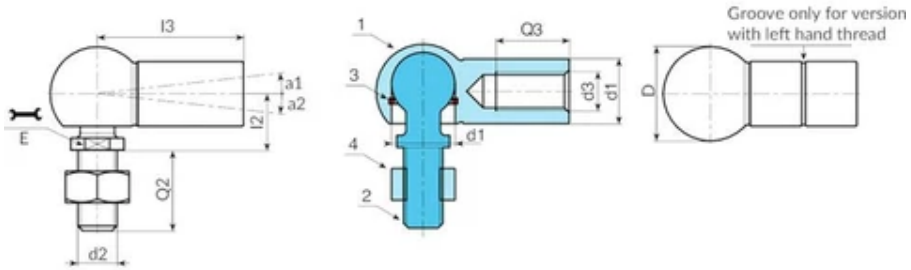

Version 718 - joint with standard thread

Code	Art.	d2 6g	d3 6H	D	E	I2	I3	Q2	d1#r# h9-H9	Q3	a1	a2	Weight (g)
Y71808.0001	Y71808.VZM05	M5	M5	12,8	7	9	22	10,2	8	10,2	18	18	15
Y71810.0001	Y71810.VZM06	M6	M6	14,8	8	11	25	11,5	10	11,5	18	18	25
Y71813.0001	Y71813.VZM08	M8	M8	19,3	11	13	30	14	13	14	18	18	53
Y71816.0001	Y71816.VZM10	M10	M10	24	13	16	35	15,5	16	15,5	18	18	104
Y71819.0001	Y71819.VZM14X1.5	M14X1,5	M14X1,5	30	16	20	45	21,5	19	21,5	-	15	221

Version 718 - joint with LH thread

Code	Art.	d2 6g	d3 6H	D	E	I2	I3	Q2	d1#r# h9-H9	Q3	a1	a2	Weight (g)
Y71808.0002	Y71808.VZM05SX	M5	M5 SX	12.8	7	9	22	10,2	8	10,2	18	18	15
Y71810.0002	Y71810.VZM06SX	M6	M6 SX	14.8	8	11	25	11,5	10	11,5	18	18	25
Y71813.0002	Y71813.VZM08SX	M8	M8 SX	19,3	11	13	30	14	13	14	18	18	53
Y71816.0002	Y71816.VZM10SX	M10	M10 SX	24	13	16	35	15,5	16	15,5	18	18	104
Y71819.0002	Y71819.VZM14X1.5SX	M14X1,5	M14X1,5 SX	30	16	20	45	21,5	19	21,5	18	18	221

Y719

+200° -40° | C40 | Aisi 303 | RoHS COMPLIANT

23

STEEL ANGLED BALL JOINT WITH SAFETY CATCH - DIN 71802 - CS DESIGN

Giunti angolari

Materials:

Y719:

Steel with strength class 5.8.

Y719CIN:

Stainless steel (Aisi 303).

Surface finish:

Turned with low roughness.

Colour:

Y719:

Standard blue galvanising.

Y719CIN:

Natural.

Inserts:

(2) Ball insert with milled seat for wrench and threaded stud machined from solid materal (thread tolerance 6g).

Y719: steel - Y719CIN: stainless steel (Aisi 303).

(3) Harmonic steel spring ring.

(4) Nut with threaded hole (DIN 934).

Y719: steel - Y719CIN: stainless steel (Aisi 304).

(5) Safety catch to retain the ball with a shaped spring. (Y719: harmonic steel) (Y719CIN: natural stainless steel).

(1) Ball joint with threaded hole and hole for safety spring.

Y719: steel - Y719CIN: stainless steel (Aisi 303).

Standard version:

Right-hand thread (thread tolerance 6H).

Version SX (LH):

Left-hand thread (thread tolerance 6H). Identifiable by the groove on the joint.

Special requests:

None.

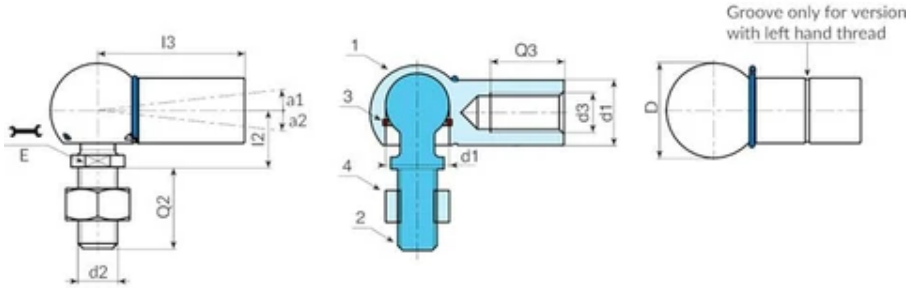

Version 719 - joint with standard thread

Code	Art.	d2 6g	d3 6H	D	E	l2	l3	Q2	d1#r# h9-H9	Q3	a1	a2	Weight (g)
Y71908.0003	Y71908.VZM05	M5	M5	12,8	7	9	22	10,2	8	10,2	18	10	15
Y71910.0003	Y71910.VZM06	M6	M6	14,8	8	11	25	11,5	10	11,5	18	15	25
Y71913.0003	Y71913.VZM08	M8	M8	19,3	11	13	30	14	13	14	18	15	53
Y71916.0003	Y71916.VZM10	M10	M10	24	13	16	35	15,5	16	15,5	18	15	104
Y71919.0003	Y71919.VZM14X1.5	M14X1,5	M14X1,5	30	16	20	45	21,5	19	21,5	18	15	221

Version 719 - joint with LH thread

Code	Art.	d2 6g	d3 6H	D	E	l2	l3	Q2	d1#r# h9-H9	Q3	a1	a2	Weight (g)
Y71908.0004	Y71908.VZM05SX	M5	M5 SX	12,8	7	9	22	10,2	8	10,2	18	10	15
Y71910.0004	Y71910.VZM06SX	M6	M6 SX	14,8	8	11	25	11,5	10	11,5	18	15	25
Y71913.0004	Y71913.VZM08SX	M8	M8 SX	19,3	11	13	30	14	13	14	18	15	53
Y71916.0004	Y71916.VZM10SX	M10	M10 SX	24	13	16	35	15,5	16	15,5	18	15	104
Y71919.0004	Y71919.VZM14X1.5SX	M14X1,5	M14X1,5 SX	30	16	20	45	21,5	19	21,5	18	15	221

Version 719CIN - joint with standard thread - STAINLESS STEEL

Code	Art.	d2 6g	d3 6H	D	E	l2	l3	Q2	d1#r# h9-H9	Q3	a1	a2	Weight (g)
Y71908.0001	Y71908.INM05CIN	M5	M5	12.8	7	9	22	10,2	8	10,2	18	10	15
Y71910.0001	Y71910.INM06CIN	M6	M6	14,8	8	11	25	11,5	10	11,5	18	15	25
Y71913.0001	Y71913.INM08CIN	M8	M8	19,3	11	13	30	14	13	14	18	15	53

Code	Art.	d2 6g	d3 6H	D	E	l2	l3	Q2	d1#r# h9-H9	Q3	a1	a2	Weight (g)
Y71916.0001	Y71916.INM10CIN	M10	M10	24	13	16	35	15,5	16	15,5	18	15	104
Y71919.0001	Y71919.INM14X1.5CIN	M14X1,5	M14X1,5	30	16	20	45	21,5	19	21,5	18	15	221

Version 719CIN - joint with LH thread - STAINLESS STEEL

Code	Art.	d2 6g	d3 6H	D	E	l2	l3	Q2	d1#r# h9-H9	Q3	a1	a2	Weight (g)
Y71908.0002	Y71908.INM05SXCIN	M5	M5 SX	12,8	7	9	22	10,2	8	10,2	18	10	15
Y71910.0002	Y71910.INM06SXCIN	M6	M6 SX	14,8	8	11	25	11,5	10	11,5	18	15	25
Y71913.0002	Y71913.INM08SXCIN	M8	M8 SX	19,3	11	13	30	14	13	14	18	15	53
Y71916.0002	Y71916.INM10SXCIN	M10	M10 SX	24	13	16	35	15,5	16	15,5	18	15	104
Y71919.0002	Y71919.INM14X1.5SXCIN	M14X1,5	M14X1,5 SX	30	16	20	45	21,5	19	21,5	18	15	221