R530

+60° -20° | PS | RoHS COMPLIANT

20

LARGE 4 WAY TERMINAL BLOCK

Morsettiere e coperchi

Materials:
Impact resistant polystyrene.

Surface finish:
Smooth.

Colour:
Black (RAL 9011).

Inserts:
Brass insert with threaded through hole.
Galvanised steel screw M4x10 DIN 84.

Special requests:
None.

Compatible accessories:
Terminal block cover article R531.

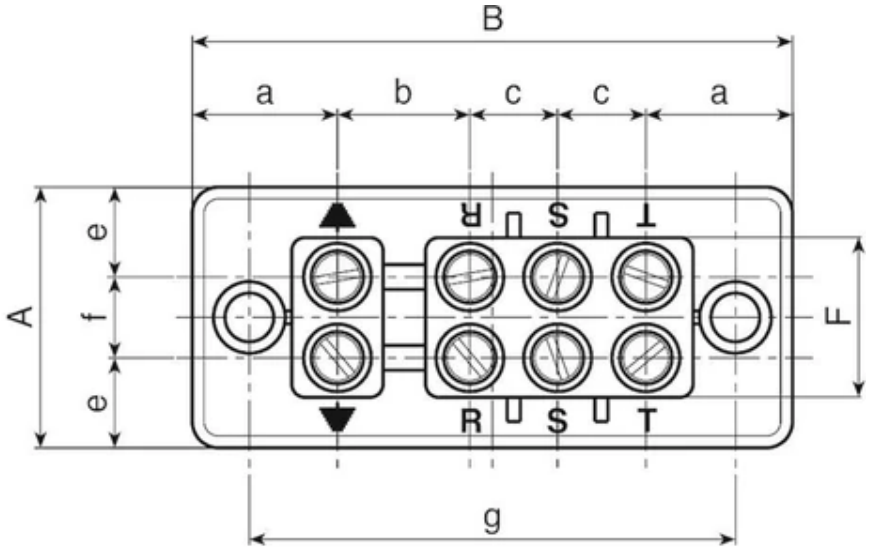

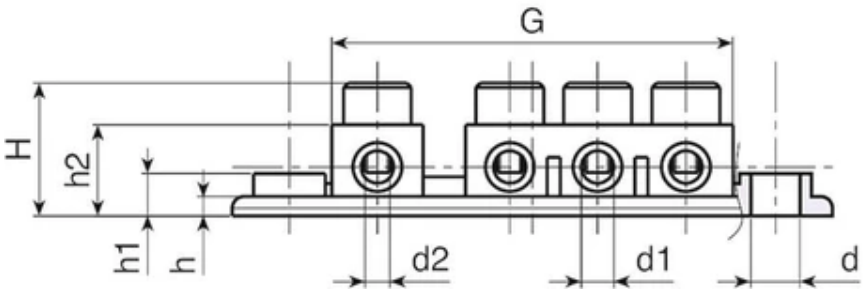

Code	Art.	A	B	H	F	G	a	b	c	e	f	g	h	h1	h2	d	d1
R53091.0001	R53091.P01	40,5	92,5	21	25	62,5	22	20,5	13.5	14	12.5	75	3,5	7	15,5	7,5	5

Code	Art.	d2	Weight (g)
R53091.0001	R53091.P01	M4	70

R531

+60° -20° | PS | RoHS COMPLIANT

20

TERMINAL BLOCK COVER FOR TERMINAL R530

Morsettiere e coperchi

Materials:
Impact resistant polystyrene.

Surface finish:
Smooth.

Colour:
Black (RAL 9011).

Special requests:
None.

Compatible accessories:
4 way terminal block article R530.

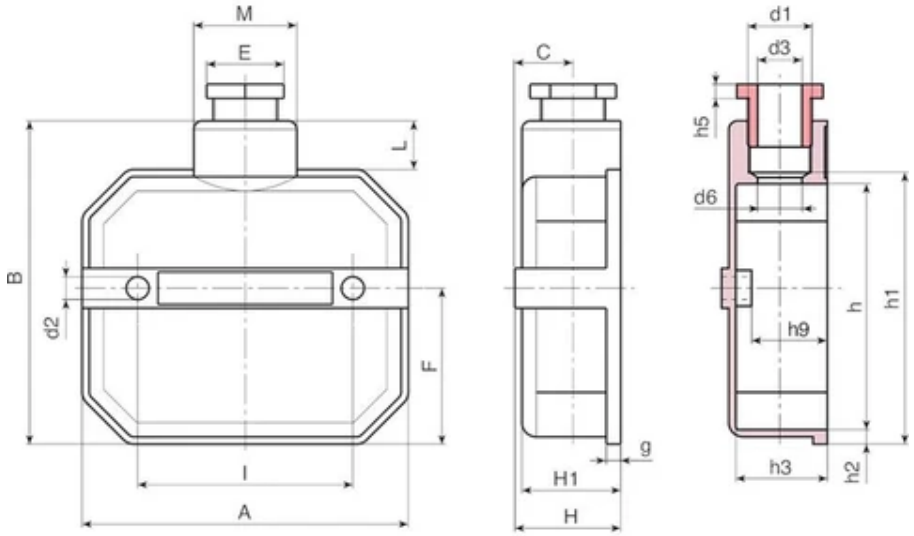

Code	Art.	A	B	C	E	F	H	H1	I	L	M	d1	d2	d3	d6	g	h
R531114PG16.0001	R531114PG16.P01	114	114	20,5	27	53,5	37	35	75	18	35,5	PG16	7,5	17,5	16	5	86

Code	Art.	h1	h2	h3	h5	h9	Weight (g)
R531114PG16.0001	R531114PG16.P01	96	5	32,5	5	27,5	86

R532

+60° -20° | PS | RoHS COMPLIANT

20

SMALL 4 WAY TERMINAL BLOCK

Morsettiere e coperchi

Materials:
Impact resistant polystyrene.

Surface finish:
Smooth.

Colour:
Black (RAL 9011).

Inserts:
Brass insert with threaded through hole.
Galvanised steel screw M4x10 DIN 84.

Special requests:
None.

Compatible accessories:
Terminal block cover article R533.

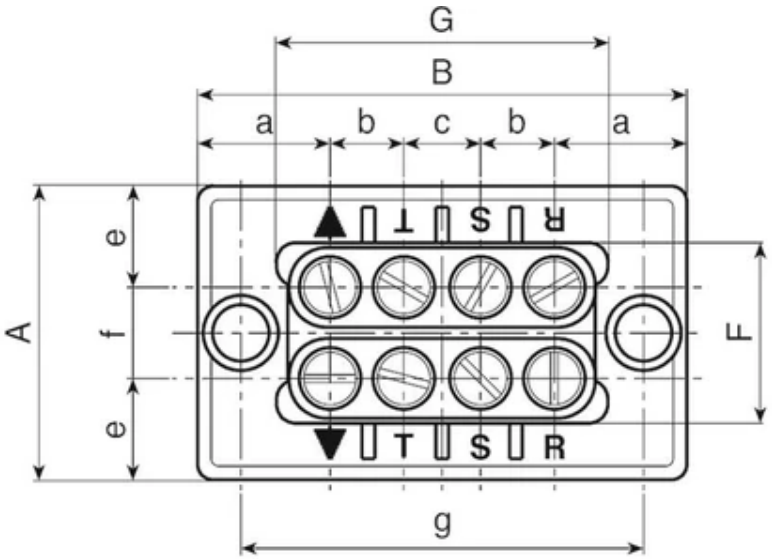

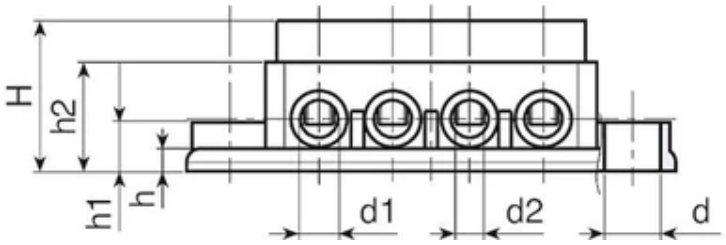

Code	Art.	A	B	H	F	G	a	b	c	e	f	g	h	h1	h2	d	d1
R53265.0001	R53265.P01	39,5	65,5	21	24,5	44	18	9,7	10,3	13,5	12,5	54	3	6	15	7	5

Code	Art.	d2	Weight (g)
R53265.0001	R53265.P01	M4	27

R533

+60° -20° | PS | RoHS COMPLIANT

20

SMALL TERMINAL BLOCK COVER WITH CABLE ENTRY

Morsettiere e coperchi

Materials:
Impact resistant polystyrene.

Surface finish:
Smooth.

Colour:
Black (RAL 9011).

Special requests:
None.

Compatible accessories:
Terminal block article R532.

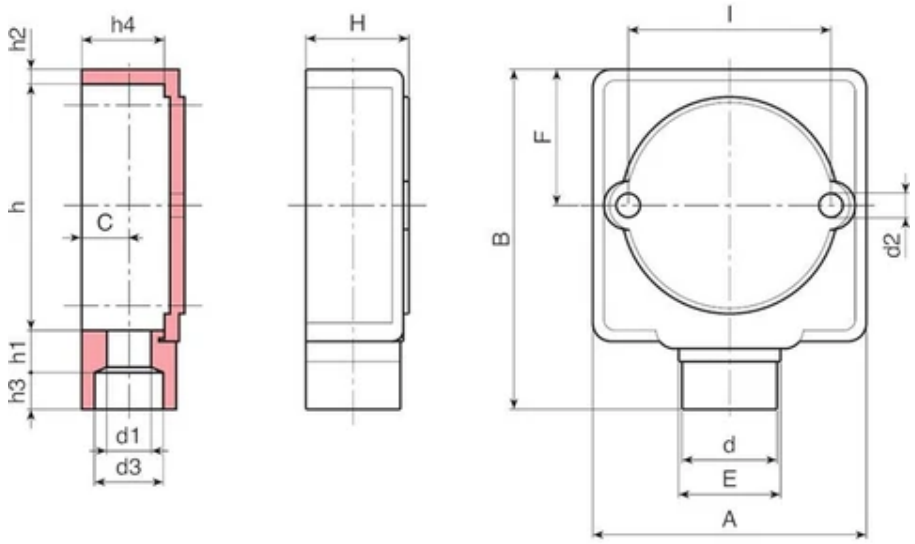

Code	Art.	A	B	H	I	C	E	F	d	d1	d2	d3	h	h1	h2	h3	h4
R53376.0001	R53376.P01	75	92	29	53	13	28	37,5	26	12	6.5	19	67	11.5	4	10	23

Code	Art.	Weight (g)
R53376.0001	R53376.P01	57

R534

+60° -20° | PS | RoHS COMPLIANT

20

5 WAY TERMINAL BLOCK

Morsettiere e coperchi

Materials:
Impact resistant polystyrene.

Surface finish:
Smooth.

Colour:
Black (RAL 9011).

Inserts:
Brass insert with threaded through hole.
Galvanised steel screw M4x10 DIN 84.

Special requests:
None.

Compatible accessories:
Terminal block cover article R535.
Terminal block cover article R531.

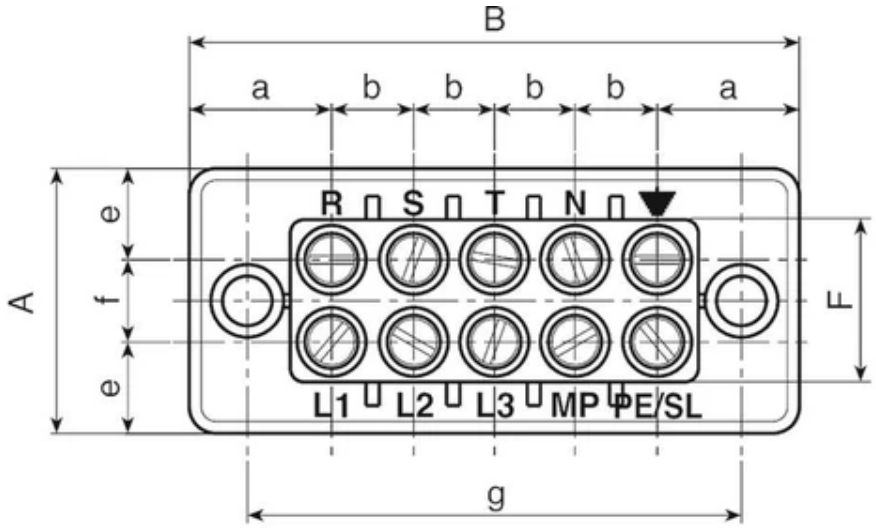

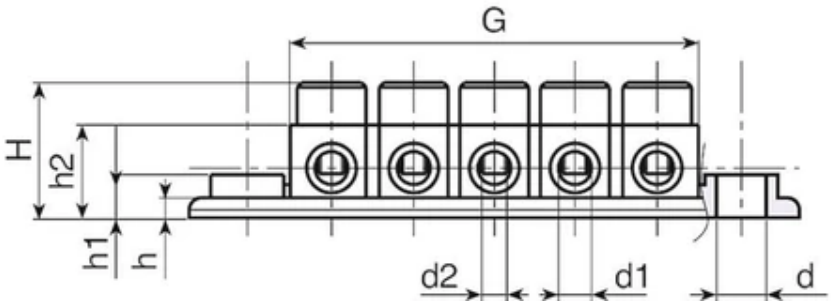

Code	Art.	A	B	H	F	G	a	b	g	e	f	h	h1	h2	d	d1	d2
R53491.0001	R53491.P01	40,5	92,5	21	25	62,5	21,5	12,5	75	14	12,5	3	7	15,5	7,5	5	M4

Code	Art.	Weight (g)
R53491.0001	R53491.P01	83

R535

+60° -20° | PS | RoHS COMPLIANT

20 TERMINAL BLOCK COVER WITH MOUNTING PLATE AND GASKET AND CABLE ENTRY PG16

Morsettiere e coperchi

Materials:
(1-2-4) Polistirolo antiurto.
(3-5) Thermoplastic rubber 75 shore.

Surface finish:
Smooth.

Colour:
Black (RAL 9011).

Special requests:
None.

Compatible accessories:
4 way terminal block article R530.
5 way terminal block article R534.

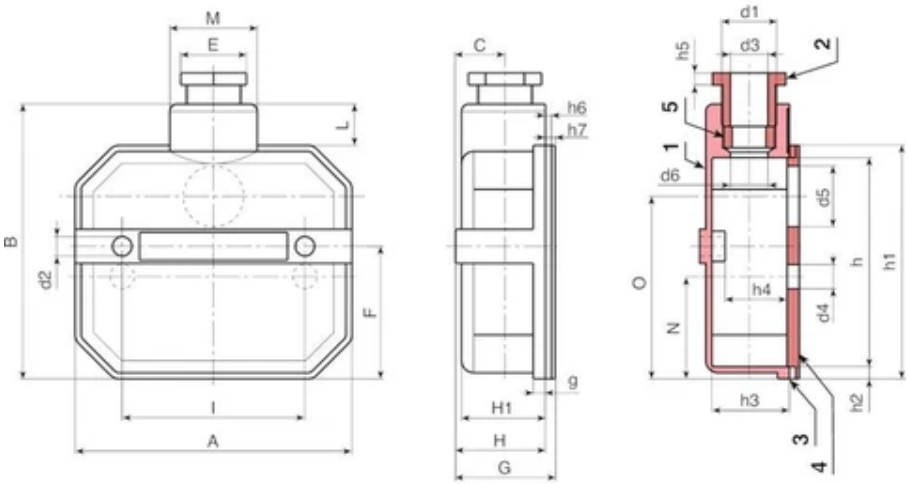

Code	art.	A	B	C	E	F	G	H	H1	I	L	M	N	O	d1	d2	d3
R535114.0001	R535114.P01	114	114	20,5	27	53,5	41,5	37	35	75	18	35,5	42	75	PG16	7,5	17,5

Code	art.	d4	d5	d6	g	h	h1	h2	h3	h4	h5	h6	h7	Weight (g)
R535114.0001	R535114.P01	9	25	16	5	86	96	5	32,5	25	5	2,5	4	115

R536

+60° -20° | PS | RoHS COMPLIANT

20 TERMINAL BLOCK COVER WITH DIAGONAL HOLES AND CABLE ENTRY

Morsettiere e coperchi

Materials:
Impact resistant polystyrene.

Surface finish:
Smooth.

Colour:
Black (RAL 9011).

Special requests:
None.

Compatible accessories:
Terminal block article R532.

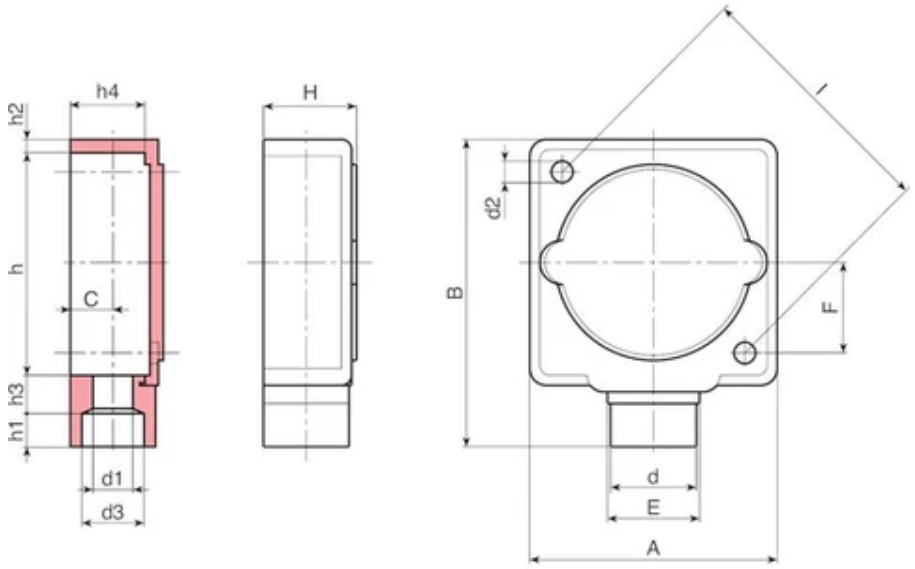

Code	Art.	A	B	H	l	C	E	F	d	d1	d2	d3	h	h1	h2	h3	h4
R53676.0002	R53676.P01	75	92	29	78,5	13	28	28	26	12	6,5	19	67	11.5	4	10	23

Code	Art.	Weight (g)
R53676.0002	R53676.P01	57

R537

+60° -20° | PS | RoHS COMPLIANT

20 COMPLETE "SEALED" 5 WAY TERMINAL BLOCK

Morsettiere e coperchi

Materials:
(1-3) Impact resistant polystyrene.

Surface finish:
Smooth.

Colour:
Black (RAL 9011).

Inserts:
Brass insert with threaded through hole.
(4) Galvanised self-tapping screw 4.2x22 DIN 7981/UNI6954.
(2) Thermoplastic rubber 75 shore.
(5) Galvanised steel screw M4x10 DIN 84.
(6) Rear terminal block cover.

Degree of protection:
IP54.

Special Requests:
None.

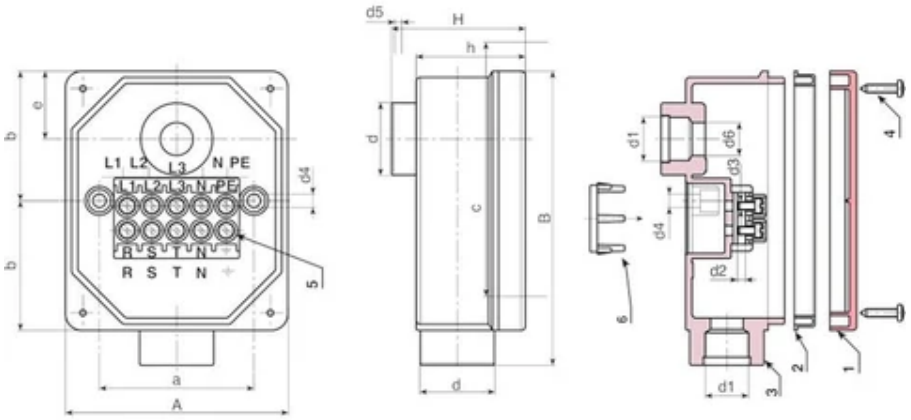

Code	Art.	A	B	H	h	d	a	b	c	e	d1	d2	d3	d4	d5	d6	Weight (g)
R537126M25.0001	R537126M25.P01(*)	108,5	144	67,5	54,5	36	75	63	120,5	30	M25x1,5	5	M4	6	3.5	18,5	345

(*) Lockable cable section: 2,5mm2 3-cable (220V) or 1,5mm2 5-cable (380V).

R551

+60° -20° | PS | RoHS COMPLIANT

20 PLANE GUARD (Boomerang)

Protezione mandrini

Materials:
Impact resistant polystyrene.

Surface finish:
Satin.

Colour:
Orange (RAL 2004).

Hole:
Smooth through hole obtained by moulding the plastic.

Special requests:
None.

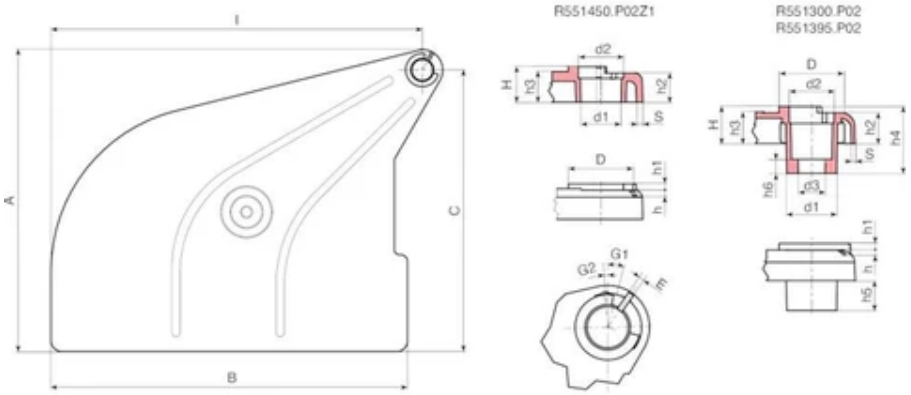

Code	Art.	A	B	C	I	D	E	S	H	G1	G2	h	h1	h2	h3	h4	h5
R551300.0001	R551300.P02	264	314	235	340	41	3	2,5	23	-	10	7	4	19	19	41,5	18,5
R551395.0001	R551395.P02	281	357	255	372	41	3	2,5	23	15	10	6,5	4	18	19,5	41,5	18,5
R551450.0001	R551450.P02Z1	370	436	344	455	41	3,5	4	22	10	4	3,5	4	18	19	-	-

Code	Art.	h6	d1	d2	d3	d4	Weight (g)
R551300.0001	R551300.P02	8,5	25	28	16,5	30,5	320
R551395.0001	R551395.P02	9	25	28	16,5	30,5	420
R551450.0001	R551450.P02Z1	-	25	28	-	-	745

R552

+135° -30° | PA6 +G.F. | RoHS COMPLIANT

20 SPINDLE GUARD

Protezione mandrini

Materials:
Reinforced polyamide.
Resistant to oils and greases.

Surface finish:
Smooth.

Colour:
Black (RAL 9011).

Special requests:
None.

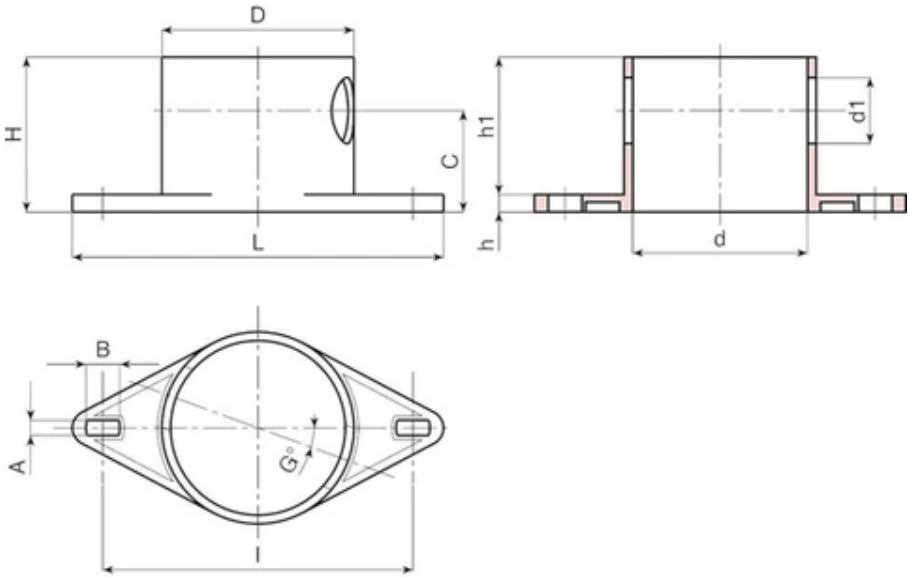

Code	Art.	H	D	d	L	l	A	B	G	c	h	h1	d1	Weight (g)
R552170.0001	R552170.T01	71	88	80	170	142	7	15	20	46.5	8	63	30	104

R553AP

+135° -30° | PA6 +G.F. | RoHS COMPLIANT

20 OPEN SPINDLE GUARD

Protezione mandrini

Materials:
Reinforced polyamide.
Resistant to oils and greases.

Surface finish:
Smooth.

Colour:
Black (RAL 9011).

Special requests:
None.

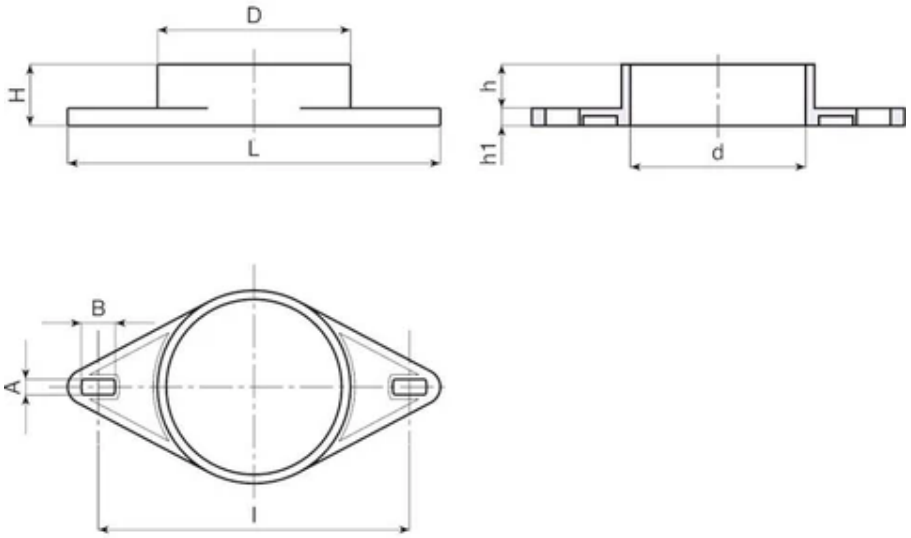

Code	Art.	H	D	d	L	l	A	B	h	h1	Weight (g)
R553170AP.0001	R553170AP.T01	28	88	80	170	142	7	15	8	20	50

R553CH

+135° -30° | PA6 +G.F. | RoHS COMPLIANT

20 CLOSED SPINDLE GUARD

Protezione mandrini

Materials:
Reinforced polyamide.
Resistant to oils and greases.

Surface finish:
Smooth.

Colour:
Black (RAL 9011).

Special requests:
None.

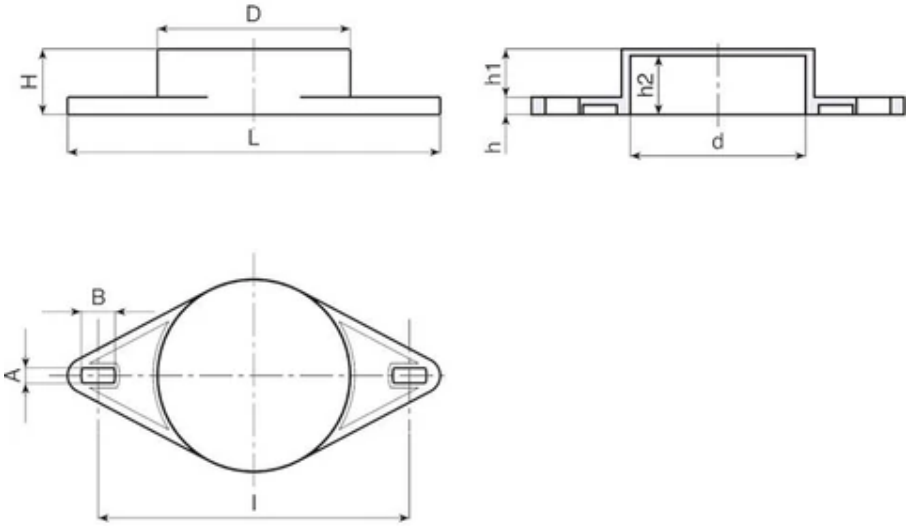

Code	Art.	H	D	d	L	l	A	B	h	h1	h2	Weight (g)
R553170CH.0001	R553170CH.T01	30,5	88	80	170	142	7	15	8	22,5	27,5	90

R554

+60° -20° | PS | RoHS COMPLIANT

20

WESCOT SPINDLE GUARD

Protezione mandrini

Materials:
Impact resistant polystyrene.

Surface finish:
Smooth.

Colour:
Black (RAL 9011).

Special requests:
None.

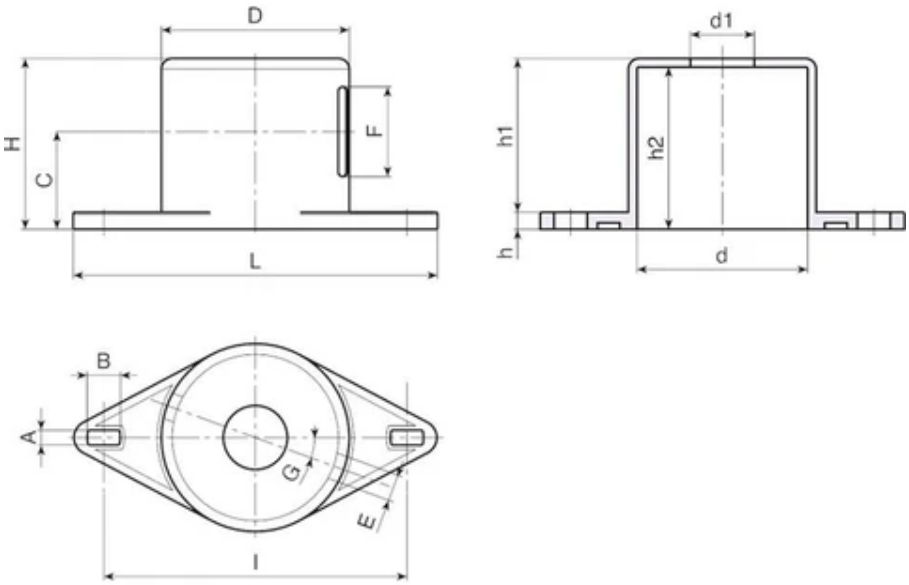

Code	Art.	H	D	d	L	I	A	B	E	F	G	C	h	h1	h2	d1	Weight (g)
R554170.0001	R554170.T01	80	88	79,6	170	142	7	15	12.5	42	20	46	8	72	75,6	30	120

R555

+60° -20° | PS | RoHS COMPLIANT

20 SPINDLE GUARD WITHOUT SIDE HOLES

Protezione mandrini

Materials:
Impact resistant polystyrene.

Surface finish:
Smooth.

Colour:
Black (RAL 9011).

Special requests:
None.

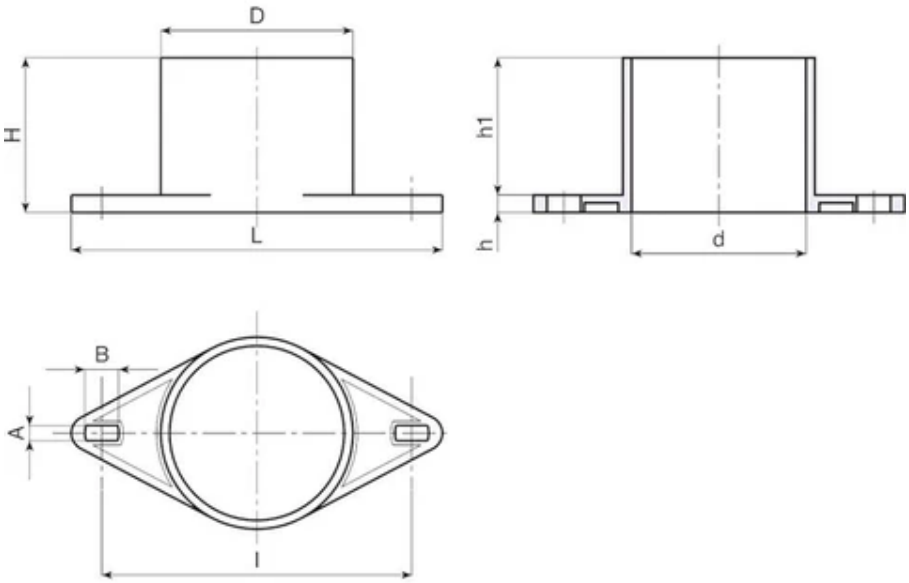

Code	Art.	H	D	d	L	l	A	B	h	h1	Weight (g)
R555170.0001	R555170.T01	71	88	80	170	142	7	15	8	63	100

R809

+135° -30° | PA6 +G.F. | RoHS COMPLIANT

20 BAR STOP

Materials:
Reinforced polyamide.
Resistant to oils and greases.

Surface finish:
Satin.

Colour:
Black (RAL 9011).

Hole:
Smooth through hole obtained by moulding the plastic.

Inserts:
(1) Galvanised steel nut with threaded through hole DIN 934 / UNI 5588

Locking handwheel:
R809130: art. G73230.TM06X25.
R809158: art. G73240.TM06X30.

Special requests:
None.

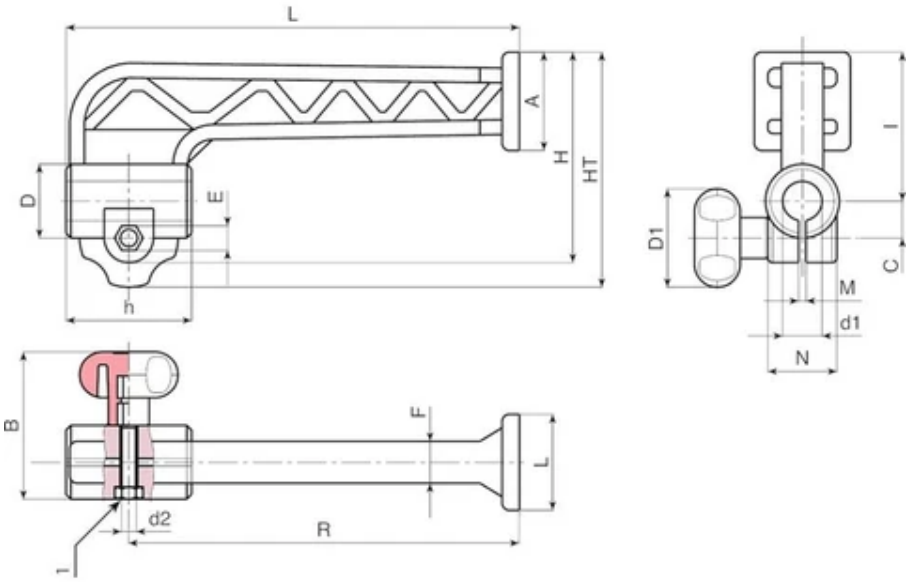

Code	Art.	R	L	H	HT	D	D1	A	B	C	E	F	I	M	N	h	d1
R809130.0001	R809130.TD1201	132	150	85	90	24,5	30	25	47	12	10	14,5	63	2	24,5	35	12
R809130.0002	R809130.TD1301	132	150	85	90	24,5	30	25	47	12	10	14,5	63	2	24,5	35	13
R809130.0003	R809130.TD1601	132	150	85	90	24,5	30	25	47	12	10	14,5	63	2	24,5	35	16
R809158.0001	R809158.TD1601	158	183	92	102	29	40	40	57	14,5	10	17	67	2	28,5	51	16
R809158.0002	R809158.TD2001	158	183	92	102	29	40	40	57	14,5	10	17	67	2	28,5	51	20

Code	Art.	d2	Weight (g)
R809130.0001	R809130.TD1201	M6	70
R809130.0002	R809130.TD1301	M6	70
R809130.0003	R809130.TD1601	M6	67
R809158.0001	R809158.TD1601	M6	130
R809158.0002	R809158.TD2001	M6	130

T200

+135° -30° | PA6 +G.F. | RoHS COMPLIANT

20 CROSS CLAMP WITH 90° HOLES AND SCREW FIXING

Accessori per trasporto

Materials:

Reinforced polyamide.

Resistant to oils and greases.

Surface finish:

Satin.

Colour:

Black (RAL 9011).

Inserts:

(1) Galvanised steel hexagon socket head cap screw TCCE DIN 912.

Galvanised steel nut with threaded through hole DIN 934/UNI 5588.

Hole:

Smooth through hole obtained by moulding the plastic.

Special requests:

Upon request and for special quantities the clamp can be supplied with holes d1 and d2 to customer's drawing.

Upon request and for special quantities the clamp can be supplied with holes d1 and d2 square.

Upon request and for special quantities available in the colours indicated in the chart on page TitoloTabellaColori .

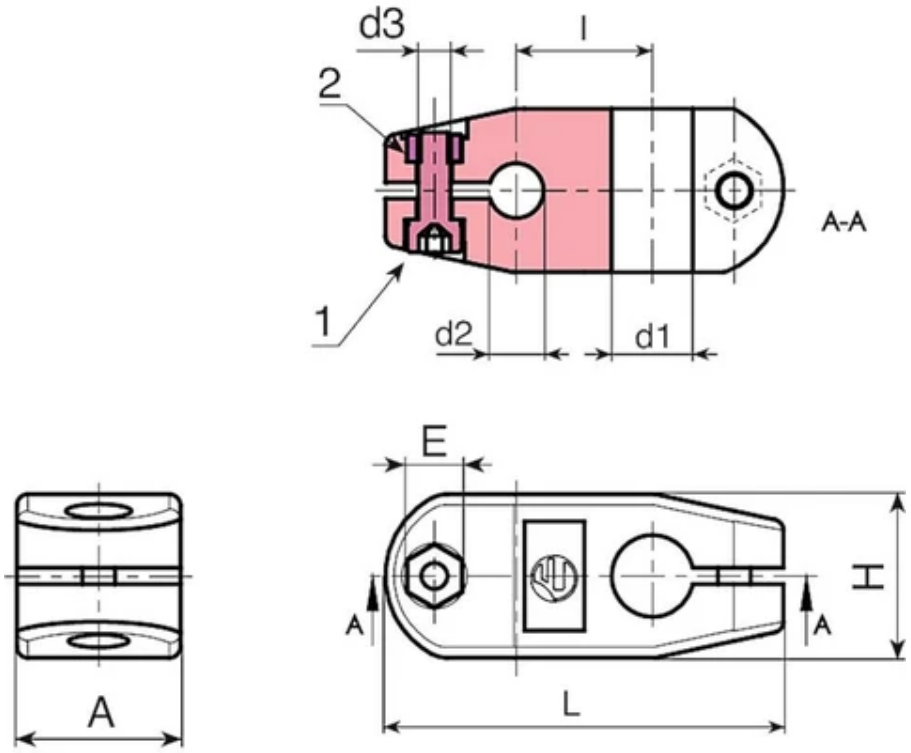

Code	art.	L	A	H	E	l	c	d3	d1	d2	Weight (g)
T20073.0003	T20073.TG121001	73	30	30	10	25	2,8	M06	12	10	72
T20073.0004	T20073.TG121201	73	30	30	10	25	2,8	M06	12	12	70
T20073.0005	T20073.TG121401	73	30	30	10	25	2,8	M06	12	14	69
T20073.0006	T20073.TG121601	73	30	30	10	25	2,8	M06	12	16	68

T251

+135° -30° | PA6 +G.F. | RoHS COMPLIANT

20

WOOD PANEL PRESSER

Accessori per macc. a legno

Materials:
Reinforced polyamide.
Resistant to oils and greases.

Surface finish:
Satin.

Colour:
Black (RAL 9011).

Inserts:
Galvanised steel nut with threaded through hole DIN 934/UNI 5588.

Special requests:
None.

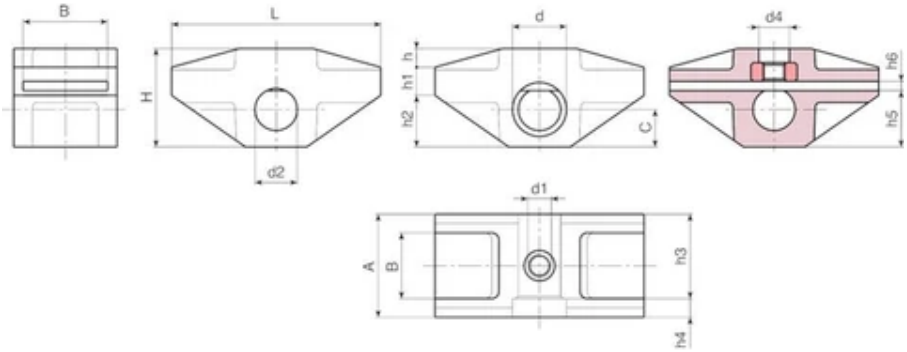

Code	art.	L	H	A	B	c	E	d	d2	d3	h	h1	h2	h3	h4	h5	h6
T25190.0001	T25190.TM1001	89	42	44	29	16	36	23	18	13.5	10	12	20	35	9	24.5	3

Code	art.	d1	Weight (g)
T25190.0001	T25190.TM1001	M10	100

T252

CE | +135° -30° | PA6 +G.F. | RoHS COMPLIANT

20

SAFETY PUSH STICK FOR WOOD (ACCESSORY FOR T556)

Accessori per macc. a legno

Materials:
Reinforced polyamide.
Resistant to oils and greases.

Surface finish:
Satin.

Colour:

Black	(RAL 9011 code 01).
Orange	(RAL 2004 code 02).
Orange	(RAL 2011 code 03).
Yellow	(RAL 1007 code 09).

Special requests:
None.

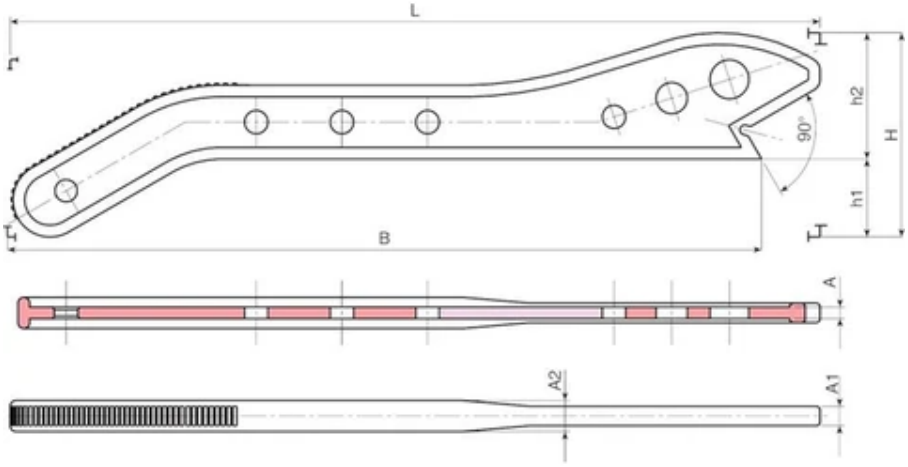

Code	art.	L	B	H	h1	h2	A	A1	A2	Weight (g)
T252420.0001	T252420.T01	415	386	105	40	65	6	10	16	160
T252420.0002	T252420.T02	415	386	105	40	65	6	10	16	160
T252420.0003	T252420.T03	415	386	105	40	65	6	10	16	160

Code	art.	L	B	H	h1	h2	A	A1	A2	Weight (g)
T252420.0004	T252420.T09	415	386	105	40	65	6	10	16	160

T253

+135° -30° | PA6 +G.F. | RoHS COMPLIANT

20 HOLDER FOR SAFETY PUSH STICK FOR WOOD (ACCESSORY FOR T252)

Accessori per macc. a legno

Materials:
Reinforced polyamide.
Resistant to oils and greases.

Surface finish:
Satin.

Colour:
Black (RAL 9011 code 01).

Special requests:
None.

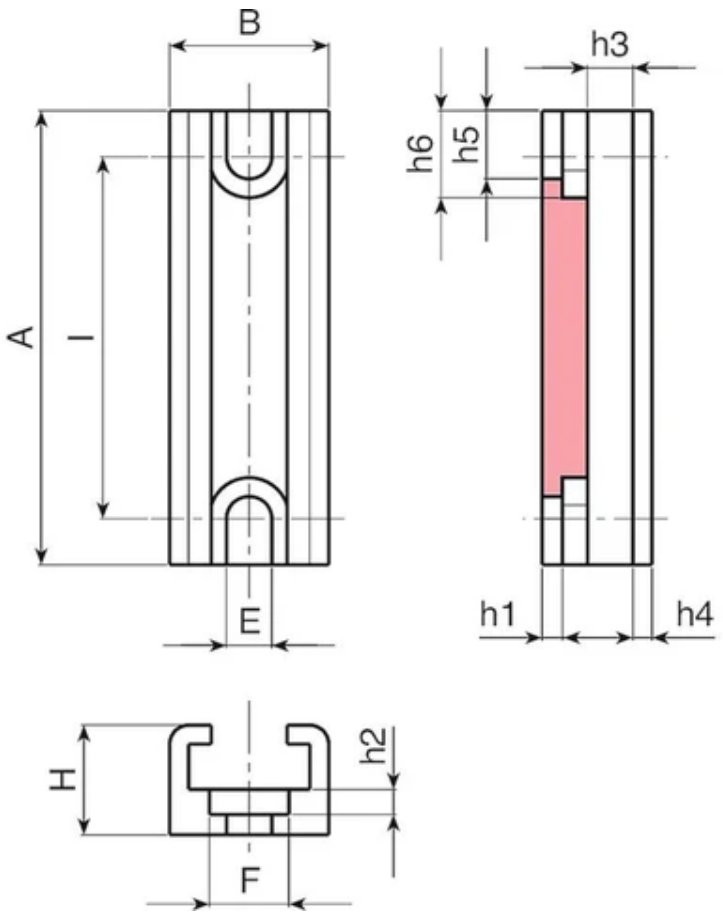

Code	Art.	A	B	H	l	E	F	h1	h2	h3	h4	h5	h6	Weight (g)
T25360.0001	T25360.T01	60	21.5	14.5	48	6.5	10.5	2.7	3.3	6	2.5	9	11.5	13

T480

+60° -20° LDPE RoHS COMPLIANT

20 ROUND TUBE PLUG

Tappi per prodotti Boteco

Materials:
Round plug with round lamellar insert in Polyethylene (LDPE).

Surface finish:
Satin.

Colour:
Black (RAL 9011).

Fixing method:
Push-fit.

Special requests:
None.

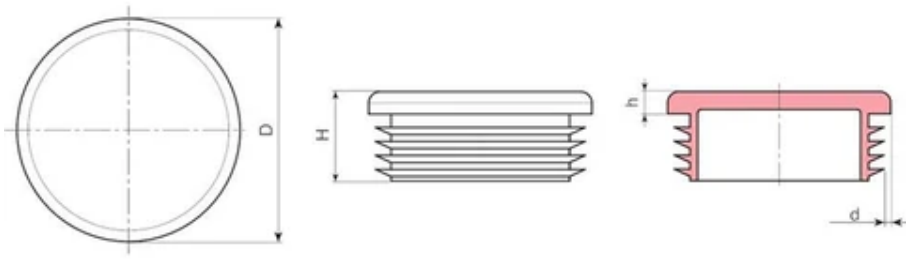

Code	art.	D	H	h	d thickness of the tube (min - max)	Weight (g)
T480010.0001	T480010.D01	10	11	3.5	1-2	0.5
T480012.0001	T480012.D01	12	11	3.5	1-2	0.5
T480013.0001	T480013.D01	13	11	4	1-2	0.5
T480014.0001	T480014.D01	14	11,5	5	1-2	1

Code	art.	D	H	h	d thickness of the tube (min - max)	Weight (g)
T480015.0001	T480015.D01	15	13	3	1-2	1
T480016.0001	T480016.D01	16	11	5	1-2	1.5
T480018.0001	T480018.D01	18	11,5	5	1-2,5	1.5
T480019.0001	T480019.D01	19	11,5	5	1-2,5	1.8
T480020.0001	T480020.D01	20	11,5	5	1-2,5	2
T480022.0001	T480022.D01	22	11,5	5	1-2	2
T480023.0001	T480023.D01	23	11,5	5	1-2,5	2.5
T480024.0001	T480024.D01	24	11,5	5	1-2,5	2.5
T480025.0001	T480025.D01	25	11,5	5	1-3	2.5
T480026.0001	T480026.D01	26	11,5	5	1-3	3
T480027.0001	T480027.D01	27	11,5	5	1-3	3
T480028.0001	T480028.D01	28	11,5	5	1-2,5	3
T480030.0001	T480030.D01	30	11,5	5	1-2,5	4
T480032.0001	T480032.D01	32	12	5	1-2,5	3.5
T480034.0001	T480034.D01	34	11,5	5	1-3	5
T480035.0001	T480035.D01	35	11,5	5	1-3	4.5
T480036.0001	T480036.D01	36	11,5	5	1-3	4.5
T480037.0001	T480037.D01	37	11,5	5	1-3	5
T480038.0001	T480038.D01	38	11,5	5	1-3,5	5.5
T480040.0001	T480040.D01	40	11,5	5	1-3	5.5
T480042.0001	T480042.D01	42	11,5	5	1-3	7
T480043.0001	T480043.D01	43	11,5	5	2-2,5	7
T480045.0001	T480045.D01	45	11	5	1-3	7
T480046.0001	T480046.D01	46	11,5	5	1,5-3,5	7.5
T480048.0001	T480048.D01	48	11,5	5	1,2-3,6	7.8
T480050.0001	T480050.D01	50	11,5	5	1-2,5	8
T480052.0001	T480052.D01	52	14,5	5	1,5-3,5	9.5
T480055.0001	T480055.D01	55	14,5	5	1-3	9.5
T480060.0001	T480060.D01	60	18,5	5	1,5-3	16.5
T480065.0001	T480065.D01	65	21	5	1,5-3,5	18.5
T480070.0001	T480070.D01	70	21	5	1,5-4,5	25
T480075.0001	T480075.D01	75	21,5	6	1-3,5	24
T480080.0001	T480080.D01	80	21	4	1,5-3	32.5
T480085.0001	T480085.D01	85	21	6	1,5-4	28
T480090.0001	T480090.D01	90	20	6	1,5-5	34
T480095.0001	T480095.D01	95	21	6	1,5-4	34.5
T480100.0001	T480100.D01	100	28,5	6	2-4,5	43

T481

+60° -20° LDPE RoHS COMPLIANT

20

SQUARE TUBE PLUG

Tappi per prodotti Boteco

Materials:
Square plug with square lamellar insert in Polyethylene (LDPE).

Surface finish:
Satin.

Colour:
Black (RAL 9011).

Fixing method:
Push-fit.

Special requests:
None.

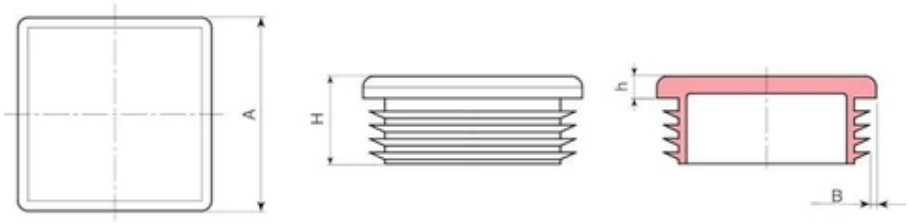

Code	art.	A	H	h	B thickness of the tube (min - max)	Weight (g)
T481010.0001	T481010.D01	10	16	4	0,8-2,5	1
T481012.0001	T481012.D01	12	16	4	1-2	1
T481013.0001	T481013.D01	13	16	4	0,5-2	1
T481015.0001	T481015.D01	15	15,5	4	1-2	1

Code	art.	A	H	h	B thickness of the tube (min - max)	Weight (g)
T481016.0001	T481016.D01	16	16,5	5	1-2,5	1.5
T481018.0001	T481018.D01	18	16,5	5	1,5-3	2
T481020.0001	T481020.D01	20	16,5	5	1-3	2.5
T481022.0001	T481022.D01	22	17	5	1-3,5	2.5
T481025.0001	T481025.D01	25	16,5	5	1-3	3.5
T481028.0001	T481028.D01	28	16,5	5	1-3	4
T481030.0001	T481030.D01	30	16,5	5	1-3	4.5
T481032.0001	T481032.D01	32	16,5	5	1-3,5	6
T481034.0001	T481034.D01	34	19,5	5	1-3	6
T481035.0001	T481035.D01	35	19,5	5	1-3	6
T481038.0001	T481038.D01	38	19,5	5	1-3,5	7.5
T481040.0001	T481040.D01	40	19,5	5	1-3	8
T481045.0001	T481045.D01	45	19,5	5	1-3	9
T481050.0001	T481050.D01	50	19,5	5	1-2,5	11
T481055.0001	T481055.D01	55	19,5	5	2-4,5	12.5
T481060.0001	T481060.D01	60	20	5	1,5-3,5	19
T481065.0001	T481065.D01	65	26	5	1-3	23.5
T481070.0001	T481070.D01	70	24	5	1,5-4	25
T481075.0001	T481075.D01	75	27	6	2-4,5	26.5
T481080.0001	T481080.D01	80	27	6	1,5-4	28
T481090.0001	T481090.D01	90	31	6	3-5	47.5
T481095.0001	T481095.D01	95	27,5	6	3,5-5,5	52
T481100.0001	T481100.D01	100	31	7	1-4	51.5

T482

+60° -20° LDPE RoHS COMPLIANT

20

RECTANGULAR TUBE PLUG

Tappi per prodotti Boteco

Materials:

Rectangular plug with rectangular lamellar insert in Polyethylene (LDPE).

Surface finish:

Satin.

Colour:

Black (RAL 9011).

Fixing method:

Push-fit.

Special requests:

None.

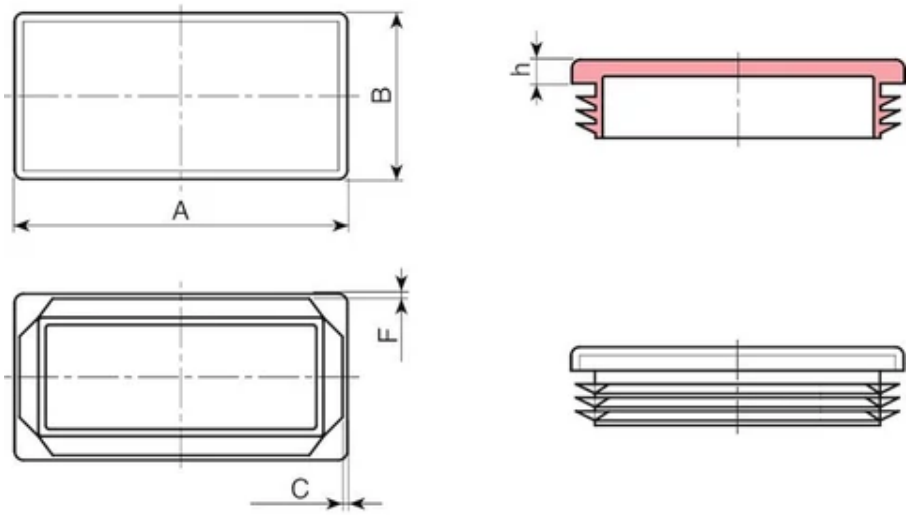

Code	art.	AxB	H	h	CxF thickness of the tube (min - max)	Weight (g)
T482.0007	T482.D20X1001	20x10	11	3	0,8-2	1
T482.0008	T482.D20X1501	20x15	11,5	5	1-2	2,5
T482.0009	T482.D25X1001	25x10	11,5	3	0,8-2	1,5
T482.0010	T482.D25X1501	25x15	11,5	5	1-2,5	2,5

Code	art.	AxB	H	h	CxF thickness of the tube (min - max)	Weight (g)
T482.0011	T482.D25X2001	25x20	11,5	5	1-3	3
T482.0012	T482.D30X1001	30x10	11,5	3	1-2	2
T482.0013	T482.D30X1501	30x15	11,5	5	1-2,5	3
T482.0014	T482.D30X2001	30x20	11,5	5	1-3	3
T482.0015	T482.D35X1001	35x10	11,5	5	1-2	2,5
T482.0016	T482.D35X2001	35x20	11,5	5	1-2,5	4
T482.0017	T482.D35X2501	35x25	11,5	5	1-3	4,5
T482.0018	T482.D40X1501	40x15	12	5	1-2	3,5
T482.0019	T482.D40X2001	40x20	12	5	1-3	6
T482.0020	T482.D40X2501	40x25	11,5	5	1-3	5,5
T482.0021	T482.D40X3001	40x30	12	5	1-3	6,5
T482.0022	T482.D40X3501	40x35	12	5	1-3	7
T482.0023	T482.D45X1501	45x15	11	5	1,5-2	4
T482.0024	T482.D45X2001	45x20	11,5	5	1-3	5
T482.0025	T482.D45X2501	45x25	12	5	1-3	5,5
T482.0026	T482.D45X3001	45x30	12	5	1-2,5	6,5
T482.0027	T482.D45X3501	45x35	12	5	1-3,5	7,5
T482.0028	T482.D50X2001	50x20	14	5	1-3	6
T482.0030	T482.D50X2501	50x25	14,5	5	1-3	7
T482.0032	T482.D50X3001	50x30	13,5	5	1-3	8
T482.0033	T482.D50X3501	50x35	14,5	5	1-3,5	11
T482.0034	T482.D50X4001	50x40	12,5	5	1,5-3	10
T482.0035	T482.D55X4001	55x40	20	5	1,5-4	11,5
T482.0036	T482.D60X2001	60x20	14,5	5	1-3	8
T482.0037	T482.D60X2501	60x25	14	5	1-3	8,5
T482.0038	T482.D60X3001	60x30	15	5	1-3	10
T482.0039	T482.D60X3501	60x35	15	5	1,5-3,5	12
T482.0040	T482.D60X4001	60x40	14	5	1-3	11,5
T482.0041	T482.D60X4501	60x45	15	5	1,5-4	13
T482.0042	T482.D60X5001	60x50	14,5	5	1,5-3,5	14
T482.0043	T482.D70X2001	70x20	19	5	1-3,5	13
T482.0044	T482.D70X2501	70x25	18	5	1,5-2,5	11,5
T482.0045	T482.D70X3001	70x30	18	5	1-3	13
T482.0046	T482.D70X3501	70x35	15	5	1,5-3,5	12
T482.0047	T482.D70X4001	70x40	18	5	1,5-3	17
T482.0048	T482.D80X2001	80x20	18	5	1-3	12
T482.0049	T482.D80X3001	80x30	14,5	5	1-2,5	13
T482.0050	T482.D80X4001	80x40	14,5	5	1-3	15
T482.0051	T482.D80X5001	80x50	18	5	1,5-4	24
T482.0052	T482.D80X6001	80x60	24,5	5	1,5-3,5	26

Code	art.	AxB	H	h	CxF thickness of the tube (min - max)	Weight (g)
T482.0053	T482.D90X2001	90x20	14,5	5	1-2,5	12
T482.0054	T482.D90X4001	90x40	15	5	2-4	17
T482.0055	T482.D90X5001	90x50	22	6	2-4,5	18,5
T482.0056	T482.D90X7001	90x70	22	6	3-5,5	19
T482.0001	T482.D100X3001	100x30	15	5	1,5-3,5	17
T482.0002	T482.D100X4001	100x40	14,5	5	1,5-4	20
T482.0003	T482.D100X5001	100x50	24	6	1,5-4,5	30
T482.0005	T482.D100X6001	100x60	24	6	1,5-4,5	35
T482.0006	T482.D100X8001	100x80	19	6,5	3-5,5	35

T500

+120° -20° | Al 6060 | RoHS COMPLIANT

20 ALUMINIUM TANK PLUG WITH MAGNET

Tappi per prodotti Boteco

Materials:

(1) Aluminium plug (alloy 6060).

(4) Neodymium magnet -NdFeB- (N35SH) resistant up to 120°C.

(2) Pad-printed "MAGNETIC" writing, resistant up to 120°C.

(3) NBR rubber gasket.

Surface finish:

Turned.

Colour:

Natural.

Special requests:

Upon request and for special quantities pad-printings can be supplied to customer's drawing.

Upon request and for special quantities thread d1 can be supplied to customer's drawing.

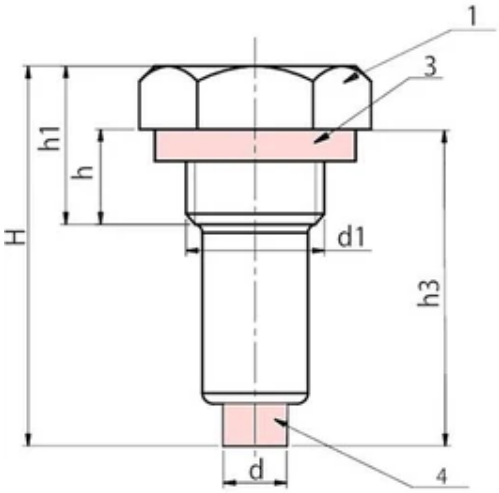

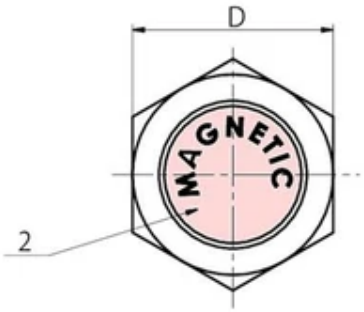

Version with GAS threads

Code	art.	D	d	H	h	h1	h3	d1 (GAS)	Weight (g)
T50019.0001	T50019.AT1-4	19	6	36	9	15	28	1/4	14

Code	art.	D	d	H	h	h1	h3	d1 (GAS)	Weight (g)
T50022.0001	T50022.AT3-8	22	8	36	9	15	30	3/8	21
T50026.0001	T50026.AT1-2	26	8	40	11	18	34	1/2	-
T50032.0001	T50032.AT3-4	32	8	44	12	20	36	3/4	-

Version with metric fine pitch

Code	art.	D	d	H	h	h1	h3	d1	Weight (g)
T50022.0009	T50022.AB16X1.5	22	8	36	9	15	30	M16X1,5	21
T50026.0008	T50026.AB20X1.5	26	8	40	11	18	34	M20X1,5	-
T50032.0008	T50032.AB27X1.5	32	8	44	12	20	36	M27X1,5	-

T501

+200° -20° | Al 6060 | RoHS COMPLIANT

20 ALUMINIUM TANK PLUG WITH MAGNET (RESISTANT UP TO 200 °C)

Tappi per prodotti Boteco

Materials:

(1) Aluminium plug (alloy 6060).

(4) Neodymium magnet -NdFeB- (N35EH) resistant up to 200°C.

(2) Punched "MAGNETIC" writing resistant up to 200°C.

(3) Gasket in fluoroelastomer (VITON®) resistant up to 200°C.

Surface finish:

Turned.

Colour:

Natural.

Special requests:

Upon request and for special quantities writings can be supplied to customer's drawing.

Upon request and for special quantities thread d1 can be supplied to customer's drawing.

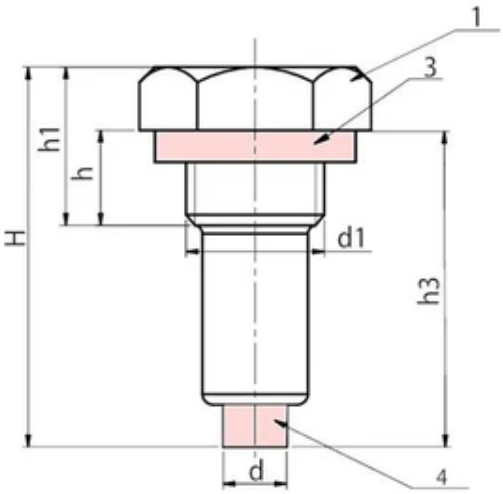

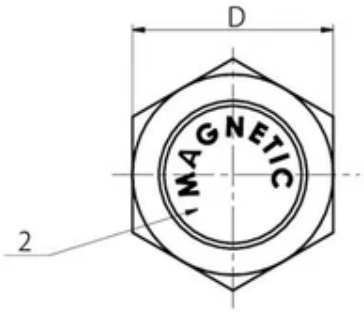

Version with GAS threads

Code	art.	D	d	H	h	h1	h3	d1 (GAS)	Weight (g)
T50119.0001	T50119.AT1-4	19	6	36	9	15	28	1/4	14
T50122.0001	T50122.AT3-8	22	8	36	9	15	30	3/8	21
T50126.0006	T50126.AT1-2	26	8	40	11	18	34	1/2	-
T50132.0001	T50132.AT3-4	32	8	44	12	20	36	3/4	-

Version with metric fine pitch

Code	art.	D	d	H	h	h1	h3	d1	Weight (g)
T50122.0006	T50122.AB16X1.5	22	8	36	9	15	30	M16X1,5	21
T50126.0005	T50126.AB20X1.5	26	8	40	11	18	34	M20X1,5	-
T50132.0006	T50132.AB27X1.5	32	8	44	12	20	36	M27X1,5	-

T556

CE | +60° -20° | PC | RoHS COMPLIANT

20

SAW SAFETY GUARD (FOR CIRCULAR SAW)

Accessori per macc. a legno

Materials:
(1-2) Polycarbonate.

Surface finish:
Satin.

Colour:
Orange (RAL 2004 code 02).

Inserts:
(3) Aluminium rivet AL4.010 4.0x10.
(4) Brass threaded through-hole insert.
(5) Galvanised steel washer.
(6) Turned galvanised steel pin with stop d.6x30.
(7) Brass self-tapping screw M3x10 DIN 97.

Clamping lever:
Indexed clamping lever art. A523065.TM08X3001.

Special requests:
Upon request and for special quantities the guard can be supplied in Yellow (RAL 1007) or in trasparent version.
Suction tube adapter D. 40 to be ordered separately - Art. T556040.T01.

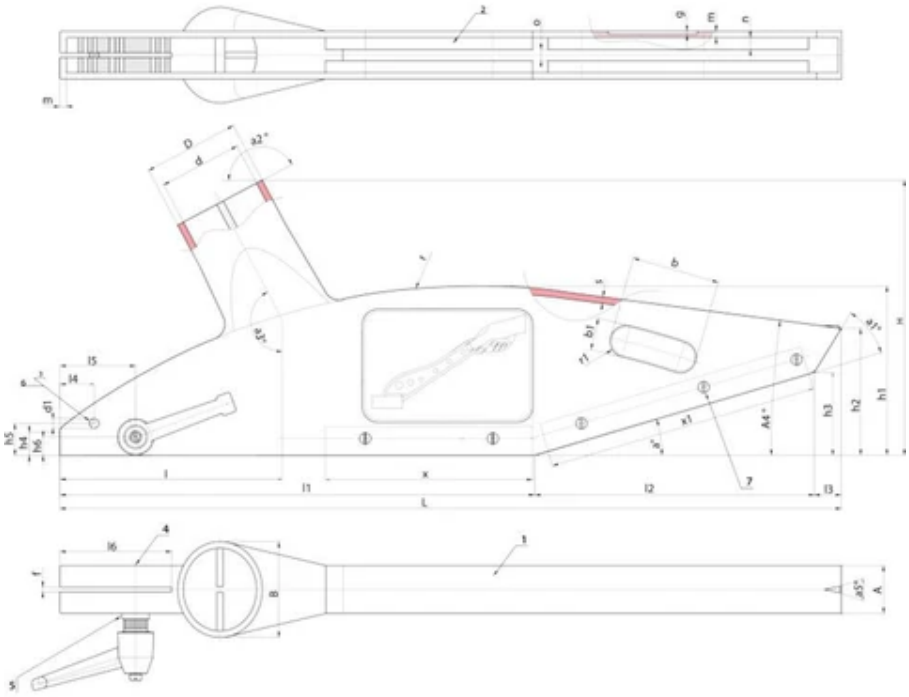

Code	Art.	L	A	B	H	D	d	d1	l	l1	l2	l3	l4	l5	l6	h1	h2
T556250.0001	T556250.C02	337	30	60	147	60	53	6.5	80	243	77	16.5	10	23.5	42	75	57.5
T556300.0001	T556300.C02	490	30	60	172	60	53	6	145	297	176	17	21.5	47.5	70	105	79.5

Code	Art.	h3	h4	h5	h6	a°	a1°	a2°	a3°	a5°	b	b1	f	g	m	n	o
T556250.0001	T556250.C02	28	23	20	10.5	20	40	152	152	-	44	20.5	4	450	5.5	7	7
T556300.0001	T556300.C02	52	14.5	20	11.5	16.5	41	152	152	22	56	21	3	650	4	7	8

Code	Art.	r	r1	s	x	x1	Weight (g)
T556250.0001	T556250.C02	290	10	4	-	190	450
T556300.0001	T556300.C02	430	10	4	130	170	650

T558

+60° -20° | PC | RoHS COMPLIANT

20

EXTENSION KIT FOR SCORING BLADE FOR T556300

Accessori per macc. a legno

Materials:
Polycarbonate.

Surface finish:
Satin.

Colour:
Transparent

Inserts:
(1A) Turned brass pivot pin with hexagon head.
(1B) Special turned brass fixing screw with hexagon head.
(2) Brass spacer washer D. 16x0.8 hole 10.3.

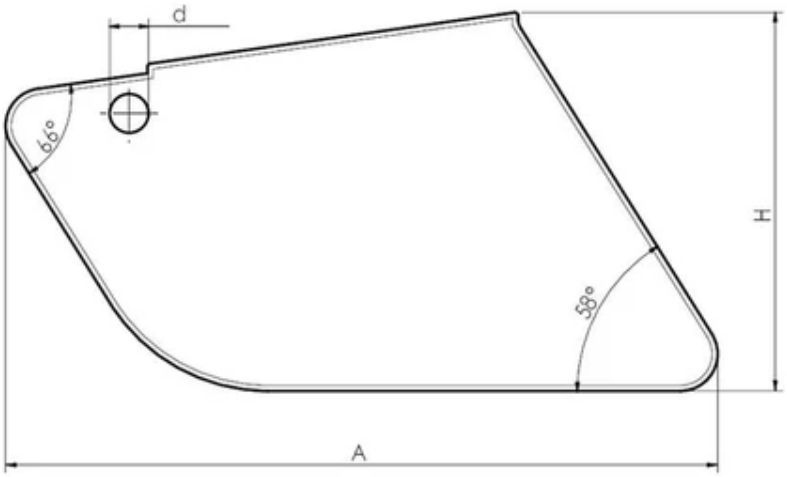

Code	art.	A	H	B	C	d	C	E	Weight (g)
T558300.0001	T558300.CCRI	192	102	38	32	10.5	32	13	122

T559

+60° -20° | PC | RoHS COMPLIANT

20

SAW SAFETY GUARD WITH EXTENSION FOR SCORING BLADE

Accessori per macc. a legno

Materials:
(1-2-9) Polycarbonate.

Surface finish:
Satin.

Colour:
Transparent.

Inserts:
(3) Aluminium rivet AL4.010 4.0x10.
(4) Brass threaded through-hole insert.
(5) Galvanised steel washer.
(6) Spring pin d.6x30 in black-oxide treated spring steel DIN 148.
(7) Brass self-tapping screw M03x10 DIN 97.
(8) Turned brass pin to rotate and fix the extension.
(9) Mobile safety extension for scoring blade.

Clamping lever:
Indexed clamping lever art. A523065.TM08X3001.

Special requests:
Black suction tube adapter D. 40 to be ordered separately - art. T556040.T01.

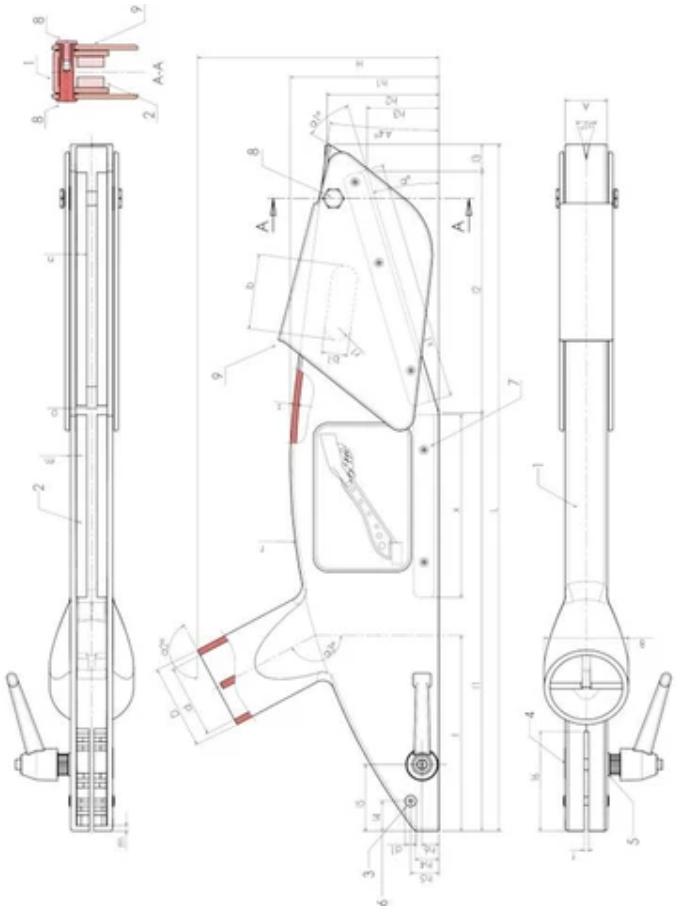

Code	Art.	L	A	B	H	D	d	d1	l	l1	l2	l3	l4	l5	l6	h1	h2
T559300.0001	T559300.CCRI	490	30	60	172	60	53	6	145	297	176	17	21.5	47.5	70	105	79.5

Code	Art.	h3	h4	h5	h6	a°	a1°	a2°	a3°	a4°	a5°	b	b1	f	m	n	o
T559300.0001	T559300.CCRI	52	14.5	20	11.5	16.5	41	152	152	7.5	22	56	21	3	4	7	8

Code	Art.	r	r1	s	x	x1	W	K	Weight (g)
T559300.0001	T559300.CCRI	430	10	4	130	170	192	13	650

T808

+135° -30° | PA6 +G.F. | RoHS COMPLIANT

20

DOOR CLOSING CAP

Accessori per macc. a legno

Materials:
Reinforced polyamide.
Resistant to oils and greases.

Surface finish:
Satin.

Colour:
Black (RAL 9011).

Hole:
Smooth through hole obtained by moulding the plastic.

Special requests:
Upon request and for special quantities available in the colours indicated in the chart.

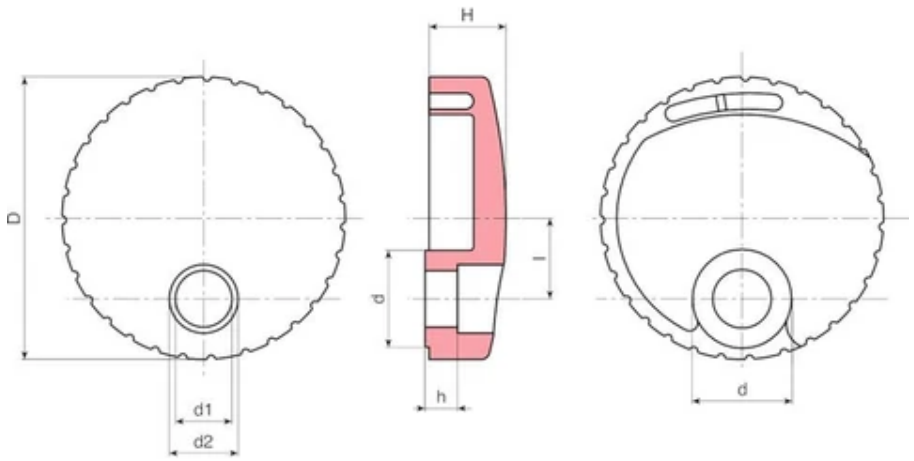

Code	Art.	D	H	l	h	d	d1	d	d2	Weight (g)
T808L.0001	T808L.T01	70	20	20	8	24	14.5	24	42	120

T815

+60° -20° LDPE RoHS COMPLIANT

20 CORNER PROTECTOR

Materials:
Polyethylene.

Surface finish:
Satin.

Colour:
Black (RAL 9011).

Special requests:
None.

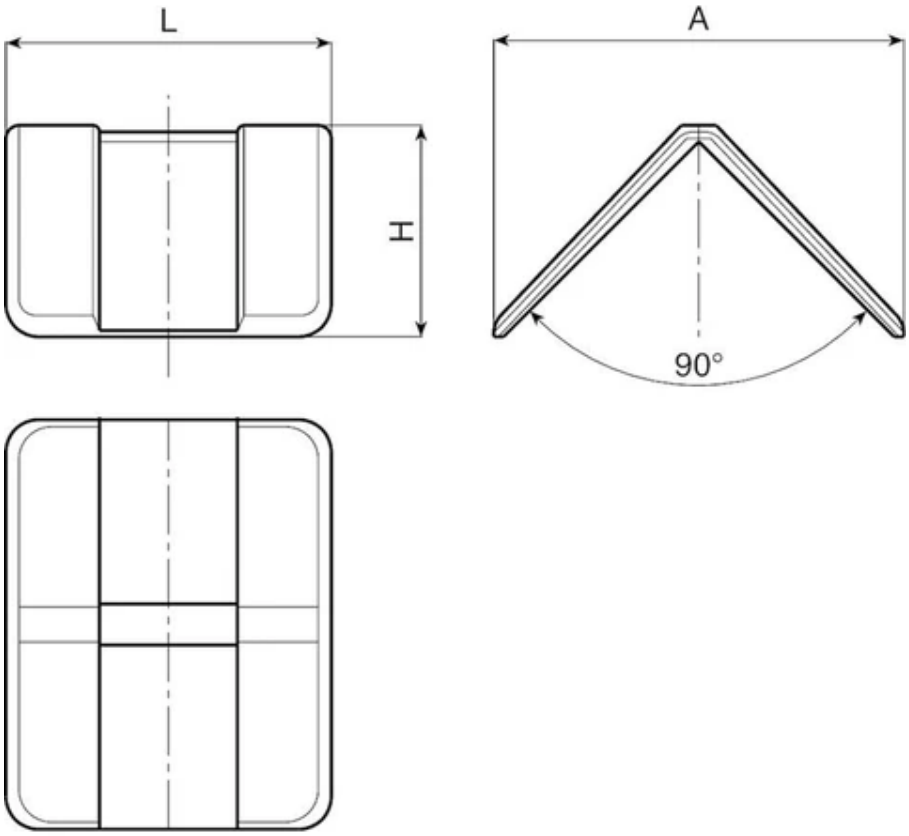

Code	art.	L	A	H	Weight (g)
T815.0001	T815.T01	60	49	32	10