S111

+170° -20° | PF | RoHS COMPLIANT

19

??? ??? ? ???

Quick couplings DINS

??:

?? ??

??? ???? ??.

??? ???.

?? ??:

??.

??:

?? (RAL 9011).

???:

(1) ? ???? ?? ?? ??? EN 60794:12.

(4) F25-00:

DIN 6798 ??? ?? ?? ?? ?? ?? ?? ??.

(4) F35-00:

DIN 137 ??? ?? ?? ?? ?? ?? ??.

(4) F70-95:

DIN 137 ??? ?? ?? ?? ?? ?? ??.

(5) ?? ??? ??? ?? ??? ??? ? ??.

(6) ???? ??? ?? ?? ?? UNI 1751.

(7) ?? ??? ??? ?? ??.

(8) ??? ??? ??? ?? ?? ?? DIN933/UNI 5739.

?? ?? ??:

??.

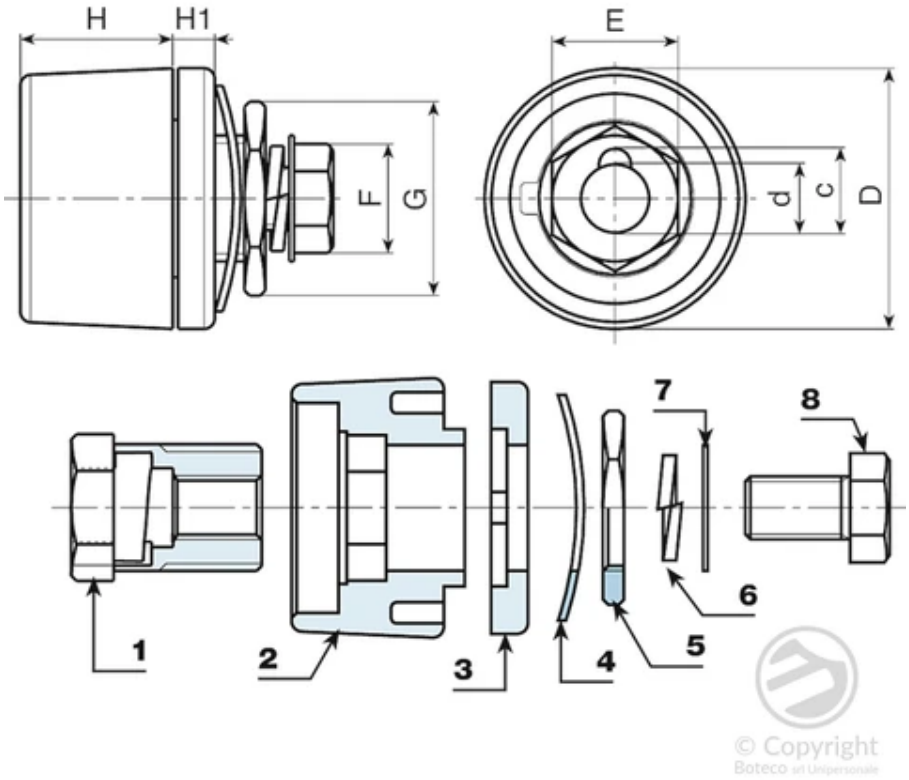

⍰⍰	art.	D	H	H1	d	c	E	F	G	⍰⍰(g)	Amp. Max
S111.0001	S111.F2500	33	14	4	9	11	14	13	22	50	200
S111.0008	S111.F3550	50.5	29	7	13	16	21	17	27	153	400
S111.0010	S111.F7095	50.5	29	7	13	16	24	19	32	202	500

S112

+80°
-20°

PP
+SBS

RoHS✓
COMPLIANT

19

□□ □□□ □□□

Quick couplings DINS

□□:

(4) □□□□□□ □SBS □□ □□, 75 □□.

□□□ □□□□ □□.

□□ □□:

□□□□.

□□:

□□ (RAL 9011).

□□□:

(1) □ □□□□ □□ □□ □□□ EN 60794:12.

(2) □□ □□ □□□ □□□.

(3) □□ □□ □□ □□ DIN 913-45H (M95-00 □□ 2 □□ □□□).

□□ □□ □□:

□□.

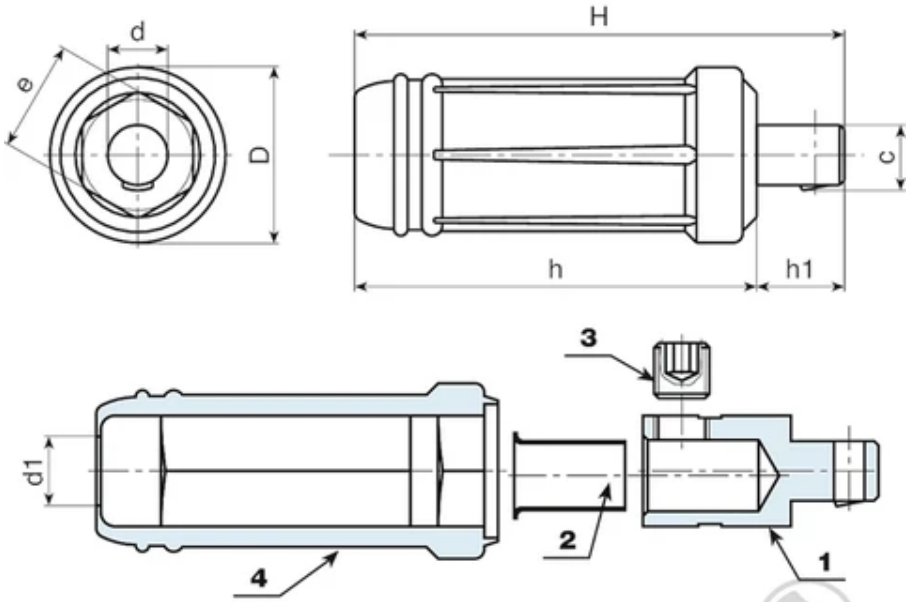

[illegible]	art.	D	H	h	h1	d	c	e	d1	[illegible](g)	Amp. Max
S112.0001	S112.M2500	24.5	70	59	11	9	10	14	8.5	37	200
S112.0003	S112.M3550	35	106	87	19	13	14.5	21	11	130	250
S112.0004	S112.M7000	38	106	87	19	13	14.5	24	15.5	148	400
S112.0006	S112.M9500	38	106	87	19	13	14.5	24	15.5	200	500

S113

+80° -20° | PP +SBS | RoHS COMPLIANT

19

□□□□ □□□

Quick couplings DINS

□□:

(4) □□□□□□ □SBS □□ □□, 75 □□.

□□□ □□□□ □□.

□□ □□:

□□□□.

□□:

□□ (RAL 9011).

□□□:

(1) □ □□□□ □□ □□ □□□ EN 60794:12.

(2) □□ □□ □□□ □□□.

(3) □□ □□ □□ □□ DIN 913-45H (F95-00 □□ 2 □□ □□□).

□□ □□ □□:

□□.

© Copyright Boteco

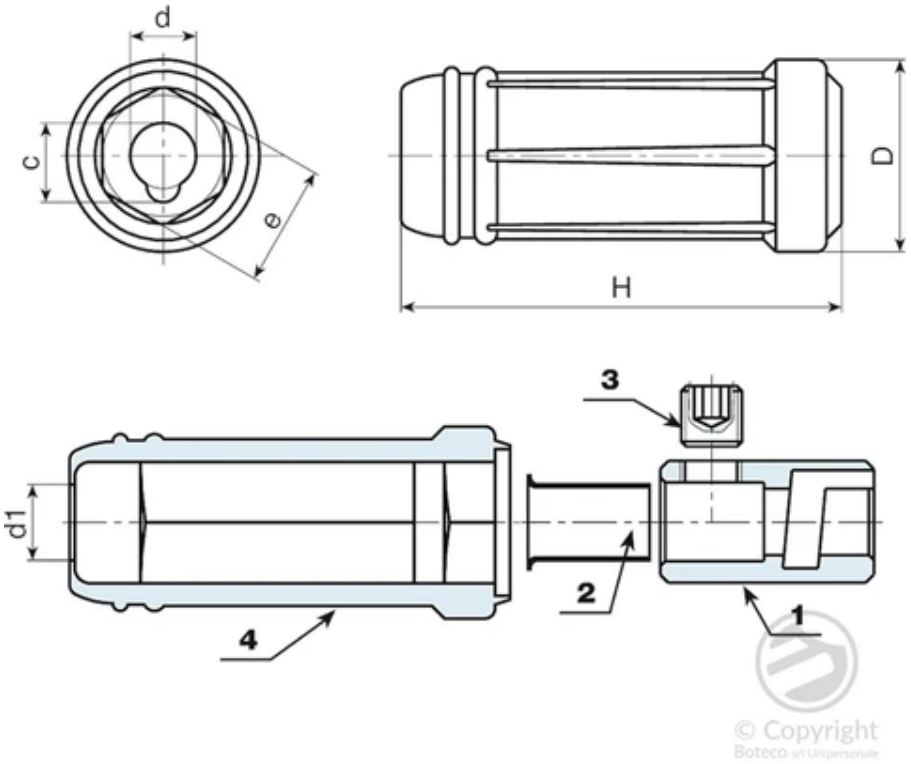

⍰⍰	art.	D	H	d	c	e	d1	⍰⍰(g)	Amp. Max
S113.0001	S113.F2500	24.5	59	9	10.5	14	8.5	38	200
S113.0002	S113.F3550	35	87	13	16	21	11	104	250
S113.0003	S113.F7000	38	87	13	16.5	24	15.5	151	400
S113.0004	S113.F9500	38	87	13	16	24	15.5	188	500

S114

+170°
-20°

PF

RoHS✓ COMPLIANT

19

??? ?? ???

Quick couplings DINS

??:

?? ??

??? ???? ??.

??? ???.

?? ??:

??.

??:

?? (RAL 9011).

© Copyright
Boteco srl Unipersonale

???:

(1) ? ??? UNI? ?? ?? ???.

(4) F25-00:

DIN 6798 ??? ?? ?? ?? ?? ?? ??.

(4) F35-00:

DIN 137 ??? ?? ?? ?? ?? ?? ??.

(4) F70-95:

DIN 137 ??? ?? ?? ?? ?? ?? ??.

(5) ?? ??? ??? ?? ??? ??? ? ??.

(6) ???? ??? ?? ?? ?? UNI 1751.

(7) ?? ??? ??? ?? ??.

(8) ??? ??? ??? ?? ?? ?? DIN933/UNI 5739.

© Copyright
Boteco srl Unipersonale

?? ?? ??:

??.

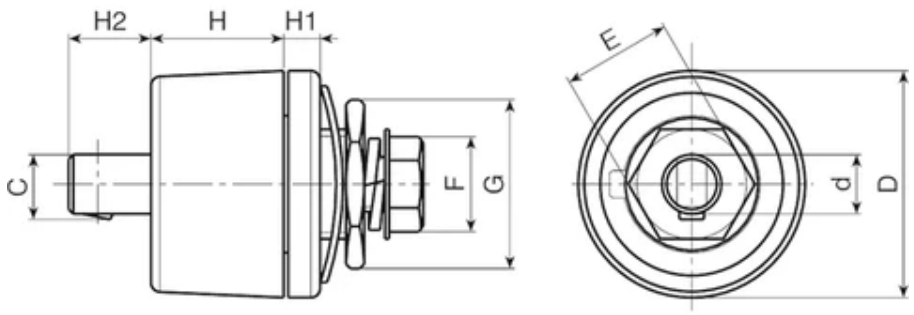

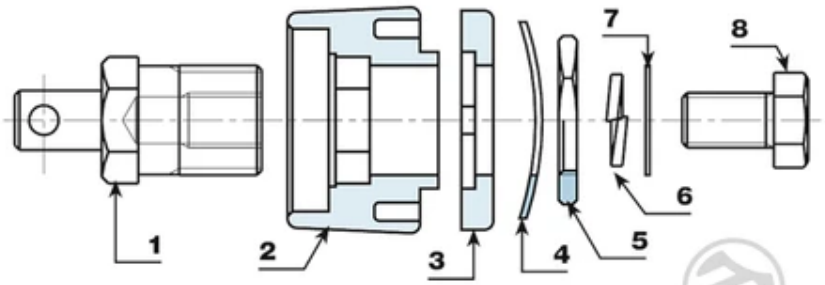

© Copyright
Boteco srl Unipersonale

⍰⍰	art.	D	H	H1	H2	d	c	E	F	G	⍰⍰(g)	Amp. Max
S114.0001	S114.M2500	33	14	4	7	9	9.5	14	13	22	60	200
S114.0002	S114.M3550	50.5	29	7	9	13	14	21	17	27	194	400
S114.0003	S114.M7000	50.5	29	7	9	13	14	24	19	32	242	500

S117

+135°
-30°

PA6
+G.F.

RoHS✓
COMPLIANT

19 □□TP□□□□(□□□□)

Quick couplings DINS

□□:

(2-3) □□□□□□(polyamide).

□□□□□□□□.

□□□□:

□□□□(□□□□□□□□).

□□:

□□ (RAL 9011).

□□□:

(1) □□□□UNI□□□□□□.

(4) □□□□□□□□□□□□DIN 137.

(5) □□□□□□□□□□□□□□□□.

(6) □□□□□□□□□□□□UNI 1751.

(7) □□□□□□□□□□.

(8) □□□□□□□□□□□□DIN933/UNI 5739.

□□□□□:

□□.

© Copyright
Boteco srl Unipersonale

© Copyright
Boteco srl Unipersonale

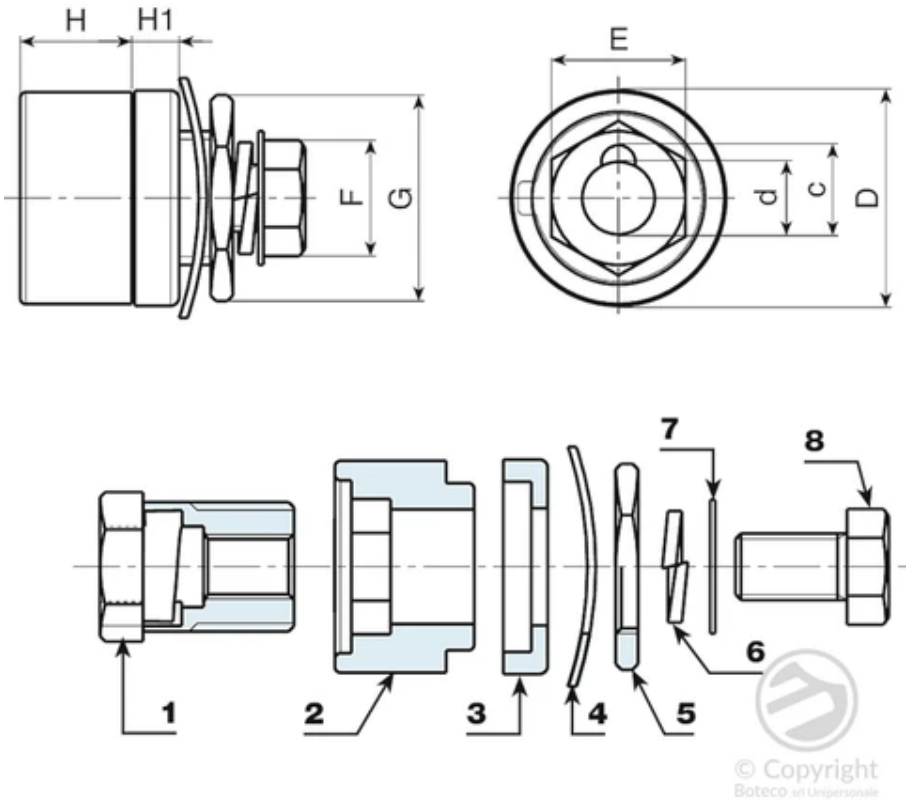

⍰⍰	art.	D	H	H1	d	c	E	F	G	⍰⍰(g)	Amp. Max
S117.0001	S117.F3550	38	20	8	13	16	21	17	27	121	200

S118

+135°
-30°

PA6
+G.F.

RoHS✓
COMPLIANT

19 ??TP?????(????)

Quick couplings DINS

??:

(2-3) ?? ?????(polyamide).

??? ???? ??.

?? ??:

???? (??? ?? ????).

??:

?? (RAL 9011).

???:

(1) ?????UNI?????.

(4) ????????????DIN 137.

(5) ?????????????????.

(6) ????????????UNI 1751.

(7) ?????????.

(8) ?????????????DIN933/UNI 5739.

?? ?? ??:

??.

© Copyright
Boteco srl Unipersonale

© Copyright
Boteco srl Unipersonale

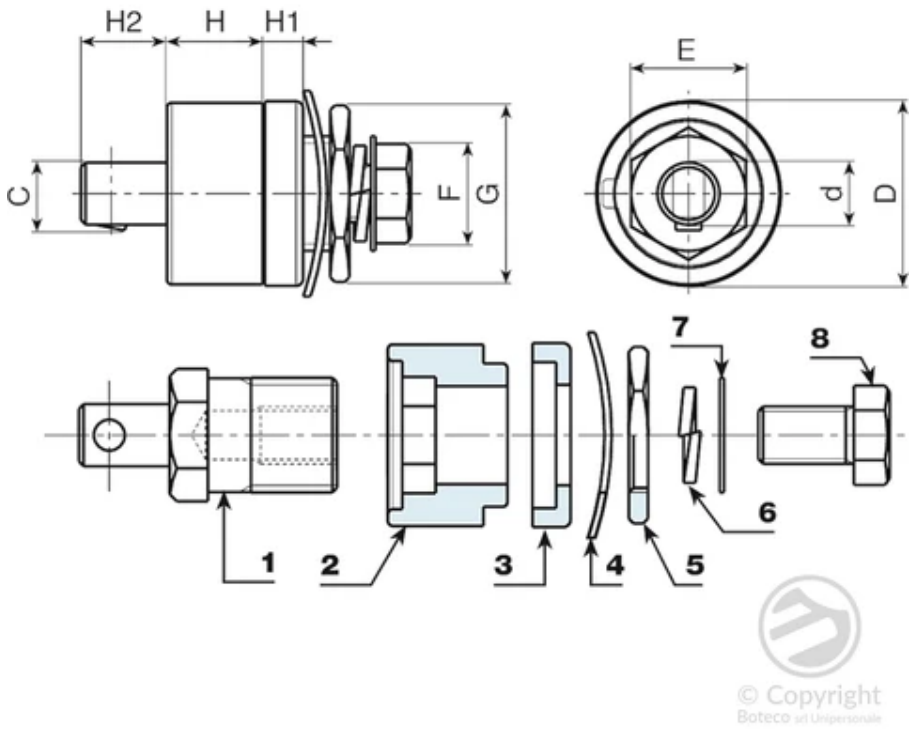

⍰⍰	art.	D	H	H1	H2	d	c	E	F	G	⍰⍰(g)	Amp. Max
S118.0001	S118.M3550	38	20	8	17	13	14	21	17	27	160	200

S228

+135° -30° | PA6 +G.F. | RoHS COMPLIANT

19 ??????

Insulating washers

??:

??????

????????

????:

????

??:

?? (RAL 9011).

?:

????????????????

????:

??

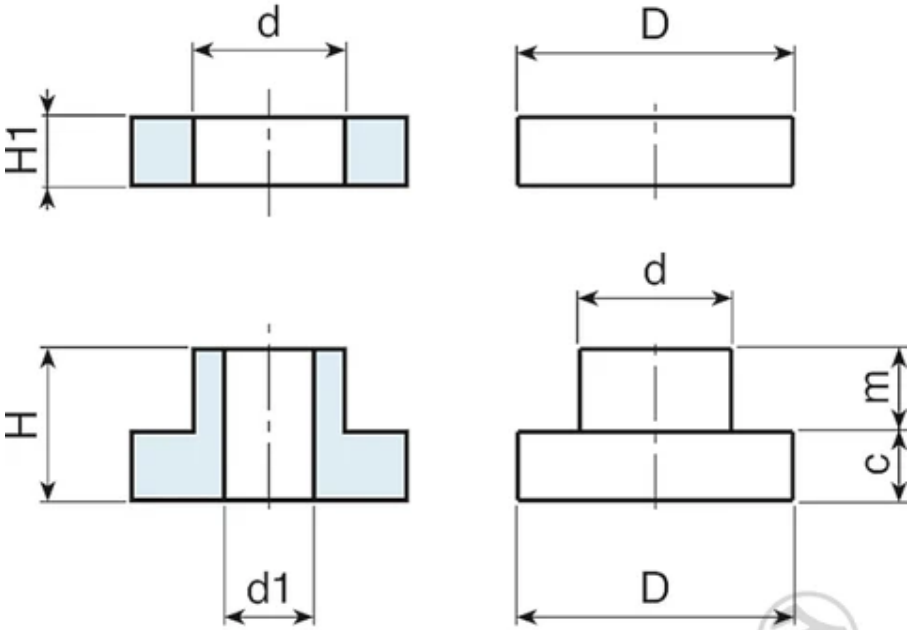

??	art.	D	H	d	H1	m	c	d1	??(g)
S22820C.0001	S22820C.TG06	20	11	11	5	6.5	4.5	6.5	9

S229

+135°
-30°

PA6
+G.F.

RoHS✓
COMPLIANT

19 ??????

Insulating washers

??:

??????

????????

????:

????

??:

?? (RAL 9011).

?:

????????????????

??????:

??

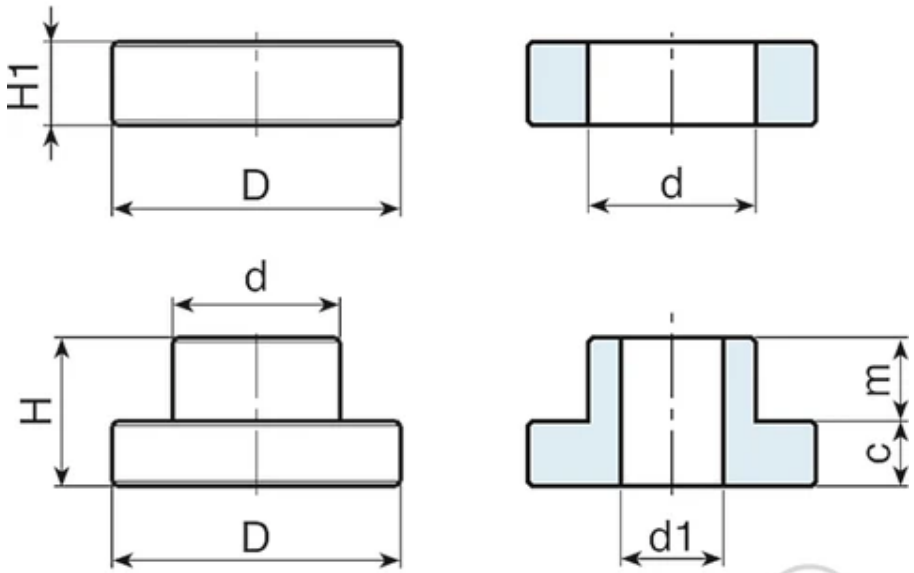

© Copyright
Boteco srl Unipersonale

??	art.	D	H	d	H1	m	c	d1	??(g)
S22931C.0001	S22931C.TG10	31	16	17,5	8.5	9	7	10.5	13

S599

+135°
-30°

PA6
+G.F.

RoHS✓
COMPLIANT

19

?? ??? ???

Various accessories for welding machines

??:

?? ?????.

??? ???? ??.

?? ??:

???? (??? ?? ????).

??:

?? (RAL 9011).

?:

???? ???? ??? ???? ?? ??.

?? ?? ??:

??.

??	art.	D	H	d	d1	d2	d3	d4	A	b	c	f	G	I	L	M	N
S59928.0001	S59928.T01	28	25	18	11.5	6	3	2	14	10	2	8.5	20	3	12	15	5

??	art.	Q	??(g)
S59928.0001	S59928.T01	13	65

S600

+135° -30° | PA6 +G.F. | RoHS COMPLIANT

19 ???? ? ???? ?? ???? ????

Various accessories for welding machines

??:

?? ?????.

???? ????? ??.

?? ??:

????? (???? ?? ?????).

??:

?? (RAL 9011).

?:

????? ????? ???? ????? ?? ??.

?? ?? ??:

??.

??	art.	B	C	D	E	F	G	L	H1	H2	h4	h5	h6	d1	d2	d3	d4
S60038.0001	S60038.TG1001	M14	17.5	26	23	14.5	19	34.5	20	22	7	16.5	19	10.5	19	14	17
S60038.0002	S60038.TG1101	M14	17.5	26	23	14.5	19	34.5	20	22	7	16.5	19	11.5	19	14	17
S60038.0003	S60038.TG1401	M14	17.5	26	23	14.5	19	34.5	20	22	7	16.5	19	14.5	19	14	17

??	art.	Lt	??(g)
S60038.0001	S60038.TG1001	43	13
S60038.0002	S60038.TG1101	43	13
S60038.0003	S60038.TG1401	43	13

S601

+80° -20° | PP +TPV | RoHS COMPLIANT

19 ??? (???? ????)

Various accessories for welding machines

??:

??????? TPV ?? ??, ?? ?? 75.

??? ???? ??.

?? ??:

????.

??:

?? (RAL 9011).

?:

???? ???? ??? ???? ?? ??.

?? ?? ??:

??.

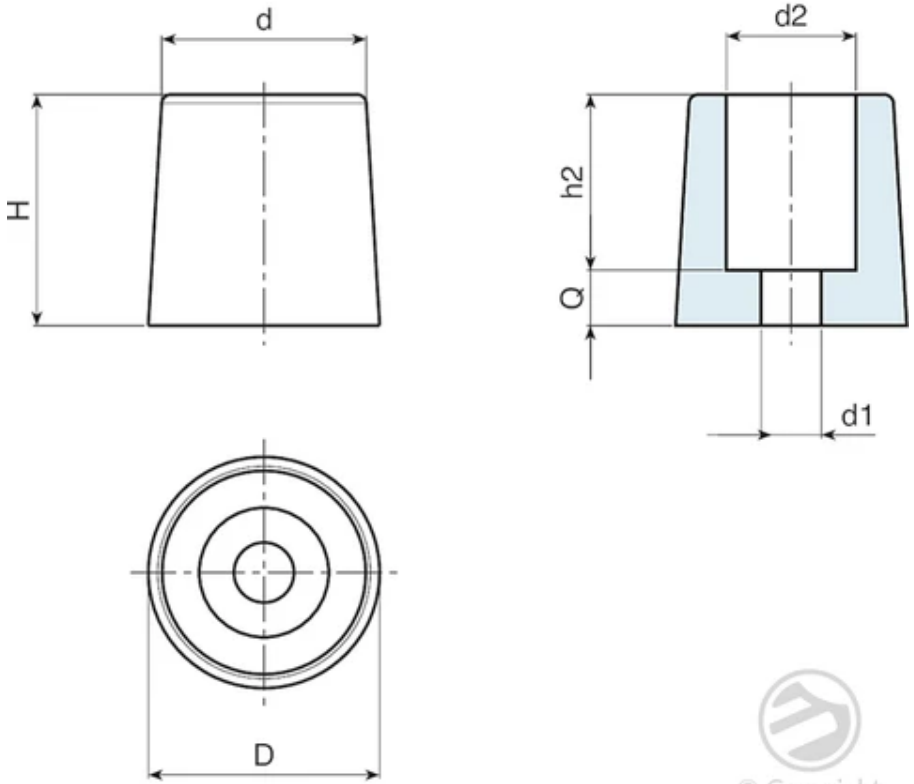

© Copyright Boteco srl Unipersonale

??	art.	D	H	d	d2	h2	Q	d1	??(g)
S60122.0001	S60122.E01	23,5	18	21,5	11	8,5	9.5	4	13
S60125.0001	S60125.D01	25	25	22	14	19	6.5	6.5	17

S602TG10

+135°
-30°

PA6
+G.F.

RoHS✓
COMPLIANT

19 MIG/MAG □□ □□□ □□□ □□□ □□ □□ □□

MIG reels accessories

□□:

(1-3-4-6) □□ □□□□□ (polyamide).

□□□ □□□□ □□.

□□ □□:

□□□□ (□□□ □□ □□□□).

□□:

□□ (RAL 9011).

□□□:

(2) □□ □□ □□ □□□.

(5) □□ □□□ □□ □□ □□ □□ □□□.

(7) □□□□ TPV □□ □□, 75 Shore.

(8) □□ □□ □□ □□.

(9) □□ □□□ □□ □□ □□, □/□ □□□. □□□ □□□□ □□ □□ □□□ □□ □□□□ □□□.

□□ □□ □□:

□□ □□ S602116□ □□□□ □□ □ □ Q=55□ □□□ □□□ □□□□□ □□ □□, □□ □ □□□□ □□□ S604□ □□□ □□□□. □□□ □□□□ □□□.

□□ □, □□ □□□□ □□ □□ □□□ □□□ S816□ □□□ □□ □ □□□□. □□□ □□□□□ □□□.

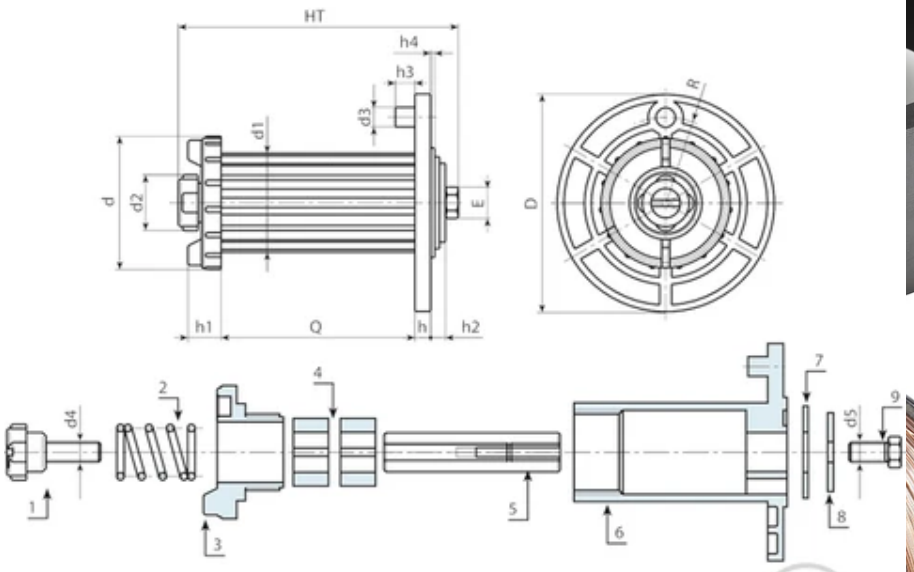

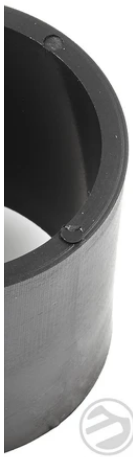

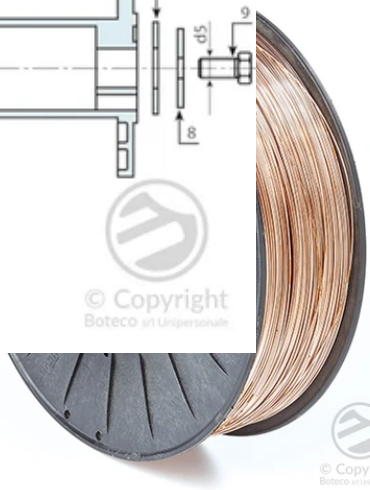

© Copyright
Boteco srl Unipersonale

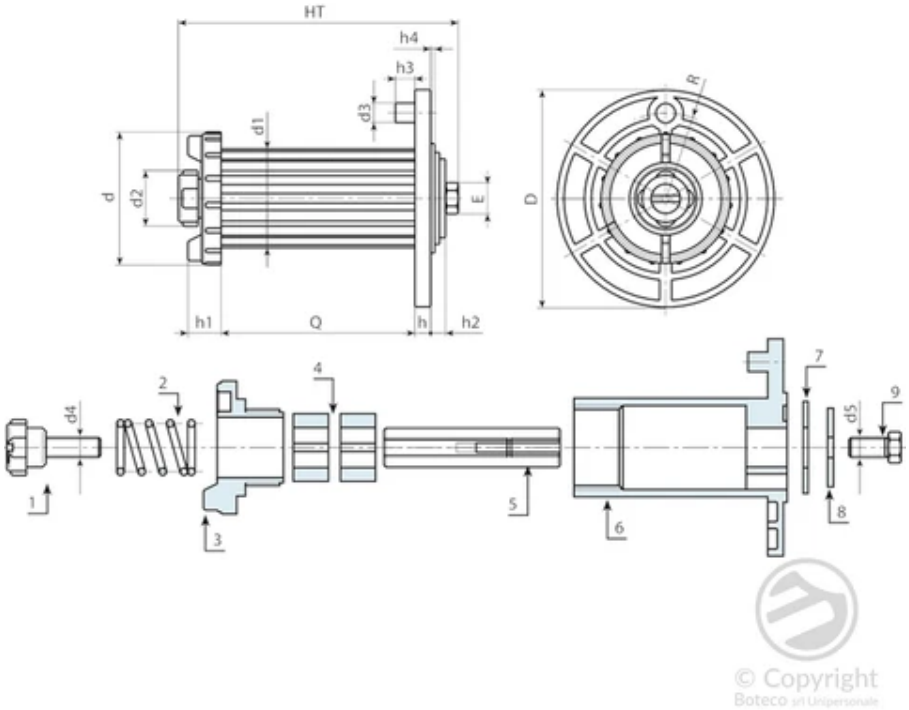

□□□□□□□□□□□□□□□: □□53mm - □55mm (1/2)

□□	art.	D	HT	d	d1	d2	d3	d4	d5	h	h1	h2	h3	h4	E	Q	R
S602074.0001	S602074.TG10X1001DX	112	102	68	50.5	28	10	M10 DX	M10 DX	9	17	8	7	1.7	13	55	44
S602074.0002	S602074.TG10X1001SX	112	102	68	50.5	28	10	M10 DX	M10 SX	9	17	8	7	1.7	13	55	44

□□	art.	□□(g)
S602074.0001	S602074.TG10X1001DX	350
S602074.0002	S602074.TG10X1001SX	350

□□□ □□ □□□□ □□□ □□: □□53mm - □100mm (1/2)

□□	art.	D	HT	d	d1	d2	d3	d4	d5	h	h1	h2	h3	h4	E	Q	R
S602116.0001	S602116.TG10X1001DX	112	140	68	50.5	28	10	M10 DX	M10 DX	9	17	8	7	1.7	17	99	44
S602116.0002	S602116.TG10X1001SX	112	140	68	50.5	28	10	M10 DX	M10 SX	9	17	8	7	1.7	17	99	44

□□	art.	□□(g)
S602116.0001	S602116.TG10X1001DX	545
S602116.0002	S602116.TG10X1001SX	545

S602TG50

+135° -30° | PA6 +G.F. | RoHS COMPLIANT

19 MIG/MAG □□ □□□ □□□ □□□□ □□ □□ □□

MIG reels accessories

□□:

(1-3-4-6) □□ □□□□□ (polyamide).

□□□ □□□□ □□.

□□ □□:

□□□□ (□□□ □□ □□□□).

□□:

□□ (RAL 9011).

□□□:

(2) □□ □□ □□ □□□.

(5) □□ □□□ □□ □□ □□ □□ □□□.

(7) □□□□ TPV □□ □□, 75 Shore.

(8) □□ □□ □□ □□.

(9) □□ □□□ □□ □□ □□, □/□ □□□. □□□ □□□□ □□ □□ □□□ □□ □□□□ □□□.

(10) □□ □□ □□ □□□□ □□□.

□□ □□ □□:

□□ □, □□ □□□□ □□ □□ □□□ □□□S816□ □□□ □□ □ □□□□. □□□ □□□□□ □□□.

© Copyright
Boteco

© Copyright
Boteco

200/42
© Copyright
Boteco

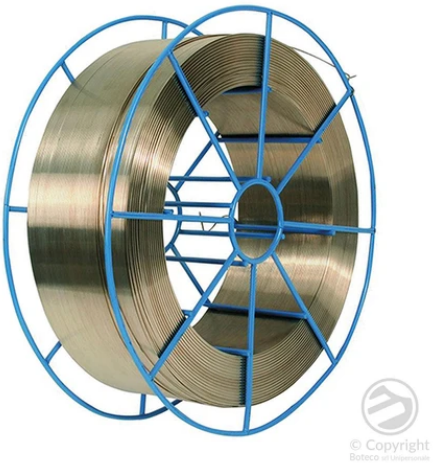
© Copyright
Boteco

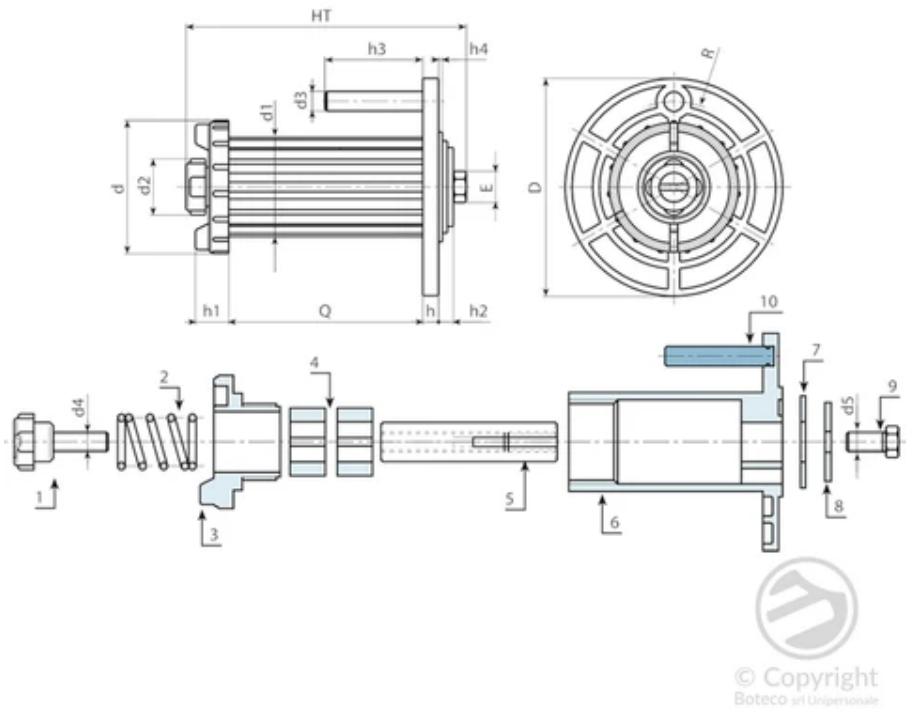

⍰⍰	art.	D	HT	d	d1	d2	d3	d4	d5	h	h1	h2	h3	h4	E	Q	R
S602116.0015	S602116.TG10X5001DX	112	140	68	50.5	28	10	M10 DX	M10 DX	8	17	8	50	1.7	17	99	44
S602116.0016	S602116.TG10X5001SX	112	140	68	50.5	28	10	M10 DX	M10 SX	8	17	8	50	1.7	17	99	44

⍰⍰	art.	⍰⍰(g)
S602116.0015	S602116.TG10X5001DX	550
S602116.0016	S602116.TG10X5001SX	550

S603

+135°
-30°

PA6
+G.F.

RoHS✓
COMPLIANT

19

?? ???? ??? ?? ??

MIG reels accessories

??:

(1-2) ?? ????? (polyamide).

??? ???? ??.

?? ??:

???? (??? ?? ????).

??:

?? (RAL 9011).

???:

(3-8) ?? ??? ??? ??.

(4) ?? ?? ?? ??.

(5-7) ??????? ?? ??? ??.

(6) ?? ?? ?? ??? ???? ?????.

?? ?? ??:

??.

??:

?? ??S603? ?? ??? ???d. 53mm?? ??? 100mm? ???? ?? ?? ???? ??? ?
????.

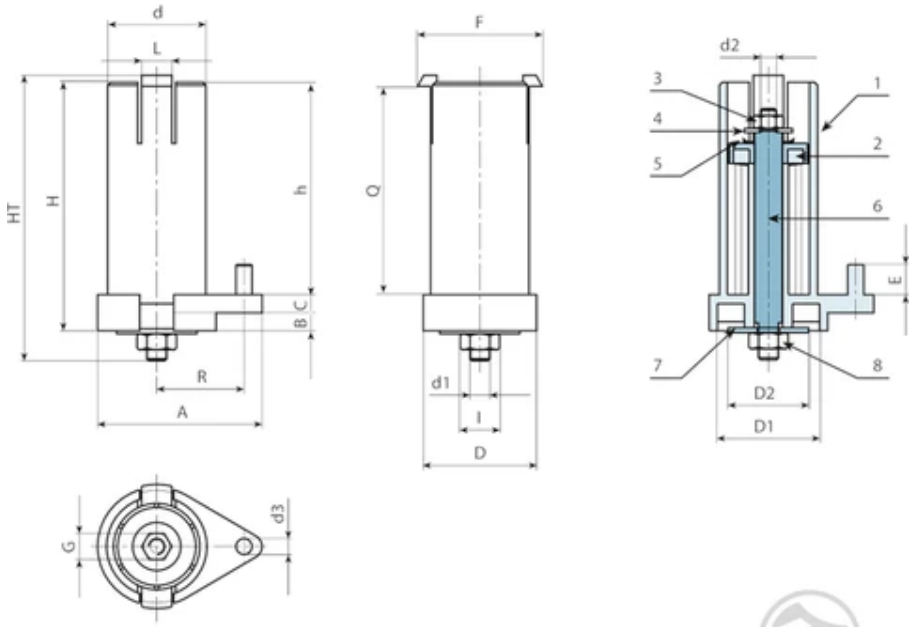

© Copyright
Boteco srl Unipersonale

⍰⍰	art.	D	D1	D2	HT	H	d	d1	d2	d3	h	A	B	C	E	F	G
S603118.0001	S603118.T01	60	51	40	137	118	50	M10 SX	M8 SX	8	107	82	3	9	15	63	13
S603124.0001	S603124.T01	60	51	40	145	124	50	M10 SX	M8 SX	8	107	82	9	9	15	63	13

⍰⍰	art.	I	L	Q	R	⍰⍰(g)
S603118.0001	S603118.T01	17	15	104	43.5	295
S603124.0001	S603124.T01	17	15	104	43.5	315

S802

+135° -30° | PA6 +G.F. | RoHS COMPLIANT

19 □□□ □□ □□□ □□□ □□□ (□□ MIG/MAG □□□□)

MIG reels accessories

□□:

□□ □□□□□.

□□□ □□□□ □□.

□□ □□:

□□□□ (□□□ □□ □□□□).

□□:

□□ (RAL 9011).

□:

□□□□ □□□□ □□□ □□□□ □□ □□.

□□ □□ □□:

□ □□□□ □□□ □□□ □ □□□, □□ □□□ □□□ □□□□.

>□□ □□□:	S804.T01
>□□ □□□ H=65:	S800060.T01
>□□ □□□ H=95:	S800086.T01
>□□ □□□ H=125:	S800125.T01

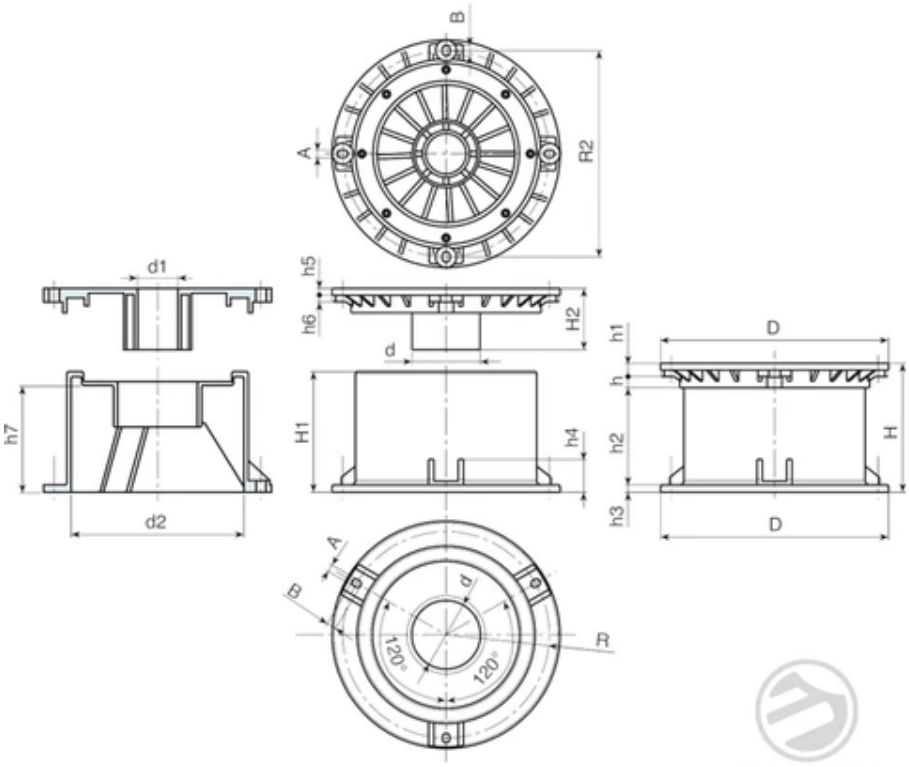

© Copyright Boteco srl Unipersonale

??	art.	D	H	H1	H2	d	d1	d2	h	h1	h2	h3	h4	h5	h6	h7	R
S802065.0001	S802065.T01	215	65	56	58	64	35	-	13	10	36	6.5	31	7	6	-	195
S802095.0001	S802095.T01	215	86	86	58	64	38	-	13	10	56	6.5	31	7	6	-	195
S802125.0001	S802125.T01	215	123	114	58	64	38	-	13	10	93	6.5	31	7	6	-	195

??	art.	R1	A	B	??(g)
S802065.0001	S802065.T01	195	7	9	1000
S802095.0001	S802095.T01	195	7	9	1115
S802125.0001	S802125.T01	195	7	9	1215

S816

+135°
-30°

PA6
+G.F.

RoHS✓
COMPLIANT

19 MIG/MAG □□□□ □□ □□□□ □□ □□ □□□ □□□

MIG reels accessories

□□:

□□ □□□□□.

□□□ □□□□ □□.

□□ □□:

□□□□ (□□□ □□ □□□□).

□□:

□□ (RAL 9011).

□:

□□□□ □□□□ □□□ □□□□ □□ □□.

□□□:

□□ □□ □□ □□□ □□ □□ □□ □□□.

□□ □□ □□:

□□.

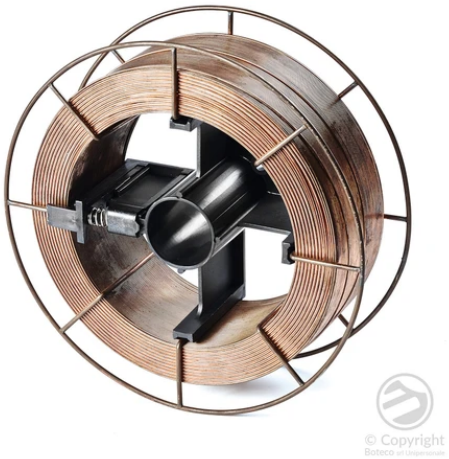
© Copyright
Boteco art Unipersonale

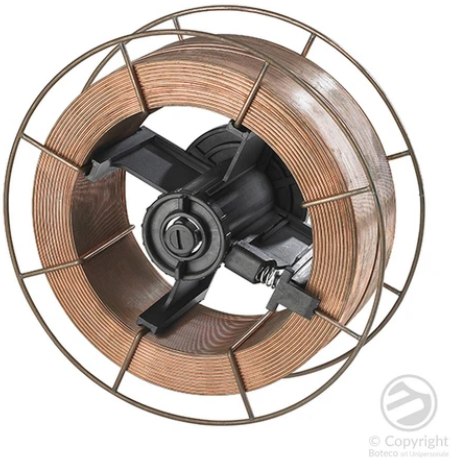
© Copyright
Boteco art Unipersonale

© Copyright
Boteco art Unipersonale

© Copyright
Boteco art Unipersonale

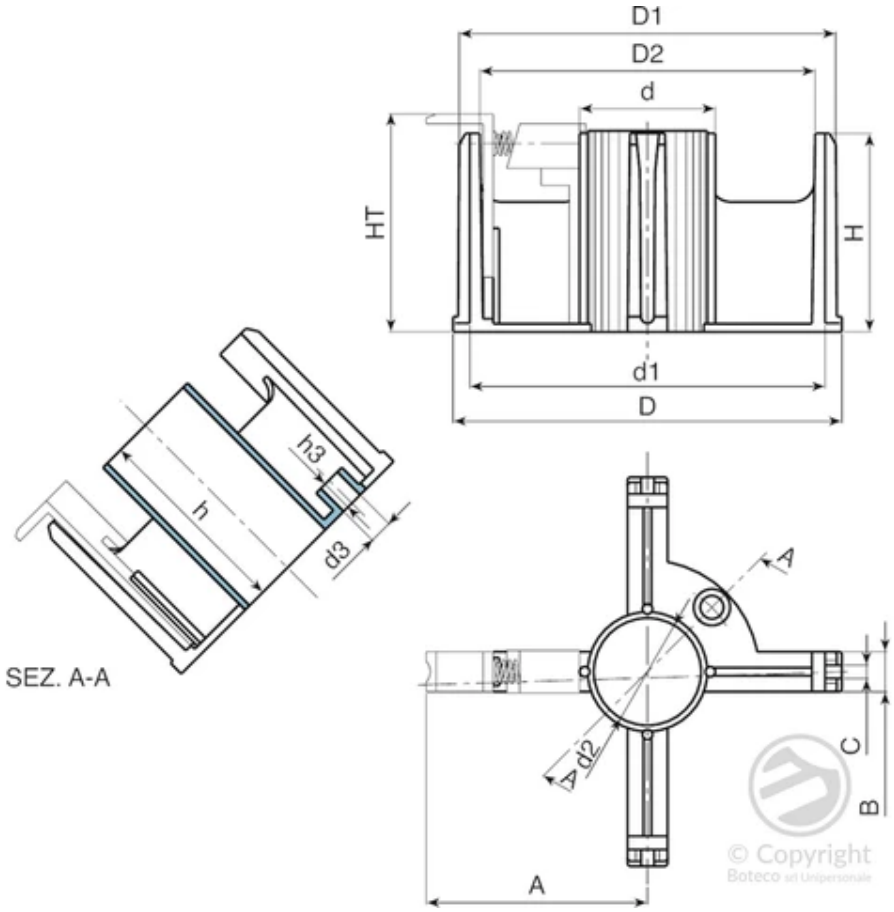

[illegible]	art.	D	HT	D1	D2	d	d1	d2	d3	H	h	h3	A	B	C	[illegible](g)
S816.0001	S816.T01	192	108	187	166	67	175.5	53	11.5	98	99	16	110	17.5	6.5	290

S860

+135° -30° | PA6 +G.F. | RoHS COMPLIANT

19 ???? ???? ?? ??

Various accessories for welding machines

??:

?? ?????.

???? ????? ??.

?? ??:

????? (???? ?? ?????).

??:

?? (RAL 9011).

?:

????? ????? ???? ????? ?? ??.

?? ?? ??:

??.

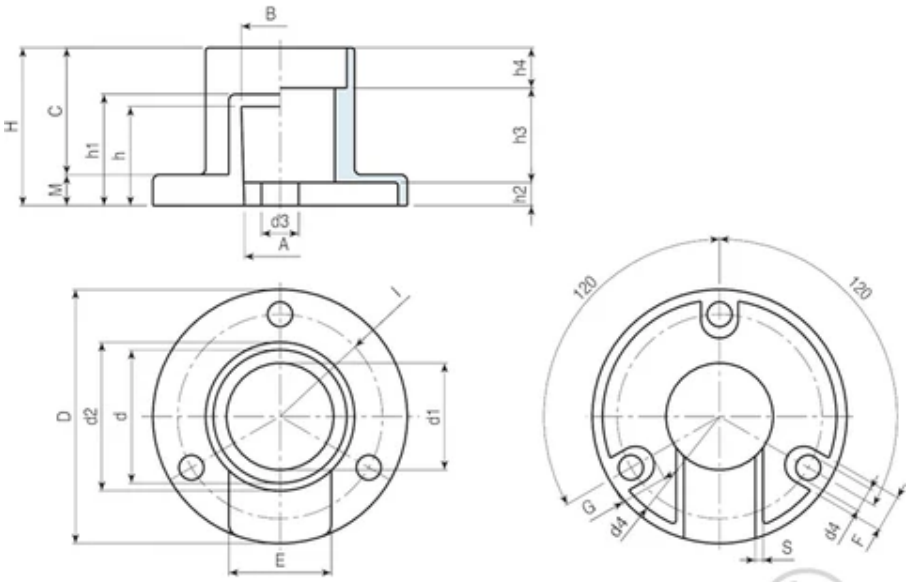

© Copyright
Boteco srl Unipersonale

??	art.	D	H	A	B	C	E	F	G	I	M	S	h	h1	h2	h3	h4
S860.0001	S860.T01	82	51	23	25	41	34.5	12	15.5	33	10	2.5	32	36	7.5	30.5	13

??	art.	d	d1	d2	d3	d4	??(g)
S860.0001	S860.T01	43	34.5	50	12	8	65