R100

max 4 Km/h | +80° -25° | PA6 | RoHS COMPLIANT

18 POLYAMIDE MONOLITHIC WHEEL (WITHOUT RIG)

Ruote in Nylon monolitico



Materials:

Wheel body:

Polyamide. Resistant to oils and greases.

Tread:

Polyamide. Resistant to oils and greases.

Surface finish:

Smooth.

Colour:

Natural white.

Wheel rotation:

The hole for the pivot pin is formed by plastic moulding.

Special requests:

Upon request and for a minimum of 20 pieces, the wheel can be supplied with a needle roller cage, (replace code no. R100 with code no. R130).

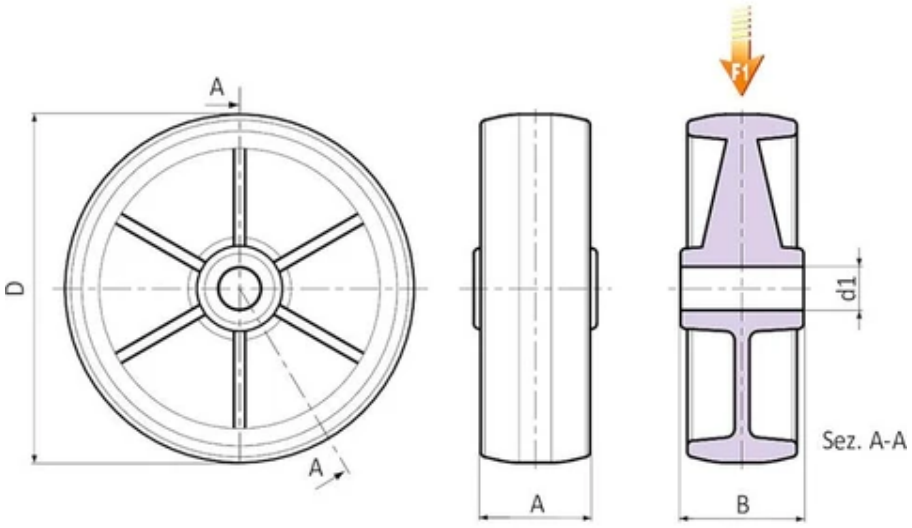

Code	art.	D	A	B	d1	Weight (g)	F1 (Kg)
R100080.0001	R100080.T30D12	80	30	39	12	60	100
R100100.0001	R100100.T30D12	100	30	39	12	96	130
R100125.0001	R100125.T39D15	125	39	44	15	206	200
R100150.0001	R100150.T40D20	150	40	45	20	300	250
R100175.0001	R100175.T45D20	175	45	58	20	488	300
R100200.0001	R100200.T50D20	200	50	58	20	576	380

R101

max 4 Km/h | +80° -25° | PA6 | RoHS COMPLIANT

18 POLYAMIDE MONOLITHIC WHEEL WITH ROUND STEEL SWIVEL SUPPORT AND SMOOTH THROUGH HOLE

Ruote in Nylon monolitico



Materials:

Wheel body (1):

Polyamide. Resistant to oils and greases.

Tread (2):

Polyamide. Resistant to oils and greases.

Surface finish:

Smooth.

Colour:

(1-2) Natural white.

(3-4-5-6) Galvanised blue.

Wheel rotation (4):

The hole for the pivot pin is formed by plastic moulding. A galvanised steel tube is positioned between the stud and the hole for protection.

Bracket (3):

Steel fork (DD13).

Rotating assembly (5):

Steel rotating assembly with double ball race and smooth fixing hole, (hole tolerance H7).

Wheel fastening (6):

Steel hex head screw, coupled with a steel nut.

Special requests:

Upon request and for a minimum of 20 pieces, the wheel can be supplied with a needle roller cage, (replace code no. R101 with code no. R131).

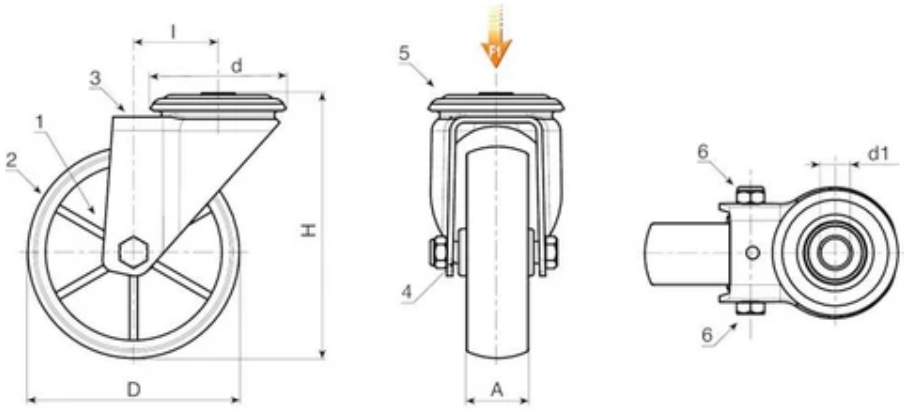

Code	art.	D	A	H	l	d	d1 H7	Weight (g)	F1 (Kg)
R101080.0001	R101080.T30D12	80	30	108	32	64	12	360	100
R101100.0001	R101100.T30D12	100	30	127	32	64	12	400	130
R101125.0001	R101125.T39D12	125	39	155	32	64	12	726	130
R101150.0001	R101150.T40D12	150	40	184	35	65	12	-	140
R101175.0001	R101175.T45D16	175	45	228	48	95	16	-	270
R101200.0001	R101200.T50D16	200	50	240	48	95	16	1970	270

R101CIN

INOX | max 4 Km/h | +80° -25° | PA6 | RoHS COMPLIANT

18 POLYAMIDE MONOLITHIC WHEEL WITH ROUND STAINLESS STEEL SWIVEL SUPPORT AND SMOOTH THROUGH HOLE

Ruote in Nylon monolitico



Materials:

Wheel body (1):

Polyamide. Resistant to oils and greases.

Tread (2):

Polyamide. Resistant to oils and greases.

Surface finish:

Smooth.

Colour:

(1-2) Natural white.

(3-4-5-6) Natural stainless steel.

Wheel rotation (4):

The hole for the pivot pin is formed by plastic moulding. A stainless steel (Aisi 304) tube is positioned between the stud and the hole for protection.

Bracket (3):

Stainless steel (Aisi 304) fork.

Rotating assembly (5):

Stainless steel (Aisi 304) rotating assembly with double stainless steel (Aisi 420) ball race and smooth fixing hole, (hole tolerance H7).

Wheel fastening (6):

Stainless steel (Aisi 304) hex head bolt, coupled with a stainless steel (Aisi 304) nut.

Special requests:

Upon request and for a minimum of 20 pieces, the wheel can be supplied with a needle roller cage, (replace code no. R101CIN with code no. R131CIN).

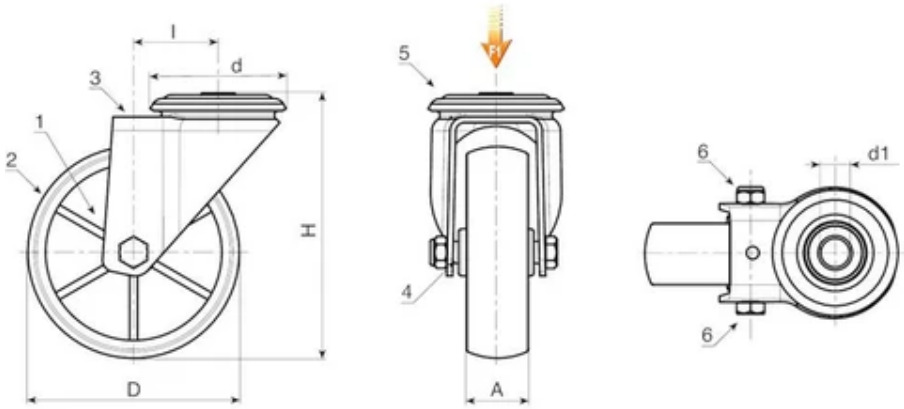

Code	art.	D	A	H	l	d	d1 H7	Weight (g)	F1 (Kg)
R101080.0002	R101080.T30D12CIN	80	30	108	32	64	12	340	100
R101100.0002	R101100.T30D12CIN	100	30	127	32	64	12	522	130
R101125.0002	R101125.T39D12CIN	125	39	155	32	64	12	513	130
R101150.0002	R101150.T40D12CIN	150	40	184	35	65	12	-	140
R101175.0002	R101175.T45D16CIN	175	45	228	48	95	16	-	300
R101200.0002	R101200.T50D16CIN	200	50	240	48	95	16	-	300

R102

max 4 Km/h | +80° -25° | PA6 | RoHS✓ COMPLIANT

18 POLYAMIDE MONOLITHIC WHEEL WITH ROUND STEEL SWIVEL SUPPORT AND SMOOTH THROUGH HOLE WITH BRAKE

Ruote in Nylon monolitico



Materials:

Wheel body (1):

Polyamide. Resistant to oils and greases.

Tread (2):

Polyamide. Resistant to oils and greases.

Surface finish:

Smooth.

Colour:

(1-2) Natural white.

(3-4-5-6) Galvanised blue.

Wheel rotation (4):

The hole for the pivot pin is formed by plastic moulding. A galvanised steel tube is positioned between the stud and the hole for protection.

Bracket (3):

Steel fork (DD13), with integrated brake.

Rotating assembly (5):

Steel rotating assembly with double ball race and smooth fixing hole, (hole tolerance H7).

Wheel fastening (6):

Steel hex head screw, coupled with a steel nut.

Special requests:

Upon request and for a minimum of 20 pieces, the wheel can be supplied with a needle roller cage, (replace code no. R102 with code no. R132).

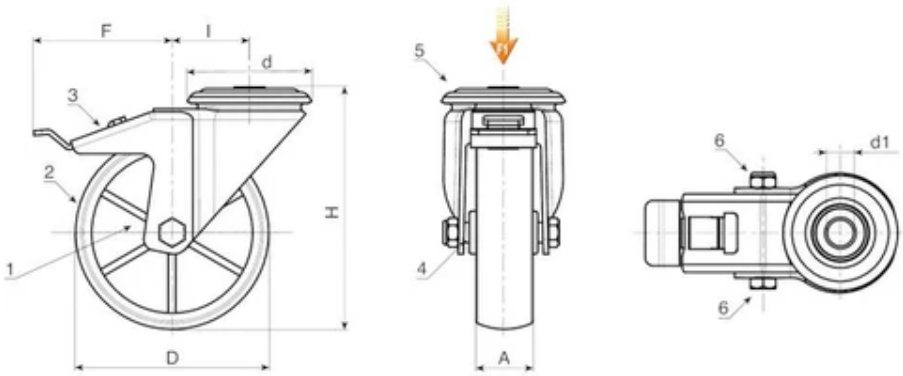

Code	art.	D	A	H	I	d	F	d1 H7	Weight (g)	F1 (Kg)
R102080.0001	R102080.T30D12	80	30	108	32	64	110	12	531	100
R102100.0001	R102100.T30D12	100	30	127	32	64	110	12	512	130
R102125.0001	R102125.T39D12	125	39	155	32	64	113	12	802	130
R102150.0001	R102150.T40D12	150	40	184	35	65	115	12	-	140
R102175.0001	R102175.T45D16	175	45	228	48	95	150	16	-	270
R102200.0001	R102200.T50D16	200	50	240	48	95	150	16	2256	270

R102CIN

INOX | max 4 Km/h | +80° -25° | PA6 | RoHS COMPLIANT

18

POLYAMIDE MONOLITHIC WHEEL WITH ROUND STAINLESS STEEL SWIVEL SUPPORT AND SMOOTH THROUGH HOLE WITH BRAKE

Ruote in Nylon monolitico



Materials:

Wheel body (1):

Polyamide. Resistant to oils and greases.

Tread (2):

Polyamide. Resistant to oils and greases.

Surface finish:

Smooth.

Colour:

(1-2) Natural white.

(3-4-5-6) Natural stainless steel.

Wheel rotation (4):

The hole for the pivot pin is formed by plastic moulding. A stainless steel (Aisi 304) tube is positioned between the stud and the hole for protection.

Bracket (3):

Stainless steel (Aisi 304) fork, with integrated brake.

Rotating assembly (5):

Stainless steel (Aisi 304) rotating assembly with double stainless steel (Aisi 420) ball race and smooth fixing hole, (hole tolerance H7).

Wheel fastening (6):

Stainless steel (Aisi 304) hex head bolt, coupled with a stainless steel (Aisi 304) nut.

Special requests:

Upon request and for a minimum of 20 pieces, the wheel can be supplied with a needle roller cage, (replace code no. R102CIN with code no. R132CIN).

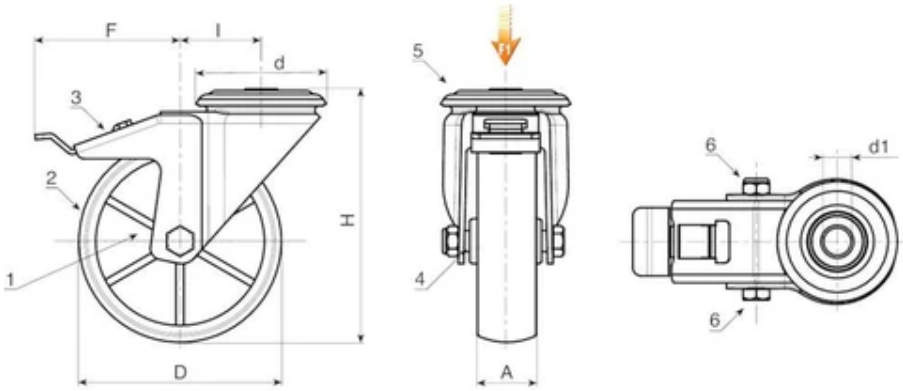

Code	art.	D	A	H	I	d	F	d1 H7	Weight (g)	F1 (Kg)
R102080.0002	R102080.T30D12CIN	80	30	108	32	64	110	12	451	100
R102100.0002	R102100.T30D12CIN	100	30	127	32	64	110	12	706	130
R102125.0002	R102125.T39D12CIN	125	39	155	32	64	113	12	776	130
R102150.0002	R102150.T40D12CIN	150	40	184	35	65	115	12	-	140
R102175.0002	R102175.T45D16CIN	175	45	228	48	95	150	16	-	300
R102200.0002	R102200.T50D16CIN	200	50	240	48	95	150	16	-	300

R107

max 4 Km/h | +80° -25° | PA6 | RoHS COMPLIANT

18 POLYAMIDE MONOLITHIC WHEEL WITH RECTANGULAR SWIVEL STEEL PLATE

Ruote in Nylon monolitico



Materials:

Wheel body (1):

Polyamide. Resistant to oils and greases.

Tread (2):

Polyamide. Resistant to oils and greases.

Surface finish:

Smooth.

Colour:

(1-2) Natural white.

(3-4-5-6) Galvanised blue.

Wheel rotation (4):

The hole for the pivot pin is formed by plastic moulding. A galvanised steel tube is positioned between the stud and the hole for protection.

Bracket (3):

Steel fork (DD13).

Rotating assembly (5):

Steel rotating assembly with double ball race, and rectangular swivel plate with four slotted mounting holes.

Wheel fastening (6):

Steel hex head screw, coupled with a steel nut.

Special requests:

Upon request and for a minimum of 20 pieces, the wheel can be supplied with a needle roller cage, (replace code no. R107 with code no. R137).

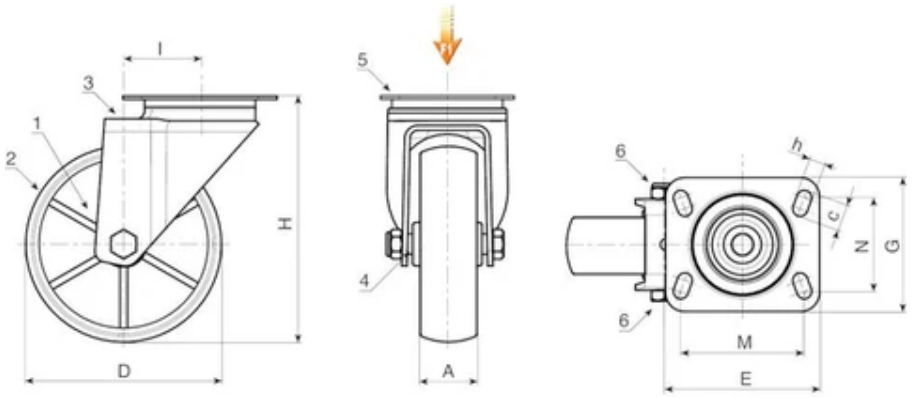

Code	art.	D	A	H	I	E	G	M	N	c	h	Weight (g)	F1 (Kg)
R107080.0001	R107080.T30P080X060	80	30	108	32	95	80	80	60	12	9	427	100
R107100.0001	R107100.T30P080X060	100	30	127	32	95	80	80	60	12	9	468	130
R107125.0001	R107125.T39P080X060	125	39	155	32	95	80	80	60	12	9	617	130
R107150.0001	R107150.T40P080X060	150	40	184	35	95	100	80	60	12	9	-	140
R107175.0001	R107175.T45P105X080	175	45	228	48	129	106	105	80	23	11	1866	270
R107200.0002	R107200.T50P105X080	200	50	240	48	129	106	105	80	23	11	2105	270

R107CIN

INOX | max 4 Km/h | +80° -25° | PA6 | RoHS COMPLIANT

18 POLYAMIDE MONOLITHIC WHEEL WITH RECTANGULAR STAINLESS STEEL SWIVEL PLATE

Ruote in Nylon monolitico



Materials:

Wheel body (1):

Polyamide. Resistant to oils and greases.

Tread (2):

Polyamide. Resistant to oils and greases.

Surface finish:

Smooth.

Colour:

(1-2) Natural white.

(3-4-5-6) Galvanised blue.

Wheel rotation (4):

The hole for the pivot pin is formed by plastic moulding. A galvanised steel tube is positioned between the stud and the hole for protection.

Bracket (3):

Stainless steel (Aisi 304) fork.

Rotating assembly (5):

Stainless steel rotating assembly (Aisi 304) with double stainless steel (Aisi 420) ball race, and rectangular swivel plate with four slotted mounting holes.

Wheel fastening (6):

Stainless steel (Aisi 304) hex head bolt, coupled with a stainless steel (Aisi 304) nut.

Special requests:

Upon request and for a minimum of 20 pieces, the wheel can be supplied with a needle roller cage, (replace code no. R107CIN with code no. R137CIN).

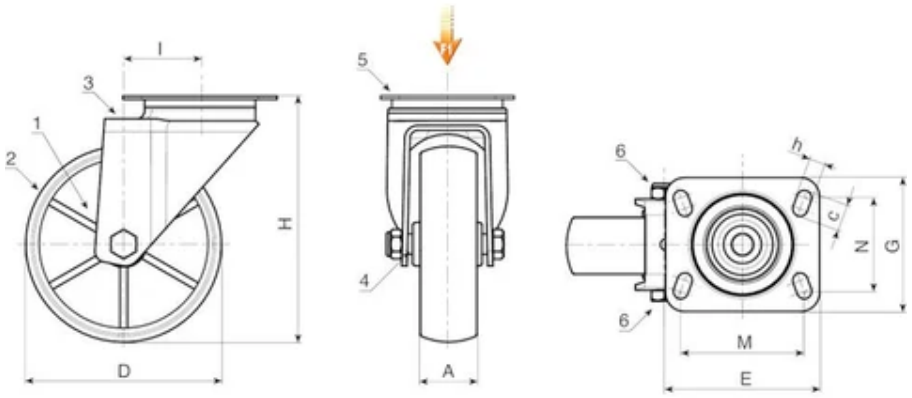

Code	art.	D	A	H	I	E	G	M	N	c	h	Weight (g)	F1 (Kg)
R107080.0002	R107080.T30P080X060CIN	80	30	108	32	95	80	80	60	12	9	410	100
R107100.0002	R107100.T30P080X060CIN	100	30	127	32	95	80	80	60	12	9	450	130
R107125.0002	R107125.T39P080X060CIN	125	39	155	32	95	80	80	60	12	9	888	130
R107150.0002	R107150.T40P080X060CIN	150	40	184	35	95	100	80	60	12	9	-	140
R107175.0002	R107175.T45P105X080CIN	175	45	228	48	129	106	105	80	23	11	1854	300
R107200.0001	R107200.T50P105X080CIN	200	50	240	48	129	106	105	80	23	11	2046	300

R108

max 4 Km/h | +80° -25° | PA6 | RoHS COMPLIANT

18 POLYAMIDE MONOLITHIC WHEEL WITH RECTANGULAR STEEL SWIVEL PLATE WITH BRAKE

Ruote in Nylon monolitico



Materials:

Wheel body (1):

Polyamide. Resistant to oils and greases.

Tread (2):

Polyamide. Resistant to oils and greases.

Surface finish:

Smooth.

Colour:

(1-2) Natural white.

(3-4-5-6) Galvanised blue.

Wheel rotation (4):

The hole for the pivot pin is formed by plastic moulding. A galvanised steel tube is positioned between the stud and the hole for protection.

Bracket (3):

Steel fork (DD13), with integrated brake.

Rotating assembly (5):

Steel rotating assembly with double ball race, and rectangular swivel plate with four slotted mounting holes.

Wheel fastening (6):

Steel hex head screw, coupled with a steel nut.

Special requests:

Upon request and for a minimum of 20 pieces, the wheel can be supplied with a needle roller cage, (replace code no. R108 with code no. R138).

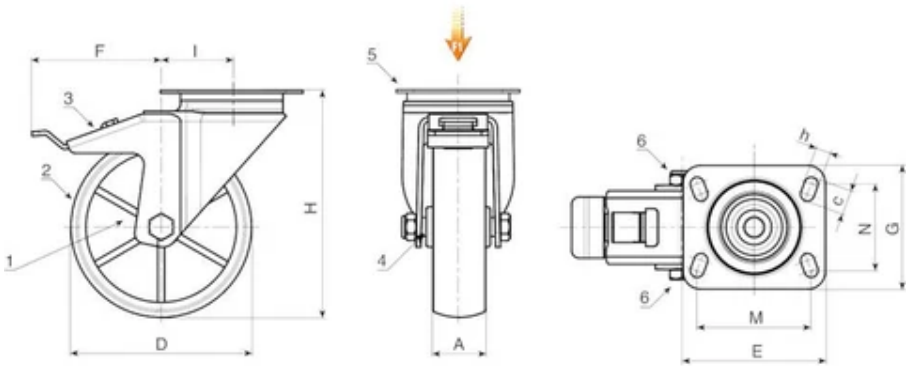

Code	art.	D	A	H	I	E	G	M	N	c	h	F	Weight (g)	F1 (Kg)
R108080.0001	R108080.T30P080X060	80	30	108	32	95	80	80	60	12	9	110	545	100
R108100.0001	R108100.T30P080X060	100	30	127	32	95	80	80	60	12	9	110	592	130
R108125.0001	R108125.T39P080X060	125	39	155	32	95	80	80	60	12	9	113	914	130
R108150.0001	R108150.T40P080X060	150	40	184	35	95	100	80	60	12	9	115	-	140
R108175.0001	R108175.T45P105X080	175	45	228	48	129	106	105	80	23	11	150	2192	270
R108200.0001	R108200.T50P105X080	200	50	240	48	129	106	105	80	23	11	150	2386	270

R108CIN

INOX | max 4 Km/h | +80° -25° | PA6 | RoHS COMPLIANT

18 POLYAMIDE MONOLITHIC WHEEL WITH RECTANGULAR STAINLESS STEEL SWIVEL PLATE WITH BRAKE

Ruote in Nylon monolitico



Materials:

Wheel body (1):

Polyamide. Resistant to oils and greases.

Tread (2):

Polyamide. Resistant to oils and greases.

Surface finish:

Smooth.

Colour:

(1-2) Natural white.

(3-4-5-6) Natural stainless steel.

Wheel rotation (4):

The hole for the pivot pin is formed by plastic moulding. A stainless steel (Aisi 304) tube is positioned between the stud and the hole for protection.

Bracket (3):

Stainless steel (Aisi 304) fork, with integrated brake.

Rotating assembly (5):

Stainless steel rotating assembly (Aisi 304) with double stainless steel (Aisi 420) ball race, and rectangular swivel plate with four slotted mounting holes.

Wheel fastening (6):

Stainless steel (Aisi 304) hex head bolt, coupled with a stainless steel (Aisi 304) nut.

Special requests:

Upon request and for a minimum of 20 pieces, the wheel can be supplied with a needle roller cage, (replace code no. R108CIN with code no. R138CIN).

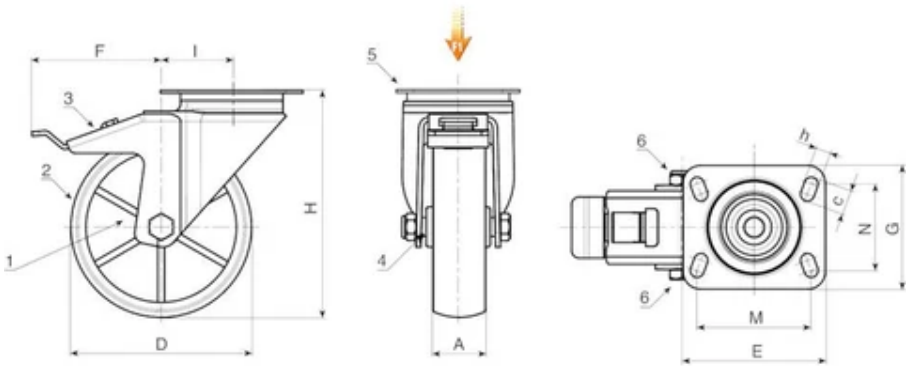

Code	art.	D	A	H	I	E	G	M	N	c	h	F	Weight (g)	F1 (Kg)
R108080.0002	R108080.T30P080X060CIN	80	30	108	32	95	80	80	60	12	9	110	462	100
R108100.0002	R108100.T30P080X060CIN	100	30	127	32	95	80	80	60	12	9	110	568	130
R108125.0002	R108125.T39P080X060CIN	125	39	155	32	95	80	80	60	12	9	113	850	130
R108150.0002	R108150.T40P080X060CIN	150	40	184	35	95	100	80	60	12	9	115	-	140
R108175.0002	R108175.T45P105X080CIN	175	45	228	48	129	106	105	80	23	11	150	-	300
R108200.0002	R108200.T50P105X080CIN	200	50	240	48	129	106	105	80	23	11	150	2402	300

R109

max 4 Km/h | +80° -25° | PA6 | RoHS✓ COMPLIANT

18

POLYAMIDE MONOLITHIC WHEEL WITH RIGID STEEL FORK

Ruote in Nylon monolitico



Materials:

Wheel body (1):

Polyamide. Resistant to oils and greases.

Tread (2):

Polyamide. Resistant to oils and greases.

Surface finish:

Smooth.

Colour:

(1-2) Natural white.

(3-4-6) Galvanised blue.

Wheel rotation (4):

The hole for the pivot pin is formed by plastic moulding. A galvanised steel tube is positioned between the stud and the hole for protection.

Bracket (3):

Rigid steel (DD13) fork, with mounting holes in the base.

Wheel fastening (6):

Steel hex head screw, coupled with a steel nut.

Special requests:

Upon request and for a minimum of 20 pieces, the wheel can be supplied with a needle roller cage, (replace code no. R109 with code no. R139).

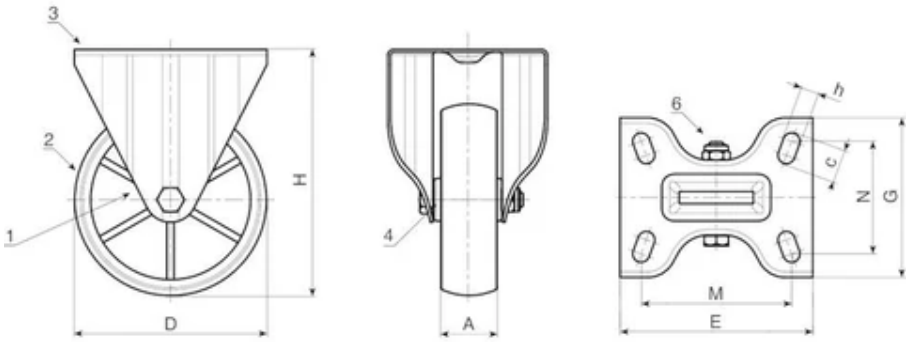

Code	art.	D	A	H	E	G	M	N	c	h	Weight (g)	F1 (Kg)
R109080.0001	R109080.T30P080X060	80	30	108	100	84	80	60	12	9	338	100
R109100.0001	R109100.T30P080X060	100	30	127	100	84	80	60	12	9	378	130
R109125.0001	R109125.T39P080X060	125	39	155	100	84	80	60	12	9	639	180
R109150.0001	R109150.T40P080X060	150	40	184	100	84	80	60	12	9	-	140
R109175.0001	R109175.T45P105X080	175	45	228	135	110	105	80	23	11	-	270
R109200.0001	R109200.T50P105X080	200	50	240	135	110	105	80	23	11	1444	300

R109CIN

INOX | max 4 Km/h | +80° -25° | PA6 | RoHS COMPLIANT

18 POLYAMIDE MONOLITHIC WHEEL WITH RIGID STAINLESS STEEL FORK

Ruote in Nylon monolitico



Materials:

Wheel body (1):

Polyamide. Resistant to oils and greases.

Tread (2):

Polyamide. Resistant to oils and greases.

Surface finish:

Smooth.

Colour:

(1-2) Natural white.

(3-4-6) Natural stainless steel.

Wheel rotation (4):

The hole for the pivot pin is formed by plastic moulding. A stainless steel (Aisi 304) tube is positioned between the stud and the hole for protection.

Bracket (3):

Rigid stainless steel (Aisi 304) fork, with mounting holes in the base.

Wheel fastening (6):

Stainless steel (Aisi 304) hex head bolt, coupled with a stainless steel (Aisi 304) nut.

Special requests:

Upon request and for a minimum of 20 pieces, the wheel can be supplied with a needle roller cage, (replace code no. R109CIN with code no. R139CIN).

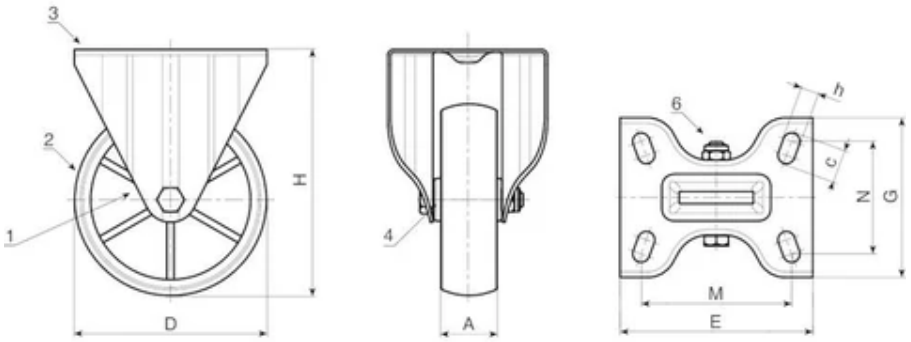

Code	art.	D	A	H	E	G	M	N	c	h	Weight (g)	F1 (Kg)
R109080.0002	R109080.T30P080X060CIN	80	30	108	100	84	80	60	12	9	312	100
R109100.0002	R109100.T30P080X060CIN	100	30	127	100	84	80	60	12	9	347	130
R109125.0002	R109125.T39P080X060CIN	125	39	155	100	84	80	60	12	9	532	180
R109150.0002	R109150.T40P080X060CIN	150	40	184	100	84	80	60	12	9	-	140
R109175.0002	R109175.T45P105X080CIN	175	45	228	135	110	105	80	23	11	-	300
R109200.0002	R109200.T50P105X080CIN	200	50	240	135	110	105	80	23	11	1444	300

R150

max 4 Km/h | +80° -25° | PA6 | RoHS COMPLIANT

18 POLYAMIDE MONOLITHIC WHEEL WITH BALL BEARING WITHOUT RIG (HEAVY DUTY)

Ruote in Nylon monolitico



Materials:

Wheel body:

Polyamide. Resistant to oils and greases.

Tread:

Polyamide. Resistant to oils and greases.

Surface finish:

Smooth.

Colour:

Natural white.

Wheel rotation:

(1) A pair of steel ball bearings is inserted in the wheel hub to provide excellent rollability under a heavy load.

Special requests:

Upon request and for a minimum of 20 pieces, the wheel can be supplied with a needle roller cage, (replace code no. R150 with code no. R140).

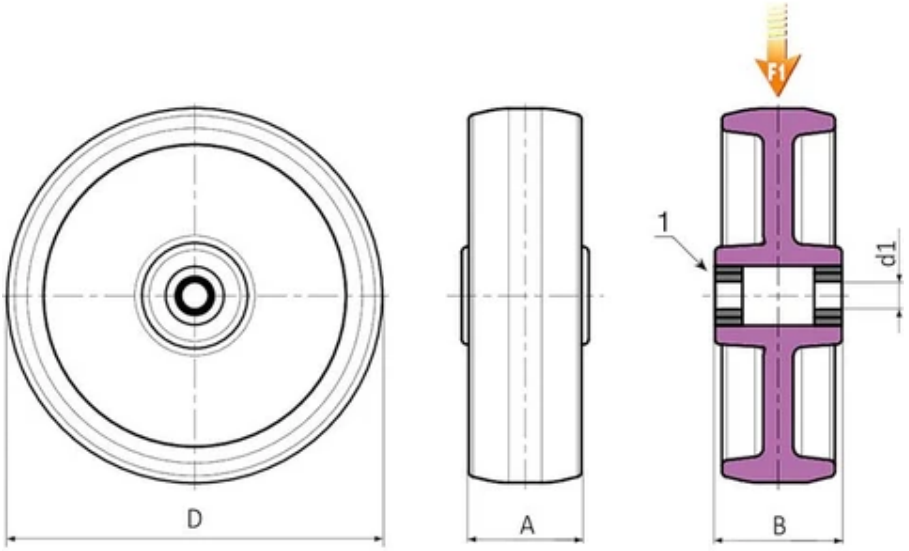

Code	art.	D	A	B	d1	Weight (g)	F1 (Kg)
R150100.0001	R150100.T35D15	100	35	40	15	-	370
R150125.0001	R150125.T35D15	125	35	40	15	-	380
R150125.0002	R150125.T45D20	125	45	58	20	-	600
R150150.0001	R150150.T40D20	150	40	49	20	-	380
R150150.0002	R150150.T45D20	150	45	58	20	-	700
R150200.0001	R150200.T50D20	200	50	58	20	-	800

R157

max 4 Km/h | +80° -25° | PA6 | RoHS COMPLIANT

18 POLYAMIDE MONOLITHIC WHEEL WITH RECTANGULAR SWIVEL STEEL PLATE WITH BEARING (HEAVY DUTY)

Ruote in Nylon monolitico



Materials:
Wheel body (1):
Polyamide. Resistant to oils and greases.
Tread (2):
Polyamide. Resistant to oils and greases.

Surface finish:
Smooth.

Colour:
(1-2) Natural white.
(3-4-5-6) Galvanised blue.

Wheel rotation (4):
A pair of steel ball bearings is inserted to provide excellent rollability.

Bracket (3):
Extra-thick steel (DD13) fork.

Rotating assembly (5):
Steel rotating assembly with double ball race, assembled with steel screw grade 8.8 and rectangular swivel plate with four slotted mounting holes.

Wheel fastening (6):
Steel hex head screw, coupled with a self-locking steel nut.

Special requests:
Upon request and for a minimum of 20 pieces, the wheel can be supplied with a needle roller cage, (replace code no. R157 with code no. R147).

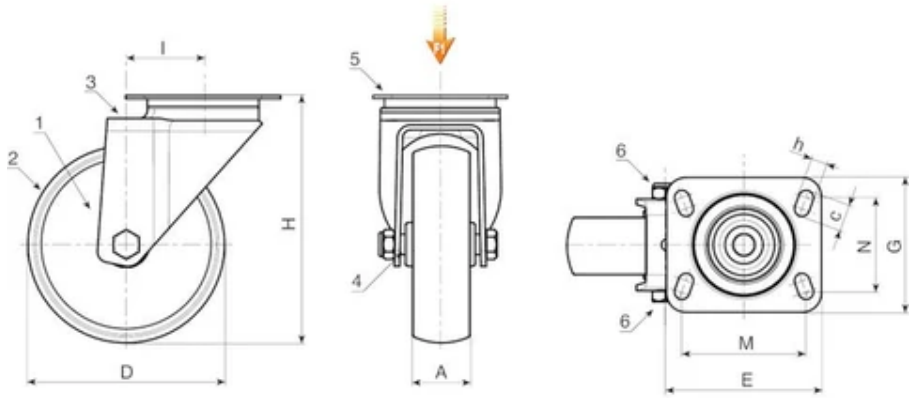

Code	art.	D	A	H	I	E	G	M	N	c	h	Weight (g)	F1 (Kg)
R157100.0001	R157100.T35P080X060	100	35	135	47	100	84	80	60	12	9	-	370
R157125.0001	R157125.T35P080X060	125	35	161	51	100	84	80	60	12	9	-	380
R157125.0002	R157125.T45P105X080	125	45	164	61	132	110	105	80	23	12	-	600
R157150.0001	R157150.T40P105X080	150	40	188	45	132	110	105	80	23	12	-	330
R157150.0002	R157150.T45P105X080	150	45	195	60	132	110	105	80	23	12	-	600
R157200.0001	R157200.T50P105X080	200	50	242	59	132	110	105	80	23	12	-	600

R158

max 4 Km/h | +80° -25° | PA6 | RoHS COMPLIANT

18 POLYAMIDE MONOLITHIC WHEEL WITH RECTANGULAR SWIVEL STEEL PLATE WITH BEARING - WITH BRAKE (HEAVY DUTY)

Ruote in Nylon monolitico



Materials:
Wheel body (1):
Polyamide. Resistant to oils and greases.
Tread (2):
Polyamide. Resistant to oils and greases.

Surface finish:
Smooth.

Colour:
(1-2) Natural white.
(3-4-5-6) Galvanised blue.

Wheel rotation (4):
A pair of steel ball bearings is inserted to provide excellent rollability.

Bracket (3):
Extra-thick steel (DD13) fork, with integrated brake.

Rotating assembly (5):
Steel rotating assembly with double ball race, assembled with steel screw grade 8.8 and rectangular swivel plate with four slotted mounting holes.

Wheel fastening (6):
Steel hex head screw, coupled with a self-locking steel nut.

Special requests:
Upon request and for a minimum of 20 pieces, the wheel can be supplied with a needle roller cage, (replace code no. R158 with code no. R148).

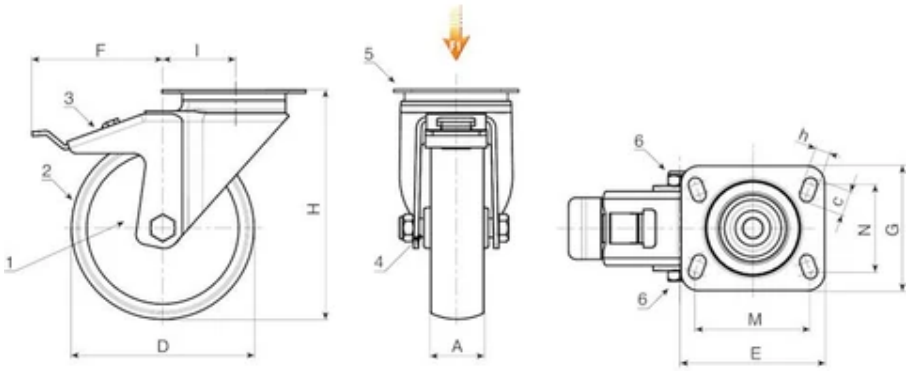

Code	art.	D	A	H	I	E	G	M	N	c	h	F	Weight (g)	F1 (Kg)
R158100.0001	R158100.T35P080X060	100	35	135	47	100	84	80	60	12	9	99	-	370
R158125.0001	R158125.T35P080X060	125	35	161	51	100	84	80	60	12	9	100	-	380
R158125.0002	R158125.T45P105X080	125	45	164	61	132	110	105	80	23	12	104	-	600
R158150.0001	R158150.T40P105X080	150	40	188	45	132	110	105	80	23	12	108	-	330
R158150.0002	R158150.T45P105X080	150	45	195	60	132	110	105	80	23	12	107	-	600
R158200.0001	R158200.T50P105X080	200	50	242	59	132	110	105	80	23	12	109	-	600

R159

max 4 Km/h | +80° -25° | PA6 | RoHS COMPLIANT

18 POLYAMIDE MONOLITHIC WHEEL WITH RIGID STEEL FORK WITH BEARING (HEAVY DUTY)

Ruote in Nylon monolitico



Materials:
Wheel body (1):
Polyamide. Resistant to oils and greases.
Tread (2):
Polyamide. Resistant to oils and greases.

Surface finish:
Smooth.

Colour:
(1-2) Natural white.
(3-4-5-6) Galvanised blue.

Wheel rotation (4):
A pair of steel ball bearings is inserted to provide excellent rollability.

Bracket (3):
Extra-thick steel (DD13) fork, with mounting holes in the base.

Wheel fastening (6):
Steel hex head screw, coupled with a self-locking steel nut.

Special requests:
Upon request and for a minimum of 20 pieces, the wheel can be supplied with a needle roller cage, (replace code no. R159 with code no. R149).

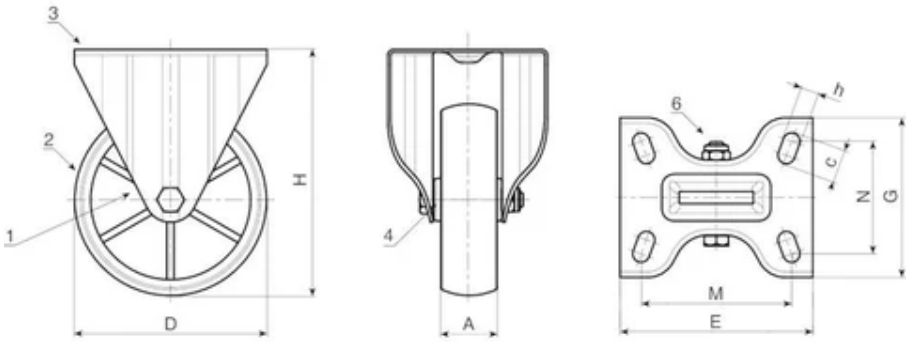

Code	art.	D	A	H	E	G	M	N	c	h	Weight (g)	F1 (Kg)
R159100.0001	R159100.T35P080X060	100	35	135	100	88	80	60	12	9	-	370
R159125.0001	R159125.T35P080X060	125	35	161	100	88	80	60	12	9	-	380
R159125.0002	R159125.T45P105X080	125	45	164	134	114	105	80	23	12	-	600
R159150.0001	R159150.T40P105X080	150	40	188	134	111	105	80	23	12	-	330
R159150.0002	R159150.T45P105X080	150	45	195	134	114	105	80	23	12	-	600
R159200.0001	R159200.T50P105X080	200	50	242	134	114	105	80	23	12	-	600

R200

max 4 Km/h | +60° -20° | PA6 | PU | RoHS COMPLIANT

18 WHEEL WITH POLYAMIDE BODY AND INJECTED POLYURETHANE TREAD (WITHOUT RIG)

Ruote in Nylon/Poliuretano



Materials:

Wheel body:

Polyamide. Resistant to oils and greases.

Tread:

Injected polyurethane. Hardness 60 ± 5 Shore D.

Surface finish:

Smooth.

Colour:

Body:

Natural white.

Tread:

Red (Ral 3013).

Wheel rotation:

The hole for the pivot pin is formed by plastic moulding.

Special requests:

Upon request and for a minimum of 20 pieces, the wheel can be supplied with a needle roller cage, (replace code no. R200 with code no. R230).

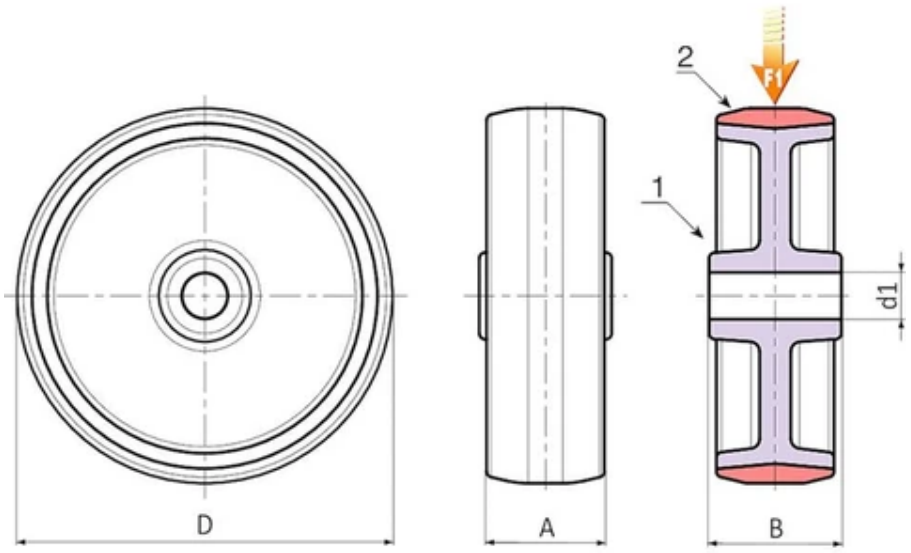

Code	art.	D	A	B	d1	Weight (g)	F1 (Kg)
R200080.0001	R200080.T30D12	80	30	40	12	104	100
R200100.0001	R200100.T30D12	100	30	40	12	152	130
R200125.0001	R200125.T35D15	125	35	44	15	254	200
R200150.0001	R200150.T40D15	150	40	44	15	229	250
R200200.0001	R200200.T50D20	200	50	58	20	818	365

R201

max 4 Km/h | +60° -20° | PA6 | PU | RoHS COMPLIANT

18

POLYAMIDE / POLYURETHANE WHEEL WITH ROUND STEEL SWIVEL SUPPORT AND SMOOTH THROUGH HOLE

Ruote in Nylon/Poliuretano



Materials:

Wheel body (1):

Polyamide. Resistant to oils and greases.

Tread (2):

Injected polyurethane. Hardness 60 ± 5 Shore D.

Surface finish:

Smooth.

Colour:

(1) Natural white.

(2) Red (Ral 3013).

(3-4-5-6) Galvanised blue.

Wheel rotation (4):

The hole for the pivot pin is formed by plastic moulding. A galvanised steel tube is positioned between the stud and the hole for protection.

Bracket (3):

Steel fork (DD13).

Rotating assembly (5):

Steel rotating assembly with double ball race and smooth fixing hole, (hole tolerance H7).

Wheel fastening (6):

Steel hex head screw, coupled with a steel nut.

Special requests:

Upon request and for a minimum of 20 pieces, the wheel can be supplied with a needle roller cage, (replace code no. R201 with code no. R231).

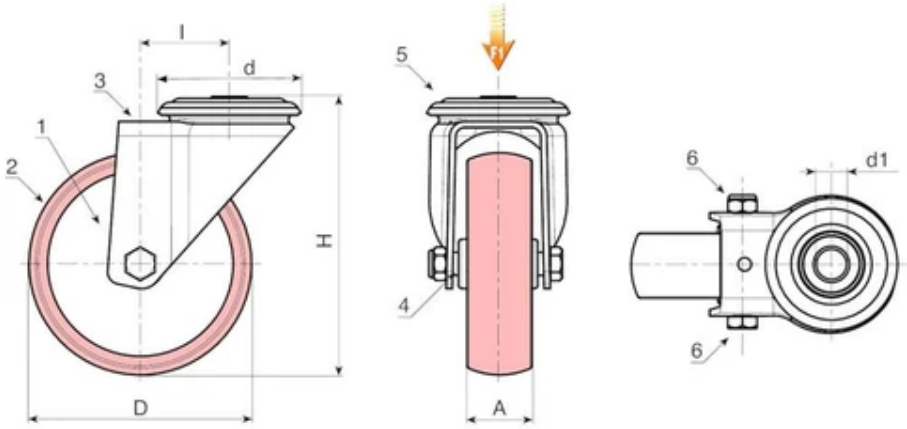

Code	art.	D	A	H	l	d	d1 H7	Weight (g)	F1 (Kg)
R201080.0001	R201080.T30D12	80	30	108	32	64	12	486	100
R201100.0001	R201100.T30D12	100	30	127	32	64	12	1170	130
R201125.0001	R201125.T35D12	125	35	155	32	64	12	772	130
R201150.0001	R201150.T40D12	150	40	184	35	65	12	-	140
R201200.0001	R201200.T50D16	200	50	240	48	95	16	1934	270

R201CIN

INOX | max 4 Km/h | +60° -20° | PA6 | PU | RoHS COMPLIANT

18

POLYAMIDE / POLYURETHANE WHEEL WITH ROUND STAINLESS STEEL SWIVEL SUPPORT AND SMOOTH THROUGH HOLE

Ruote in Nylon/Poliuretano



Materials:

Wheel body (1):

Polyamide. Resistant to oils and greases.

Tread (2):

Injected polyurethane. Hardness 60 ± 5 Shore D.

Surface finish:

Smooth.

Colour:

(1) Natural white.

(2) Red (Ral 3013).

(3-4-5-6) Natural stainless steel.

Wheel rotation (4):

The hole for the pivot pin is formed by plastic moulding. A stainless steel (Aisi 304) tube is positioned between the stud and the hole for protection.

Bracket (3):

Stainless steel (Aisi 304) fork.

Rotating assembly (5):

Stainless steel (Aisi 304) rotating assembly with double stainless steel (Aisi 420) ball race and smooth fixing hole, (hole tolerance H7).

Wheel fastening (6):

Stainless steel (Aisi 304) hex head bolt, coupled with a stainless steel (Aisi 304) nut.

Special requests:

Upon request and for a minimum of 20 pieces, the wheel can be supplied with a needle roller cage, (replace code no. R201CIN with code no. R231CIN).

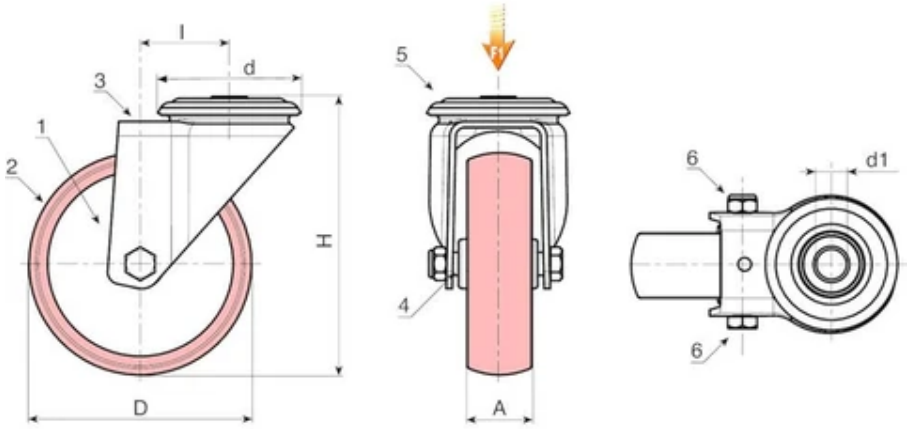

Code	art.	D	A	H	l	d	d1 H7	Weight (g)	F1 (Kg)
R201080.0002	R201080.T30D12CIN	80	30	108	32	64	12	486	100
R201100.0002	R201100.T30D12CIN	100	30	127	32	64	12	544	130
R201125.0002	R201125.T35D12CIN	125	35	155	32	64	12	654	130
R201150.0002	R201150.T40D12CIN	150	40	184	35	65	12	-	140
R201200.0002	R201200.T50D16CIN	200	50	240	48	95	16	-	300

R202

max 4 Km/h | +60° -20° | PA6 | PU | RoHS COMPLIANT

18

POLYAMIDE / POLYURETHANE WHEEL WITH ROUND STEEL SWIVEL SUPPORT AND SMOOTH THROUGH HOLE - WITH BRAKE

Ruote in Nylon/Poliuretano



Materials:

Wheel body (1):

Polyamide. Resistant to oils and greases.

Tread (2):

Injected polyurethane. Hardness 60 ± 5 Shore D.

Surface finish:

Smooth.

Colour:

(1) Natural white.

(2) Red (Ral 3013).

(3-4-5-6) Galvanised blue.

Wheel rotation (4):

The hole for the pivot pin is formed by plastic moulding. A galvanised steel tube is positioned between the stud and the hole for protection.

Bracket (3):

Steel fork (DD13), with integrated brake.

Rotating assembly (5):

Steel rotating assembly with double ball race and smooth fixing hole, (hole tolerance H7).

Wheel fastening (6):

Steel hex head screw, coupled with a steel nut.

Special requests:

Upon request and for a minimum of 20 pieces, the wheel can be supplied with a needle roller cage, (replace code no. R202 with code no. R232).

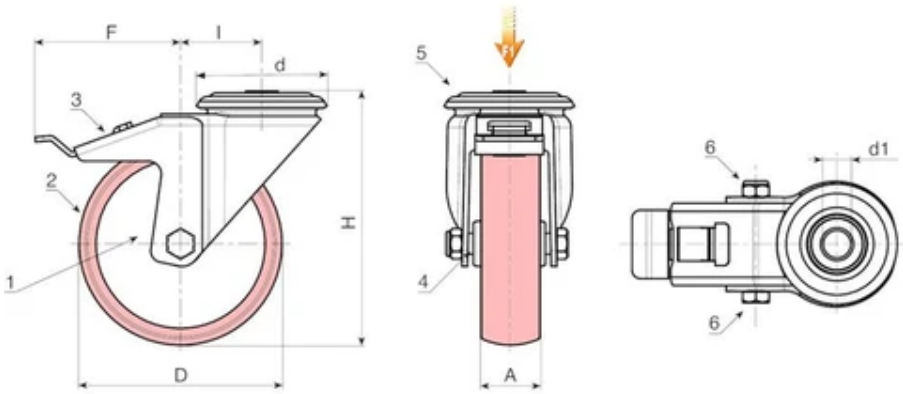

Code	art.	D	A	H	l	d	F	d1 H7	Weight (g)	F1 (Kg)
R202080.0001	R202080.T30D12	80	30	108	32	64	110	12	617	100
R202100.0001	R202100.T30D12	100	30	127	32	64	110	12	664	130
R202125.0001	R202125.T35D12	125	35	155	32	64	113	12	978	130
R202150.0001	R202150.T40D12	150	40	184	35	65	115	12	-	140
R202200.0001	R202200.T50D16	200	50	240	48	95	150	16	-	270

R202CIN

INOX | max 4 Km/h | +60° -20° | PA6 | PU | RoHS COMPLIANT

18 POLYAMIDE / POLYURETHANE WHEEL WITH ROUND STAINLESS STEEL SWIVEL SUPPORT AND SMOOTH THROUGH HOLE - WITH BRAKE

Ruote in Nylon/Poliuretano



Materials:

Wheel body (1):

Polyamide. Resistant to oils and greases.

Tread (2):

Injected polyurethane. Hardness 60 ± 5 Shore D.

Surface finish:

Smooth.

Colour:

(1) Natural white.

(2) Red (Ral 3013).

(3-4-5-6) Natural stainless steel.

Wheel rotation (4):

The hole for the pivot pin is formed by plastic moulding. A stainless steel (Aisi 304) tube is positioned between the stud and the hole for protection.

Bracket (3):

Stainless steel (Aisi 304) fork, with integrated brake.

Rotating assembly (5):

Stainless steel (Aisi 304) rotating assembly with double stainless steel (Aisi 420) ball race and smooth fixing hole, (hole tolerance H7).

Wheel fastening (6):

Stainless steel (Aisi 304) hex head bolt, coupled with a stainless steel (Aisi 304) nut.

Special requests:

Upon request and for a minimum of 20 pieces, the wheel can be supplied with a needle roller cage, (replace code no. R202CIN with code no. R232CIN).

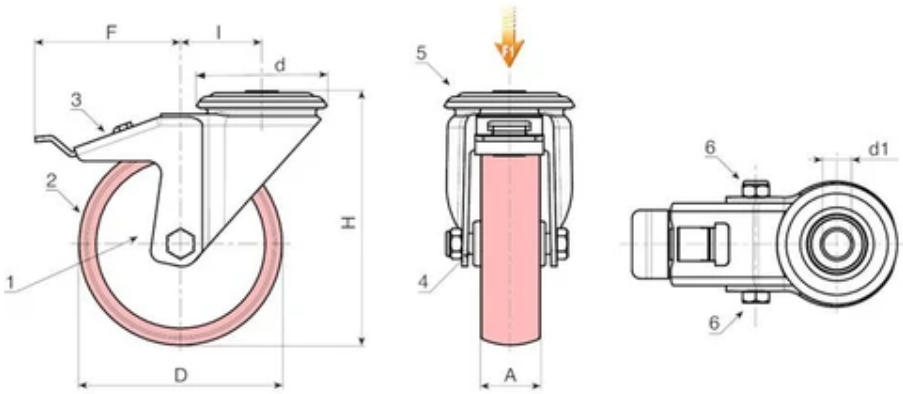

Code	art.	D	A	H	l	d	F	d1 H7	Weight (g)	F1 (Kg)
R202080.0002	R202080.T30D12CIN	80	30	108	32	64	110	12	626	100
R202100.0002	R202100.T30D12CIN	100	30	127	32	64	110	12	728	130
R202125.0002	R202125.T35D12CIN	125	35	155	32	64	113	12	796	130
R202150.0002	R202150.T40D12CIN	150	40	184	35	65	115	12	-	140
R202200.0002	R202200.T50D16CIN	200	50	240	48	95	150	16	2050	300

R207

max 4 Km/h | +60° -20° | PA6 | PU | RoHS COMPLIANT

18 POLYAMIDE / POLYURETHANE WHEEL WITH RECTANGULAR SWIVEL STEEL PLATE

Ruote in Nylon/Poliuretano



Materials:

Wheel body (1):

Polyamide. Resistant to oils and greases.

Tread (2):

Injected polyurethane. Hardness 60 ± 5 Shore D.

Surface finish:

Smooth.

Colour:

(1) Natural white.

(2) Red (Ral 3013).

(3-4-5-6) Galvanised blue.

Wheel rotation (4):

The hole for the pivot pin is formed by plastic moulding. A galvanised steel tube is positioned between the stud and the hole for protection.

Bracket (3):

Steel fork (DD13).

Rotating assembly (5):

Steel rotating assembly with double ball race, and rectangular swivel plate with four slotted mounting holes.

Wheel fastening (6):

Steel hex head screw, coupled with a steel nut.

Special requests:

Upon request and for a minimum of 20 pieces, the wheel can be supplied with a needle roller cage, (replace code no. R207 with code no. R237).

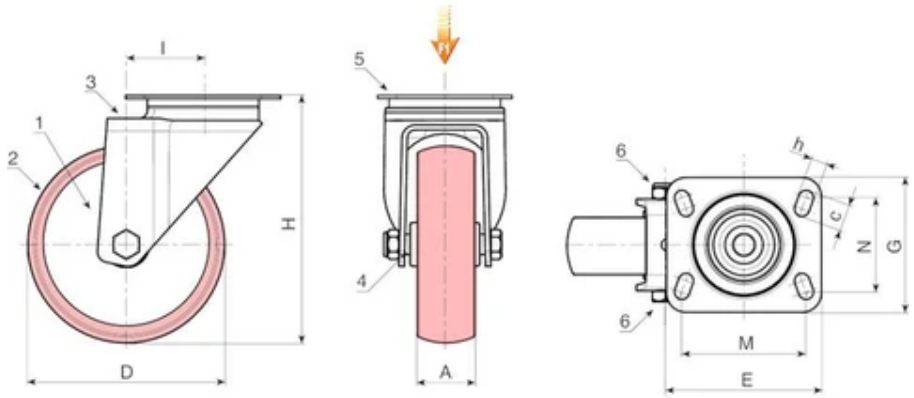

Code	art.	D	A	H	I	E	G	M	N	c	h	Weight (g)	F1 (Kg)
R207080.0001	R207080.T30P080X060	80	30	108	32	95	80	80	60	12	9	587	100
R207100.0001	R207100.T30P080X060	100	30	127	32	95	80	80	60	12	9	480	130
R207125.0001	R207125.T35P080X060	125	35	155	32	95	80	80	60	12	9	790	130
R207150.0001	R207150.T40P080X060	150	40	184	35	100	80	80	60	12	9	-	140
R207200.0001	R207200.T50P105X080	200	50	240	48	129	106	105	80	23	11	1691	270

R207CIN

INOX | max 4 Km/h | +60° -20° | PA6 | PU | RoHS COMPLIANT

18 POLYAMIDE / POLYURETHANE WHEEL WITH RECTANGULAR STAINLESS STEEL SWIVEL PLATE

Ruote in Nylon/Poliuretano



Materials:

Wheel body (1):

Polyamide. Resistant to oils and greases.

Tread (2):

Injected polyurethane. Hardness 60 ± 5 Shore D.

Surface finish:

Smooth.

Colour:

(1) Natural white.

(2) Red (Ral 3013).

(3-4-5-6) Natural stainless steel.

Wheel rotation (4):

The hole for the pivot pin is formed by plastic moulding. A stainless steel (Aisi 304) tube is positioned between the stud and the hole for protection.

Bracket (3):

Stainless steel (Aisi 304) fork.

Rotating assembly (5):

Stainless steel rotating assembly (Aisi 304) with double stainless steel (Aisi 420) ball race, and rectangular swivel plate with four slotted mounting holes.

Wheel fastening (6):

Stainless steel (Aisi 304) hex head bolt, coupled with a stainless steel (Aisi 304) nut.

Special requests:

Upon request and for a minimum of 20 pieces, the wheel can be supplied with a needle roller cage, (replace code no. R207CIN with code no. R237CIN).

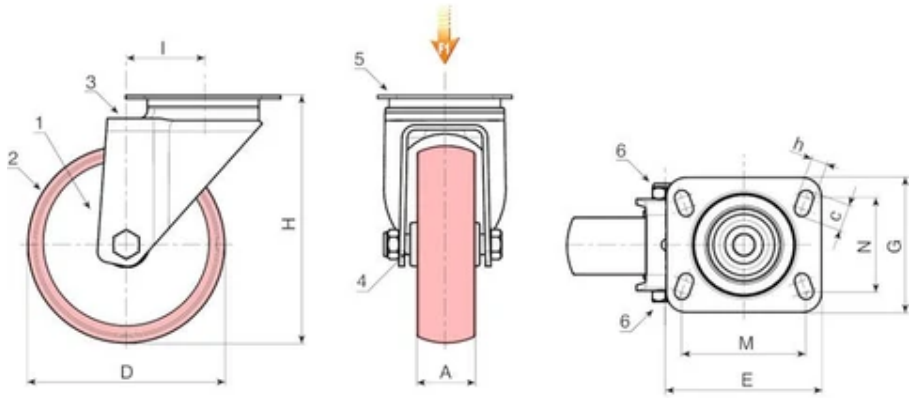

Code	art.	D	A	H	I	E	G	M	N	c	h	Weight (g)	F1 (Kg)
R207080.0002	R207080.T30P080X060CIN	80	30	108	32	95	80	80	60	12	9	444	100
R207100.0002	R207100.T30P080X060CIN	100	30	127	32	95	80	80	60	12	9	494	130
R207125.0002	R207125.T35P080X060CIN	125	35	155	32	95	80	80	60	12	9	610	130
R207150.0002	R207150.T40P080X060CIN	150	40	184	35	100	80	80	60	12	9	-	140
R207200.0002	R207200.T50P105X080CIN	200	50	240	48	129	106	105	80	23	11	2246	300

R208

max 4 Km/h | +60° -20° | PA6 | PU | RoHS COMPLIANT

18

POLYAMIDE / POLYURETHANE WHEEL WITH RECTANGULAR SWIVEL STEEL PLATE - WITH BRAKE

Ruote in Nylon/Poliuretano



Materials:

Wheel body (1):

Polyamide. Resistant to oils and greases.

Tread (2):

Injected polyurethane. Hardness 60 ± 5 Shore D.

Surface finish:

Smooth.

Colour:

(1) Natural white.

(2) Red (Ral 3013).

(3-4-5-6) Galvanised blue.

Wheel rotation (4):

The hole for the pivot pin is formed by plastic moulding. A galvanised steel tube is positioned between the stud and the hole for protection.

Bracket (3):

Steel fork (DD13), with integrated brake.

Rotating assembly (5):

Steel rotating assembly with double ball race, and rectangular swivel plate with four slotted mounting holes.

Wheel fastening (6):

Steel hex head screw, coupled with a steel nut.

Special requests:

Upon request and for a minimum of 20 pieces, the wheel can be supplied with a needle roller cage, (replace code no. R208 with code no. R238).

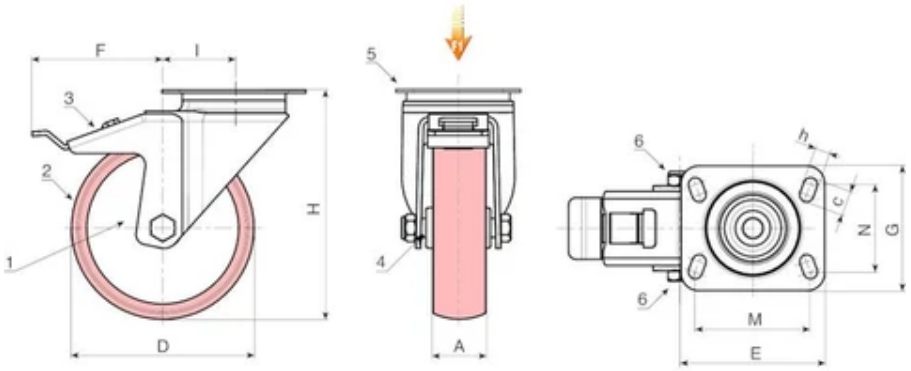

Code	art.	D	A	H	I	E	G	M	N	c	h	F	Weight (g)	F1 (Kg)
R208080.0001	R208080.T30P080X060	80	30	108	32	95	80	80	60	12	9	110	771	100
R208100.0001	R208100.T30P080X060	100	30	127	32	95	80	80	60	12	9	110	692	130
R208125.0001	R208125.T35P080X060	125	35	155	32	95	80	80	60	12	9	113	960	130
R208150.0001	R208150.T40P080X060	150	40	184	35	95	100	80	60	12	9	115	-	140
R208200.0001	R208200.T50P105X080	200	50	240	48	129	106	105	80	23	11	150	-	270

R208CIN

INOX | max 4 Km/h | +60° -20° | PA6 | PU | RoHS COMPLIANT

18 POLYAMIDE / POLYURETHANE WHEEL WITH RECTANGULAR STAINLESS STEEL SWIVEL PLATE - WITH BRAKE

Ruote in Nylon/Poliuretano



Materials:

Wheel body (1):

Polyamide. Resistant to oils and greases.

Tread (2):

Injected polyurethane. Hardness 60 ± 5 Shore D.

Surface finish:

Smooth.

Colour:

(1) Natural white.

(2) Red (Ral 3013).

(3-4-5-6) Natural stainless steel.

Wheel rotation (4):

The hole for the pivot pin is formed by plastic moulding. A stainless steel (Aisi 304) tube is positioned between the stud and the hole for protection.

Bracket (3):

Stainless steel (Aisi 304) fork, with integrated brake.

Rotating assembly (5):

Stainless steel rotating assembly (Aisi 304) with double stainless steel (Aisi 420) ball race, and rectangular swivel plate with four slotted mounting holes.

Wheel fastening (6):

Stainless steel (Aisi 304) hex head bolt, coupled with a stainless steel (Aisi 304) nut.

Special requests:

Upon request and for a minimum of 20 pieces, the wheel can be supplied with a needle roller cage, (replace code no. R208CIN with code no. R238CIN).

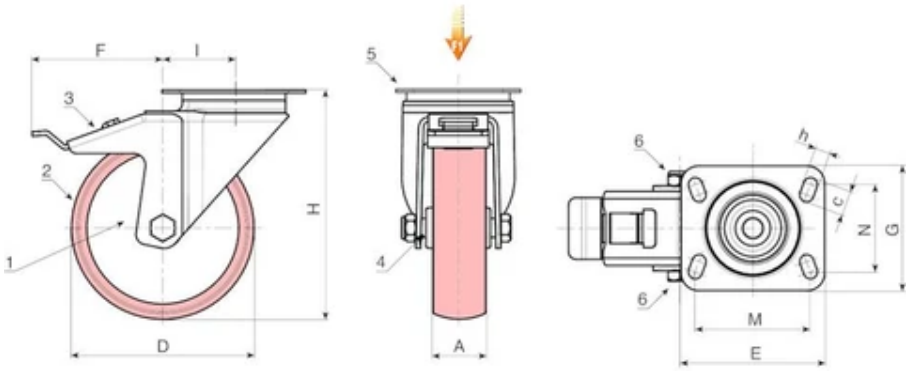

Code	art.	D	A	H	I	E	G	M	N	c	h	F	Weight (g)	F1 (Kg)
R208080.0002	R208080.T30P080X060CIN	80	30	108	32	95	80	80	60	12	9	110	558	100
R208100.0002	R208100.T30P080X060CIN	100	30	127	32	95	80	80	60	12	9	110	616	130
R208125.0002	R208125.T35P080X060CIN	125	35	155	32	95	80	80	60	12	9	113	760	130
R208150.0002	R208150.T40P080X060CIN	150	40	184	35	95	100	80	60	12	9	115	-	140
R208200.0002	R208200.T50P105X080CIN	200	50	240	48	129	106	105	80	23	11	150	2602	300

R209

max 4 Km/h | +60° -20° | PA6 | PU | RoHS COMPLIANT

18

POLYAMIDE / POLYURETHANE WHEEL WITH RIGID STEEL FORK

Ruote in Nylon/Poliuretano



Materials:

Wheel body (1):

Polyamide. Resistant to oils and greases.

Tread (2):

Injected polyurethane. Hardness 60 ± 5 Shore D.

Surface finish:

Smooth.

Colour:

(1) Natural white.

(2) Red (Ral 3013).

(3-4-6) Galvanised blue.

Wheel rotation (4):

The hole for the pivot pin is formed by plastic moulding. A galvanised steel tube is positioned between the stud and the hole for protection.

Bracket (3):

Rigid steel (DD13) fork, with mounting holes in the base.

Wheel fastening (6):

Steel hex head screw, coupled with a steel nut.

Special requests:

Upon request and for a minimum of 20 pieces, the wheel can be supplied with a needle roller cage, (replace code no. R209 with code no. R239).

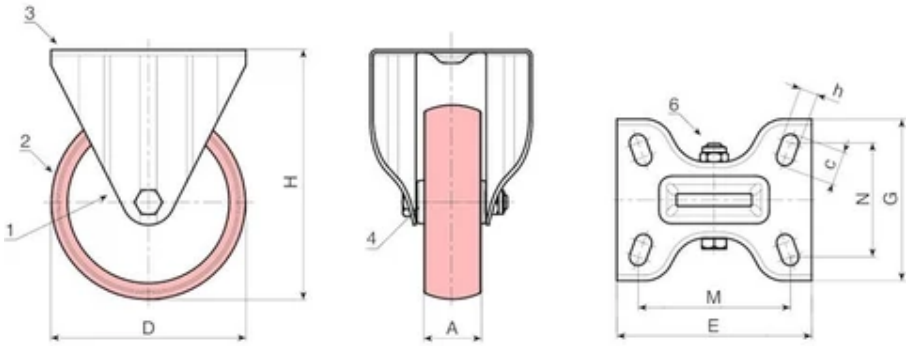

Code	art.	D	A	H	E	G	M	N	c	h	Weight (g)	F1 (Kg)
R209080.0001	R209080.T30P080X060	80	30	108	100	84	80	60	12	9	379	100
R209100.0001	R209100.T30P080X060	100	30	127	100	84	80	60	12	9	436	130
R209125.0001	R209125.T35P080X060	125	35	155	100	84	80	60	12	9	685	180
R209150.0001	R209150.T40P080X060	150	40	184	100	84	80	60	12	9	577	140
R209200.0001	R209200.T50P105X080	200	50	240	135	110	105	80	23	11	1686	300

R209CIN

INOX | max 4 Km/h | +60° -20° | PA6 | PU | RoHS COMPLIANT

18 POLYAMIDE / POLYURETHANE WHEEL WITH RIGID STAINLESS STEEL FORK

Ruote in Nylon/Poliuretano



Materials:

Wheel body (1):

Polyamide. Resistant to oils and greases.

Tread (2):

Injected polyurethane. Hardness 60 ± 5 Shore D.

Surface finish:

Smooth.

Colour:

(1) Natural white.

(2) Red (Ral 3013).

(3-4-6) Natural stainless steel.

Wheel rotation (4):

The hole for the pivot pin is formed by plastic moulding. A stainless steel (Aisi 304) tube is positioned between the stud and the hole for protection.

Bracket (3):

Rigid stainless steel (Aisi 304) fork, with mounting holes in the base.

Wheel fastening (6):

Stainless steel (Aisi 304) hex head bolt, coupled with a stainless steel (Aisi 304) nut.

Special requests:

Upon request and for a minimum of 20 pieces, the wheel can be supplied with a needle roller cage, (replace code no. R209CIN with code no. R239CIN).

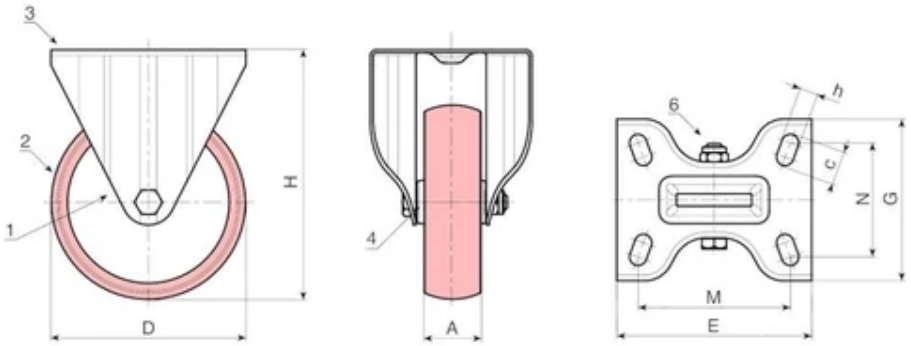

Code	art.	D	A	H	E	G	M	N	c	h	Weight (g)	F1 (Kg)
R209080.0002	R209080.T30P080X060CIN	80	30	108	100	84	80	60	12	9	379	100
R209100.0002	R209100.T30P080X060CIN	100	30	127	100	84	80	60	12	9	394	130
R209125.0002	R209125.T35P080X060CIN	125	35	155	100	84	80	60	12	9	550	180
R209150.0002	R209150.T40P080X060CIN	150	40	184	100	84	80	60	12	9	529	140
R209200.0002	R209200.T50P105X080CIN	200	50	240	135	110	105	80	23	11	1686	300

R250

max 4 Km/h | +60° -20° | PA6 | PU | RoHS COMPLIANT

18 WHEEL WITH POLYAMIDE BODY AND INJECTED POLYURETHANE TREAD WITH BALL BEARINGS WITHOUT RIG (HEAVY DUTY SERIES)

Ruote in Nylon/Poliuretano



Materials:

Wheel body:

Polyamide. Resistant to oils and greases.

Tread:

Injected polyurethane. Hardness 60 ± 5 Shore D.

Surface finish:

Smooth.

Colour:

Body:

Natural white.

Tread:

Red (Ral 3013).

Wheel rotation:

(1) A pair of steel ball bearings is inserted in the wheel hub to provide excellent rollability under a heavy load.

Special requests:

Upon request and for a minimum of 20 pieces, the wheel can be supplied with a needle roller cage, (replace code no. R250 with code no. R240).

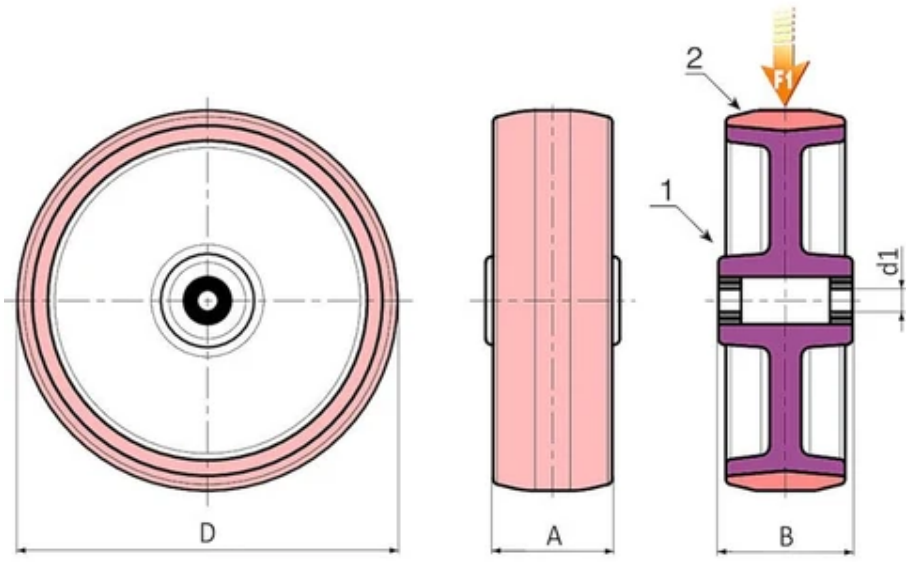

Code	art.	D	A	B	d1	Weight (g)	F1 (Kg)
R250080.0001	R250080.T34D12	80	34	40	12	-	260
R250100.0001	R250100.T40D15	100	40	44	15	-	300
R250125.0001	R250125.T40D15	125	40	45	15	-	400
R250150.0001	R250150.T45D20	150	45	58	20	-	600
R250200.0001	R250200.T50D20	200	50	58	20	-	750

R257

max 4 Km/h | +60° -20° | PA6 | PU | RoHS COMPLIANT

18 POLYAMIDE / POLYURETHANE WHEEL WITH RECTANGULAR SWIVEL PLATE AND STEEL BEARINGS (HEAVY DUTY SERIES)

Ruote in Nylon/Poliuretano



Materials:

Wheel body (1):

Polyamide. Resistant to oils and greases.

Tread (2):

Injected polyurethane. Hardness 60 ± 5 Shore D.

Surface finish:

Smooth.

Colour:

(1) Natural white.

(2) Red (Ral 3013).

(3-4-5-6) Galvanised blue.

Wheel rotation (4):

A pair of steel ball bearings is inserted in the wheel hub to provide excellent rollability.

Bracket (3):

Extra-thick steel (DD13) fork.

Rotating assembly (5):

Steel rotating assembly with double ball race, assembled with steel screw grade 8.8 and rectangular swivel plate with four slotted mounting holes.

Wheel fastening (6):

Steel hex head screw, coupled with a self-locking steel nut.

Special requests:

Upon request and for a minimum of 20 pieces, the wheel can be supplied with a needle roller cage, (replace code no. R257 with code no. R247).

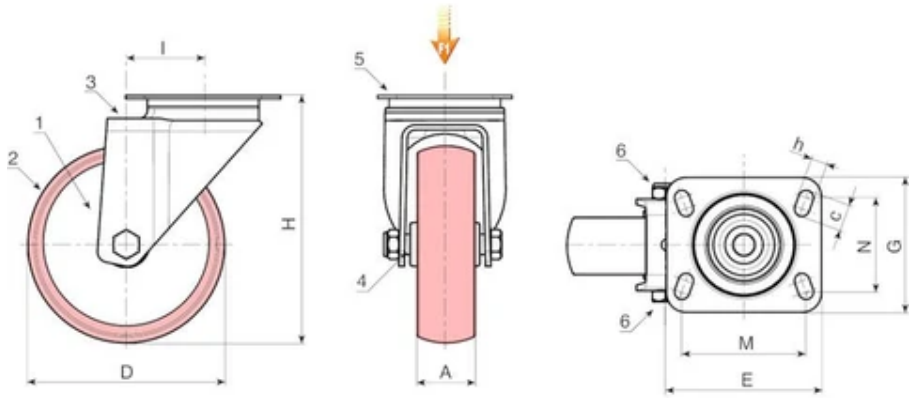

Code	art.	D	A	H	I	E	G	M	N	c	h	Weight (g)	F1 (Kg)
R257080.0001	R257080.T34P080X060	80	34	108	47	100	84	80	60	12	9	-	260
R257100.0001	R257100.T40P080X060	100	40	130	47	100	84	80	60	12	9	-	300
R257125.0001	R257125.T40P080X060	125	40	156,5	51	100	84	80	60	12	9	-	400
R257150.0001	R257150.T45P105X080	150	45	195	60	132	110	105	80	23	12	-	600
R257200.0001	R257200.T50P105X080	200	50	242	59	132	110	105	80	23	12	-	700

R258

max 4 Km/h | +60° -20° | PA6 | PU | RoHS COMPLIANT

18 POLYAMIDE / POLYURETHANE WHEEL WITH RECTANGULAR SWIVEL STEEL PLATE WITH BRAKE AND BEARINGS (HEAVY DUTY SERIES)

Ruote in Nylon/Poliuretano



Materials:

Wheel body (1):

Polyamide. Resistant to oils and greases.

Tread (2):

Injected polyurethane. Hardness 60 ± 5 Shore D.

Surface finish:

Smooth.

Colour:

(1) Natural white.

(2) Red (Ral 3013).

(3-4-5-6) Galvanised blue.

Wheel rotation (4):

A pair of steel ball bearings is inserted in the wheel hub to provide excellent rollability.

Bracket (3):

Extra-thick steel (DD13) fork, with integrated brake.

Rotating assembly (5):

Steel rotating assembly with double ball race, assembled with steel screw grade 8.8 and rectangular swivel plate with four slotted mounting holes.

Wheel fastening (6):

Steel hex head screw, coupled with a self-locking steel nut.

Special requests:

Upon request and for a minimum of 20 pieces, the wheel can be supplied with a needle roller cage, (replace code no. R258 with code no. R248).

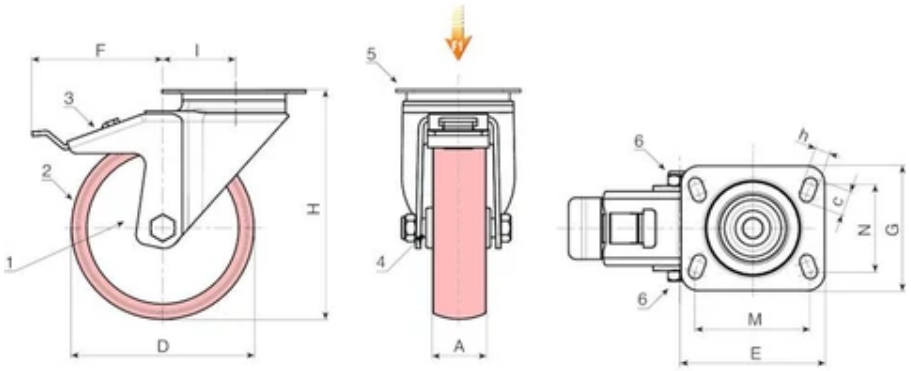

Code	art.	D	A	H	I	E	G	M	N	c	h	F	Weight (g)	F1 (Kg)
R258080.0001	R258080.T34P080X060	80	34	125	47	100	84	80	60	12	9	113	-	260
R258100.0001	R258100.T40P080X060	100	40	135	47	100	84	80	60	12	9	114	-	300
R258125.0001	R258125.T40P080X060	125	40	161	51	100	84	80	60	12	9	128	-	400
R258150.0001	R258150.T45P105X080	150	45	195	60	132	110	105	80	23	12	157	-	600
R258200.0001	R258200.T50P105X080	200	50	242	59	132	110	105	80	23	12	158	-	700

R259

max 4 Km/h | +60° -20° | PA6 | PU | RoHS COMPLIANT

18 POLYAMIDE / POLYURETHANE WHEEL WITH RIGID STEEL FORK AND STEEL BEARINGS (HEAVY DUTY SERIES)

Ruote in Nylon/Poliuretano



Materials:

Wheel body (1):

Polyamide. Resistant to oils and greases.

Tread (2):

Injected polyurethane. Hardness 60 ± 5 Shore D.

Surface finish:

Smooth.

Colour:

(1) Natural white.

(2) Red (Ral 3013).

(3-4-5-6) Galvanised blue.

Wheel rotation (4):

A pair of steel ball bearings is inserted in the wheel hub to provide excellent rollability.

Bracket (3):

Extra-thick steel (DD13) fork, with mounting holes in the base.

Wheel fastening (6):

Steel hex head screw, coupled with a self-locking steel nut.

Special requests:

Upon request and for a minimum of 20 pieces, the wheel can be supplied with a needle roller cage, (replace code no. R259 with code no. R249).

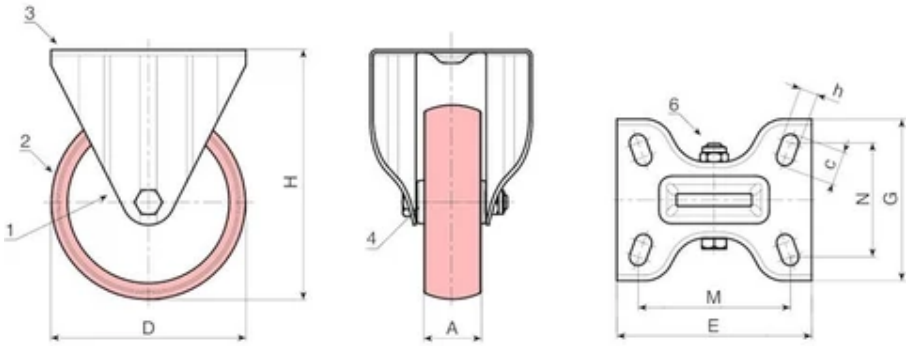

Code	art.	D	A	H	E	G	M	N	c	h	Weight (g)	F1 (Kg)
R259080.0001	R259080.T34P080X060	80	34	125	100	88	80	60	12	9	-	260
R259100.0001	R259100.T40P080X060	100	40	135	100	88	80	60	12	9	-	300
R259125.0001	R259125.T40P080X060	125	40	161	100	88	80	60	12	9	-	400
R259150.0001	R259150.T45P105X080	150	45	195	134	114	105	80	23	12	-	600
R259200.0001	R259200.T50P105X080	200	50	242	134	114	105	80	23	12	-	700

R270

max 4 Km/h | +60° -20° | Al | PU | RoHS COMPLIANT

18 WHEEL WITH ALUMINIUM BODY AND MOULD-ON POLYURETHANE TREAD WITH BALL BEARINGS WITHOUT RIG

Ruote in Nylon/Poliuretano



Materials:

Wheel body:

Die-cast aluminium alloy.

Tread:

Mould-on polyurethane. Hardness 94 ± 2 Shore A.

Surface finish:

Smooth.

Colour:

Body:

Natural aluminium.

Tread:

Light brown.

Wheel rotation:

(1) A pair of steel ball bearings is inserted in the wheel hub to provide excellent rollability under a heavy load.

Special requests:

None.

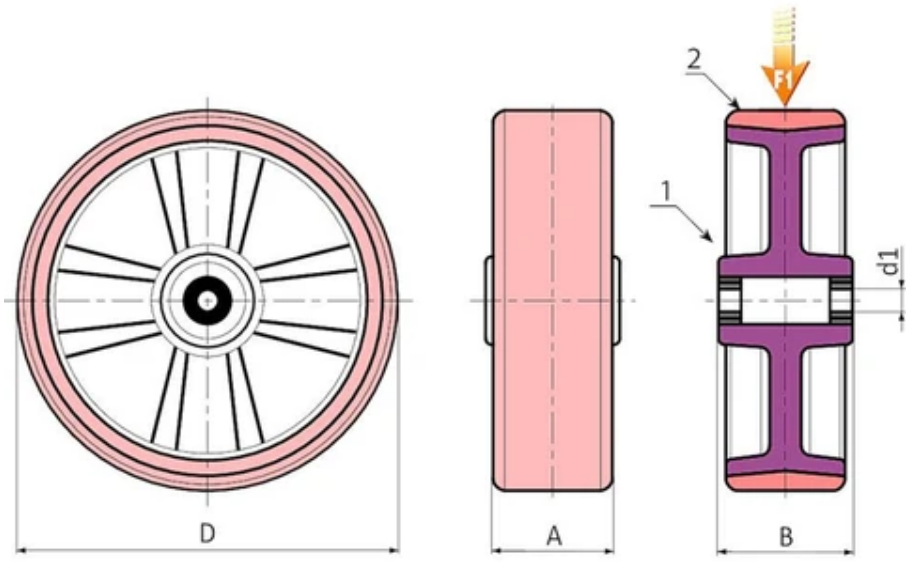

Code	art.	D	A	B	d1	Weight (g)	F1 (Kg)
R270080.0001	R270080.T25D12	80	25	30	12	-	150
R270100.0001	R270100.T30D15	100	30	30	15	-	200
R270125.0001	R270125.T30D15	125	30	40	15	-	250
R270150.0001	R270150.T40D17	150	40	45	17	-	400
R270200.0001	R270200.T50D25	200	50	60	25	-	750

R277

max 4 Km/h | +60° -20° | Al | PU | RoHS COMPLIANT

18 ALUMINIUM / POLYURETHANE WHEEL WITH RECTANGULAR SWIVEL PLATE AND STEEL BEARINGS

Ruote in Nylon/Poliuretano



Materials:

Wheel body (1):

Die-cast aluminium alloy.

Tread (2):

Mould-on polyurethane. Hardness 94 ± 2 Shore A.

Surface finish:

Smooth.

Colour:

(1) Natural aluminium.

(2) Light brown.

(3-4-5-6) Galvanised blue.

Wheel rotation (4):

A pair of steel ball bearings is inserted in the wheel hub to provide excellent rollability.

Bracket (3):

Extra-thick steel (DD13) fork.

Rotating assembly (5):

Steel rotating assembly with double ball race, assembled with steel screw grade 8.8 and rectangular swivel plate with four slotted mounting holes.

Wheel fastening (6):

Steel hex head screw, coupled with a self-locking steel nut.

Special requests:

None.

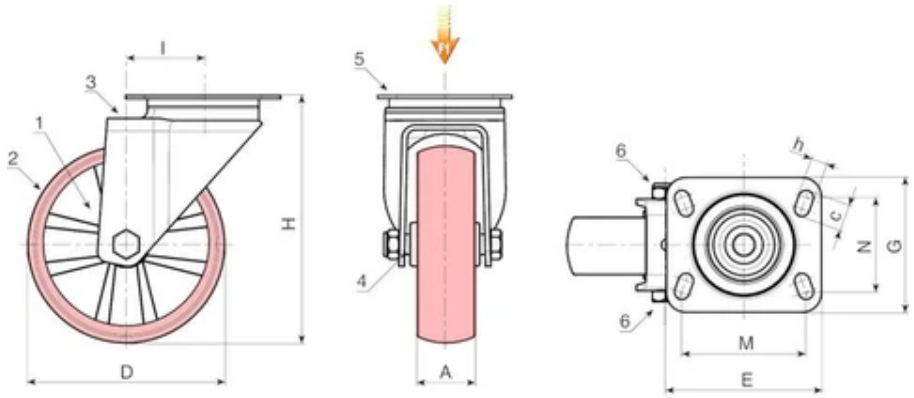

Code	art.	D	A	H	I	E	G	M	N	c	h	Weight (g)	F1 (Kg)
R277080.0001	R277080.T25P080X060	80	25	108	32	100	80	80	60	12	9	-	150
R277100.0001	R277100.T30P080X060	100	30	127	33	100	80	80	60	12	9	-	180
R277125.0001	R277125.T30P080X060	125	30	155	39	100	80	80	60	12	9	-	180
R277150.0001	R277150.T40P105X080	150	40	186	47	133	106	105	80	23	11	-	300
R277200.0001	R277200.T50P105X080	200	50	240	56	132	110	105	80	23	12	-	300

R278

max 4 Km/h | +60° -20° | Al | PU | RoHS COMPLIANT

18 ALUMINIUM / POLYURETHANE WHEEL WITH RECTANGULAR SWIVEL STEEL PLATE - WITH BRAKE AND BEARINGS

Ruote in Nylon/Poliuretano



Materials:

Wheel body (1):

Die-cast aluminium alloy.

Tread (2):

Mould-on polyurethane. Hardness 94 ± 2 Shore A.

Surface finish:

Smooth.

Colour:

(1) Natural aluminium.

(2) Light brown.

(3-4-5-6) Galvanised blue.

Wheel rotation (4):

A pair of steel ball bearings is inserted in the wheel hub to provide excellent rollability.

Bracket (3):

Extra-thick steel (DD13) fork, with integrated brake.

Rotating assembly (5):

Steel rotating assembly with double ball race, assembled with steel screw grade 8.8 and rectangular swivel plate with four slotted mounting holes.

Wheel fastening (6):

Steel hex head screw, coupled with a self-locking steel nut.

Special requests:

None.

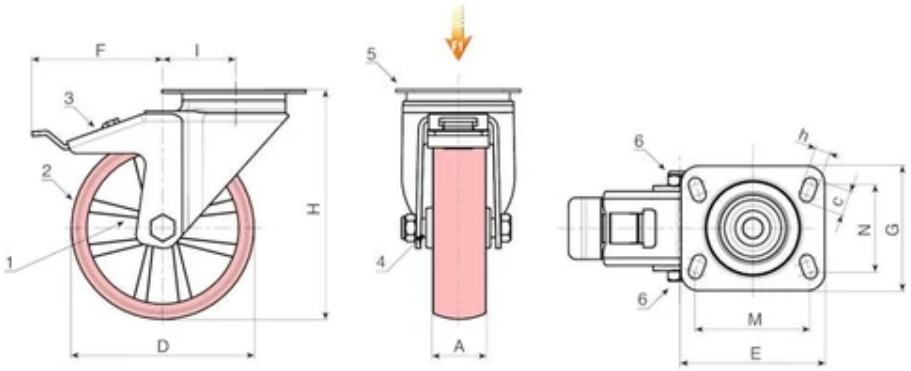

Code	art.	D	A	H	I	E	G	M	N	c	h	F	Weight (g)	F1 (Kg)
R278080.0001	R278080.T25P080X060	80	25	108	32	100	80	80	60	12	9	114	-	150
R278100.0001	R278100.T30P080X060	100	30	127	33	100	80	80	60	12	9	117	-	180
R278125.0001	R278125.T30P080X060	125	30	155	39	100	80	80	60	12	9	123	-	180
R278150.0001	R278150.T40P105X080	150	40	186	47	133	106	105	80	23	12	144	-	300
R278200.0001	R278200.T50P105X080	200	50	240	56	132	110	105	80	23	12	157	-	300

R279

max 4 Km/h | +60° -20° | Al | PU | RoHS COMPLIANT

18 ALUMINIUM / POLYURETHANE WHEEL WITH RIGID STEEL FORK AND STEEL BEARINGS

Ruote in Nylon/Poliuretano



Materials:

Wheel body (1):

Die-cast aluminium alloy.

Tread (2):

Mould-on polyurethane. Hardness 94 ± 2 Shore A.

Surface finish:

Smooth.

Colour:

(1) Natural aluminium.

(2) Light brown.

(3-4-5-6) Galvanised blue.

Wheel rotation (4):

A pair of steel ball bearings is inserted in the wheel hub to provide excellent rollability.

Bracket (3):

Extra-thick steel (DD13) fork, with mounting holes in the base.

Wheel fastening (6):

Steel hex head screw, coupled with a self-locking steel nut.

Special requests:

None.

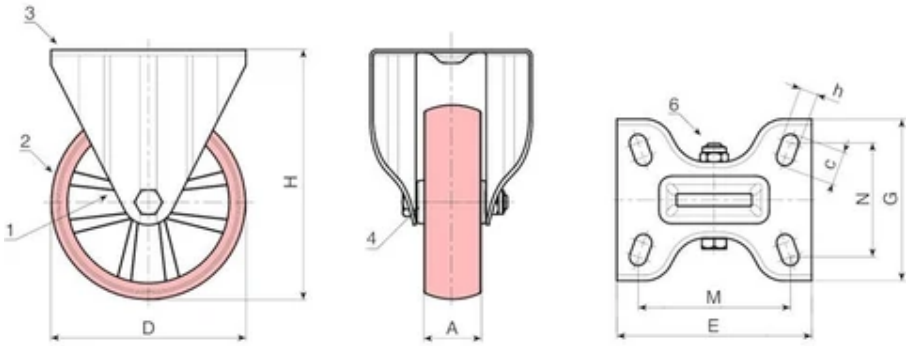

Code	art.	D	A	H	E	G	M	N	c	h	Weight (g)	F1 (Kg)
R279080.0001	R279080.T25P080X060	80	25	108	100	84	80	60	12	9	-	150
R279100.0001	R279100.T30P080X060	100	30	127	100	84	80	60	12	9	-	180
R279125.0001	R279125.T30P080X060	125	30	155	100	84	80	60	12	9	-	180
R279150.0001	R279150.T40P105X080	150	40	184	134	110	105	80	23	11	-	220
R279200.0001	R279200.T50P105X080	200	50	240	135	110	105	80	23	11	-	300

R300

max 4 Km/h | +60° -20° | NR | DD13 | RoHS✓ COMPLIANT

18 WHEEL WITH SHEET METAL RIM AND RUBBER TREAD (WITHOUT RIG)

Ruote in Lamiera/Gomma Naturale



Materials:

Wheel body:

Two stamped sheet metal disks (steel DD13) riveted together to create a single body.

Tread:

Natural rubber trapezoidal tread. Hardness 85 ± 4 Shore A.

Surface finish:

Smooth.

Colour:

Body:

Galvanised blue.

Tread:

Black (Ral 9011).

Wheel rotation:

The hole for the pivot pin is stamped in sheet metal. A black polyamide insert is positioned between the pin and the hole for protection.

Special requests:

Upon request and for a minimum of 20 pieces, the wheel can be supplied with a needle roller cage, (replace code no. R300 with code no. R330).

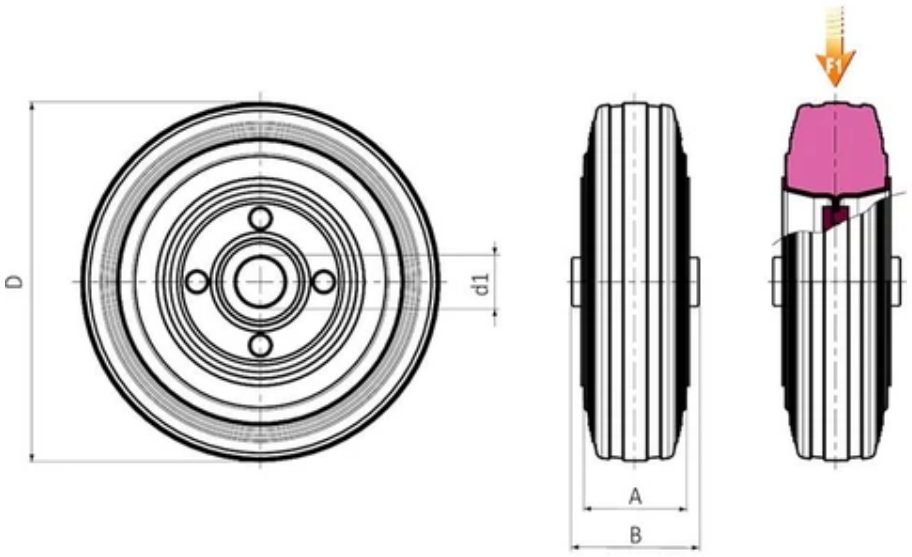

Code	art.	D	A	B	d1	Weight (g)	F1 (Kg)
R300080.0001	R300080.T25D12	80	25	39	12	-	50
R300100.0001	R300100.T30D12	100	30	39	12	-	70
R300125.0001	R300125.T37D15	125	37.5	44	15	-	110
R300140.0001	R300140.T37D15	140	37.5	44	15	-	140
R300150.0001	R300150.T37D15	150	37.5	44	15	-	140
R300160.0001	R300160.T40D20	160	40	45	20	-	160
R300180.0001	R300180.T45D20	180	45	58	20	-	180
R300200.0001	R300200.T50D20	200	50	58	20	-	220

R301

max 4 Km/h | +60° -20° | NR | DD13 | RoHS COMPLIANT

18 SHEET METAL RIM / RUBBER WHEEL WITH ROUND STEEL SWIVEL SUPPORT AND SMOOTH THROUGH HOLE

Ruote in Lamiera/Gomma Naturale



Materials:

Wheel body:

Two stamped sheet metal disks (steel DD13) riveted together to create a single body.

Tread:

Natural rubber trapezoidal tread. Hardness 85 ± 4 Shore A.

Surface finish:

Smooth.

Colour:

(2) Black (RAL 9011).

(1-3-4-5-6) Galvanised blue.

Wheel rotation:

The hole for the pivot pin is stamped in sheet metal. A black polyamide insert is positioned between the pin and the hole for protection.

Bracket (3):

Steel fork (DD13).

Rotating assembly (5):

Steel rotating assembly with double ball race and smooth fixing hole, (hole tolerance H7).

Wheel fastening (6):

Steel hex head screw, coupled with a steel nut.

Special requests:

Upon request and for a minimum of 20 pieces, the wheel can be supplied with a needle roller cage, (replace code no. R301 with code no. R331).

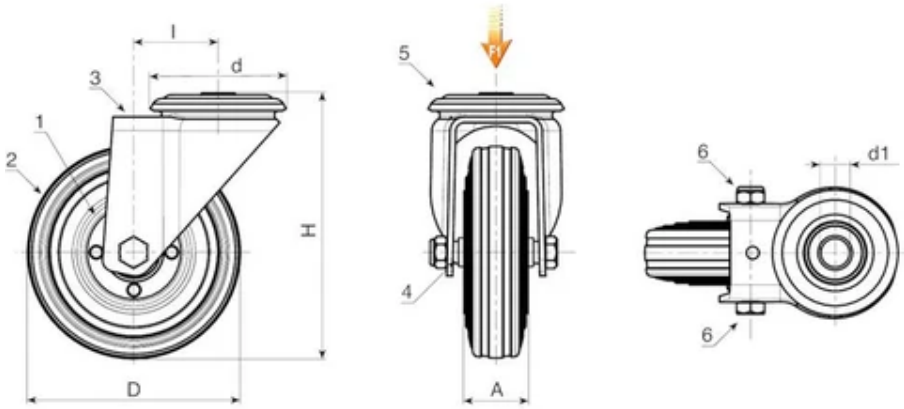

Code	art.	D	A	H	l	d	d1 H7	Weight (g)	F1 (Kg)
R301080.0001	R301080.T25D12	80	25	108	32	64	12	550	50
R301100.0001	R301100.T30D12	100	30	127	32	64	12	672	70
R301125.0001	R301125.T37D12	125	37.5	155	32	64	12	741	100
R301150.0001	R301150.T37D12	150	37.5	183	35	65	12	-	140
R301180.0001	R301180.T45D16	180	45	230	48	95	16	-	180
R301200.0001	R301200.T50D16	200	50	240	48	95	16	2919	200

R302

max 4 Km/h | +60° -20° | NR | DD13 | RoHS✓ COMPLIANT

18 SHEET METAL RIM / RUBBER WHEEL WITH ROUND STEEL SWIVEL SUPPORT AND SMOOTH THROUGH HOLE WITH BRAKE

Ruote in Lamiera/Gomma Naturale



Materials:

Wheel body:

Two stamped sheet metal disks (steel DD13) riveted together to create a single body.

Tread:

Natural rubber trapezoidal tread. Hardness 85 ± 4 Shore A.

Surface finish:

Smooth.

Colour:

(2) Black (RAL 9011).

(1-3-4-5-6) Galvanised blue.

Wheel rotation:

The hole for the pivot pin is stamped in sheet metal. A black polyamide insert is positioned between the pin and the hole for protection.

Bracket (3):

Steel fork (DD13), with integrated brake.

Rotating assembly (5):

Steel rotating assembly with double ball race and smooth fixing hole, (hole tolerance H7).

Wheel fastening (6):

Steel hex head screw, coupled with a steel nut.

Special requests:

Upon request and for a minimum of 20 pieces, the wheel can be supplied with a needle roller cage, (replace code no. R302 with code no. R332).

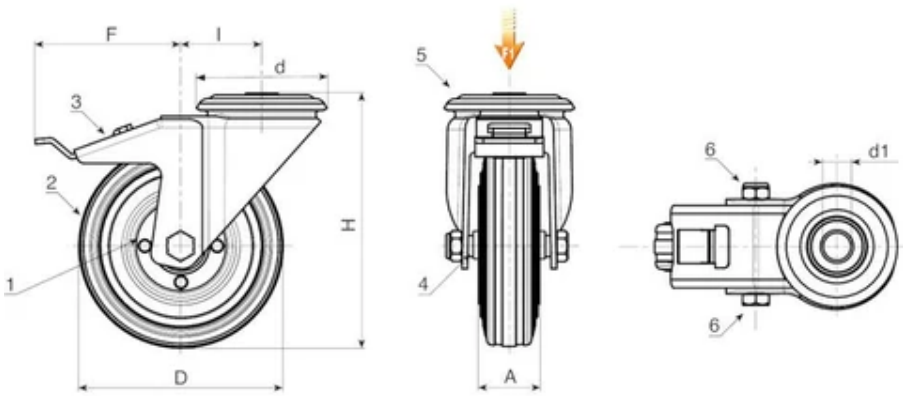

Code	art.	D	A	H	l	d	d1 H7	F	Weight (g)	F1 (Kg)
R302080.0001	R302080.T25D12	80	25	108	32	64	12	110	570	50
R302100.0001	R302100.T30D12	100	30	127	32	64	12	110	618	70
R302125.0001	R302125.T37D12	125	37.5	155	32	64	12	113	1134	100
R302150.0001	R302150.T37D12	150	37.5	183	35	65	12	115	-	140
R302180.0001	R302180.T45D16	180	45	230	48	95	16	150	-	180
R302200.0001	R302200.T50D16	200	50	240	48	95	16	150	3297	200

R307

max 4 Km/h | +60° -20° | NR | DD13 | RoHS✓ COMPLIANT

18 SHEET METAL RIM / RUBBER WHEEL WITH RECTANGULAR SWIVEL STEEL PLATE

Ruote in Lamiera/Gomma Naturale



Materials:

Wheel body:

Two stamped sheet metal disks (steel DD13) riveted together to create a single body.

Tread:

Natural rubber trapezoidal tread. Hardness 85 ± 4 Shore A.

Surface finish:

Smooth.

Colour:

(2) Black (RAL 9011).

(1-3-4-5-6) Galvanised blue.

Wheel rotation:

The hole for the pivot pin is stamped in sheet metal. A black polyamide insert is positioned between the pin and the hole for protection.

Bracket (3):

Steel fork (DD13).

Rotating assembly (5):

Steel rotating assembly with double ball race, and rectangular swivel plate with four slotted mounting holes.

Wheel fastening (6):

Steel hex head screw, coupled with a steel nut.

Special requests:

Upon request and for a minimum of 20 pieces, the wheel can be supplied with a needle roller cage, (replace code no. R307 with code no. R337).

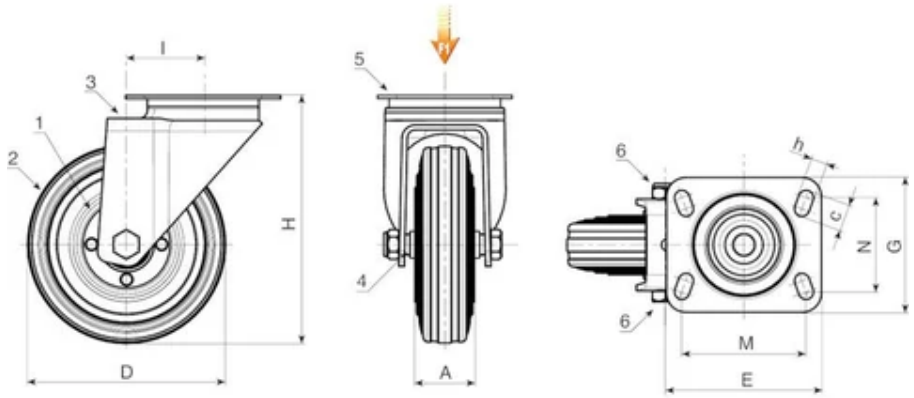

Code	art.	D	A	H	I	E	G	M	N	c	h	Weight (g)	F1 (Kg)
R307080.0001	R307080.T25P080X060	80	25	108	32	95	80	80	60	12	9	550	50
R307100.0001	R307100.T30P080X060	100	30	127	32	95	80	80	60	12	9	660	70
R307125.0001	R307125.T37P080X060	125	37.5	155	32	95	80	80	60	12	9	968	100
R307150.0001	R307150.T37P080X060	150	37.5	183	35	100	80	80	60	12	9	-	140
R307180.0001	R307180.T45P105X080	180	45	230	48	129	106	105	80	23	11	2371	180
R307200.0001	R307200.T50P105X080	200	50	240	48	129	106	105	80	23	11	2736	220

R308

max 4 Km/h | +60° -20° | NR | DD13 | RoHS✓ COMPLIANT

18 SHEET METAL RIM / RUBBER WHEEL WITH RECTANGULAR SWIVEL STEEL PLATE WITH BRAKE

Ruote in Lamiera/Gomma Naturale



Materials:

Wheel body:

Two stamped sheet metal disks (steel DD13) riveted together to create a single body.

Tread:

Natural rubber trapezoidal tread. Hardness 85 ± 4 Shore A.

Surface finish:

Smooth.

Colour:

(2) Black (RAL 9011).

(1-3-4-5-6) Galvanised blue.

Wheel rotation:

The hole for the pivot pin is stamped in sheet metal. A black polyamide insert is positioned between the pin and the hole for protection.

Bracket (3):

Steel fork (DD13), with integrated brake.

Rotating assembly (5):

Steel rotating assembly with double ball race, and rectangular swivel plate with four slotted mounting holes.

Wheel fastening (6):

Steel hex head screw, coupled with a steel nut.

Special requests:

Upon request and for a minimum of 20 pieces, the wheel can be supplied with a needle roller cage, (replace code no. R308 with code no. R338).

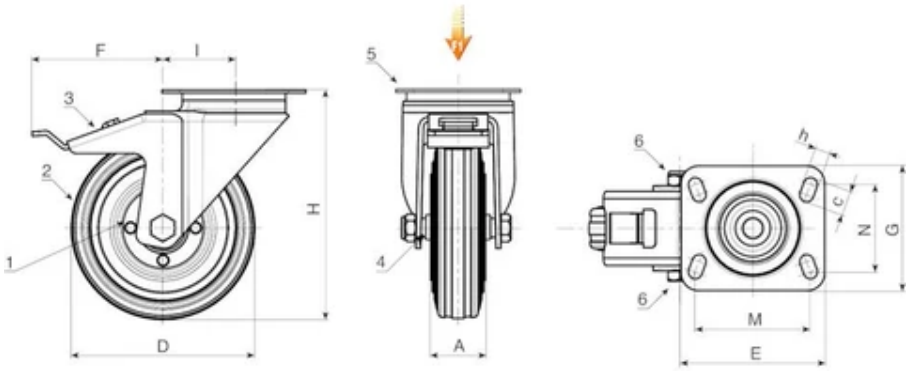

Code	art.	D	A	H	I	E	G	M	N	c	h	F	Weight (g)	F1 (Kg)
R308080.0001	R308080.T25P080X060	80	25	108	32	95	80	80	60	12	9	110	669	50
R308100.0001	R308100.T30P080X060	100	30	127	32	95	80	80	60	12	9	110	782	70
R308125.0001	R308125.T37P080X060	125	37.5	155	32	95	80	80	60	12	9	113	1086	100
R308150.0001	R308150.T37P080X060	150	37.5	183	35	100	80	80	60	12	9	115	-	140
R308180.0001	R308180.T45P105X080	180	45	230	48	129	106	105	80	23	11	150	3068	180
R308200.0001	R308200.T50P105X080	200	50	240	48	129	106	105	80	23	11	150	2860	220

R309

max 4 Km/h | +60° -20° | NR | DD13 | RoHS✓ COMPLIANT

18

SHEET METAL RIM / RUBBER WHEEL WITH RIGID STEEL FORK

Ruote in Lamiera/Gomma Naturale



Materials:

Wheel body:

Two stamped sheet metal disks (steel DD13) riveted together to create a single body.

Tread:

Natural rubber trapezoidal tread. Hardness 85 ± 4 Shore A.

Surface finish:

Smooth.

Colour:

(2) Black (RAL 9011).

(1-3-4-6) Galvanised blue.

Wheel rotation:

The hole for the pivot pin is stamped in sheet metal. A black polyamide insert is positioned between the pin and the hole for protection.

Bracket (3):

Steel (DD13) fork, with mounting holes in the base.

Wheel fastening (6):

Steel hex head screw, coupled with a steel nut.

Special requests:

Upon request and for a minimum of 20 pieces, the wheel can be supplied with a needle roller cage, (replace code no. R309 with code no. R339).

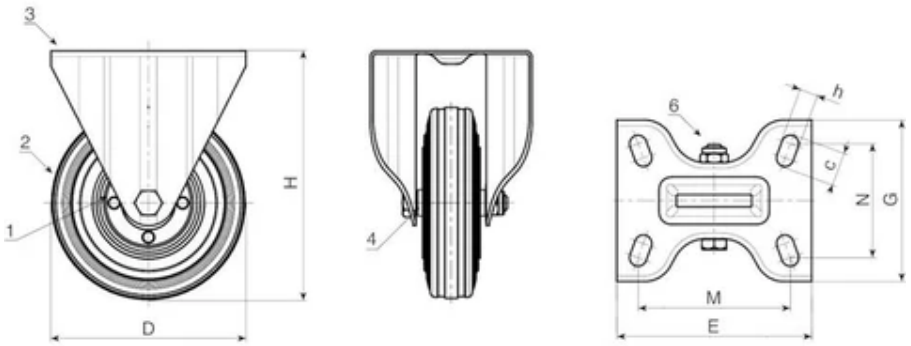

Code	art.	D	A	H	E	G	M	N	c	h	Weight (g)	F1 (Kg)
R309080.0001	R309080.T25P080X060	80	25	108	102	84	80	60	12	9	-	50
R309100.0001	R309100.T30P080X060	100	30	127	102	84	80	60	12	9	-	70
R309125.0001	R309125.T37P080X060	125	37.5	155	100	84	80	60	12	9	-	100
R309150.0001	R309150.T37P080X060	150	37.5	183	100	84	80	60	12	9	-	140
R309180.0001	R309180.T45P105X080	180	45	230	135	110	105	80	23	11	-	180
R309200.0001	R309200.T50P105X080	200	50	240	135	110	105	80	23	11	-	220

R400

max 3 Km/h | +50° - 5° | PP | TPE | RoHS COMPLIANT

18 WHEEL WITH POLYPROPYLENE BODY AND THERMOPLASTIC RUBBER TREAD (WITHOUT RIG)

Ruote in PP/Gomma sintetica (Colletività)



Materials:
Wheel body:
Polypropylene.
Tread:
Synthetic thermoplastic rubber. Hardness 93 ± 3 Shore A.

Surface finish:
Smooth.

Colour:
Body:
Black (Ral 9011).
Tread:
Light grey.

Wheel rotation:
The hole for the pivot pin is formed by plastic moulding.

Special requests:
None.

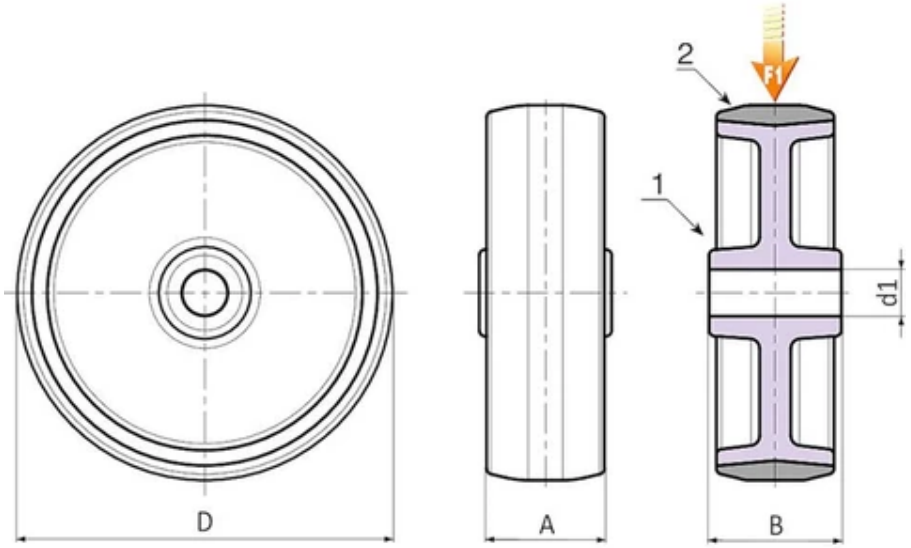

Code	art.	D	A	B	d1	Weight (g)	F1 (Kg)
R400050.0001	R400050.T18D08	50	18	22	8	-	40
R400063.0001	R400063.T22D10	63	22	27	10	-	60
R400075.0001	R400075.T24D08	75	24	27	8	-	60
R400075.0001	R400080.T22D10	80	22	27	10	-	60
R400100.0001	R400100.T27D12	100	27	32	12	-	80
R400125.0001	R400125.T27D12	125	27	32	12	-	80

R401

max 3 Km/h | +50° - 5° | PP | TPE | RoHS COMPLIANT

18 POLYPROPYLENE / RUBBER WHEEL WITH ROUND STEEL SWIVEL SUPPORT AND SMOOTH THROUGH HOLE

Ruote in PP/Gomma sintetica (Colletività)



Materials:

Wheel body:

Polypropylene.

Tread:

Synthetic thermoplastic rubber. Hardness 93 ± 3 Shore A.

Surface finish:

Smooth.

Colour:

(1) Black (RAL 9011).

(2) Light grey.

(3-4-5-6-7) Galvanised blue.

Wheel rotation (4):

The hole for the pivot pin is formed by plastic moulding. A galvanised steel tube is positioned between the stud and the hole for protection.

Bracket (3):

Steel fork (DD13).

Rotating assembly (5):

Steel rotating assembly with double ball race and smooth fixing hole, (hole tolerance H7).

Wheel fastening (6):

Steel hex head screw, coupled with a steel nut.

Thread guards (7):

Sheared steel thread guard disk fixed on both sides.

Special requests:

None.

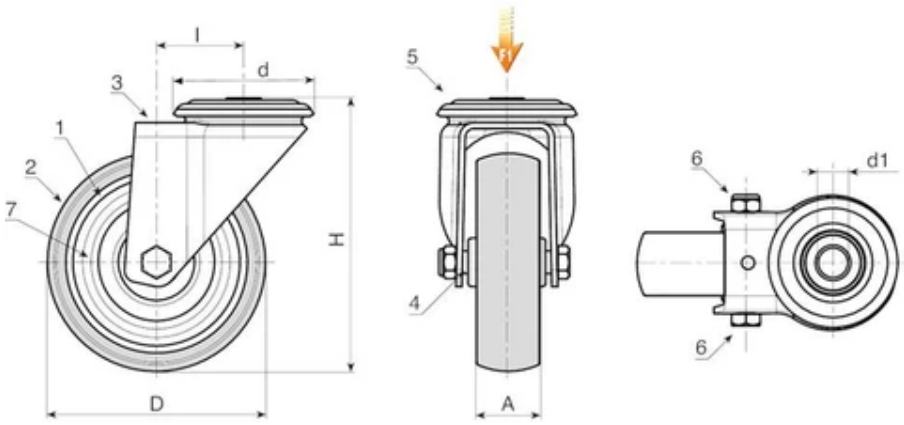

Code	art.	D	A	H	l	d	d1 H7	Weight (g)	F1 (Kg)
R401050.0001	R401050.T18D12	50	18	70	26	48	12	-	40
R401063.0001	R401063.T22D12	63	22	90	26	48	12	-	60
R401080.0001	R401080.T22D12	80	22	109	25	48	12	-	60
R401100.0001	R401100.T27D12	100	27	134	36	57	12	-	80
R401125.0001	R401125.T27D12	125	27	159	35	57	12	-	80

R402

max 3 Km/h | +50° - 5° | PP | TPE | RoHS COMPLIANT

18 POLYPROPYLENE / RUBBER WHEEL WITH ROUND STEEL SWIVEL SUPPORT AND SMOOTH THROUGH HOLE WITH BRAKE

Ruote in PP/Gomma sintetica (Colletività)





Materiali:

Corpo ruota:

Polipropilene.

Battistrada:

Gomma termoplastica sintetica. Durezza 93 ± 3 Shore A.

Superficie:

Liscia.

Colore:

(1) Nero (Ral 9011).

(2) Grigio chiaro.

(3-4-5-6-7) Blu da zincatura.

Rotazione ruota (4):

Il foro per il perno di rotazione è ricavato per stampaggio nella plastica. Come protezione tra il prigioniero ed il foro è posizionato un tubetto di acciaio zincato.

Staffa (3):

Forcella in acciaio (DD13), con freno integrato. Leva di azionamento del freno stampata in plastica grigia.

Gruppo rotante (5):

Gruppo rotante in acciaio con doppia corona di sfere e foro di fissaggio liscio, (tolleranza foro H7).

Fissaggio ruota (6):

Vite in acciaio con testa esagonale, accoppiata ad un dado in acciaio.

Parafili (7):

Disco parafili in acciaio tranciato fissato da ambo i lati.

Richieste speciali:

Nessuna.

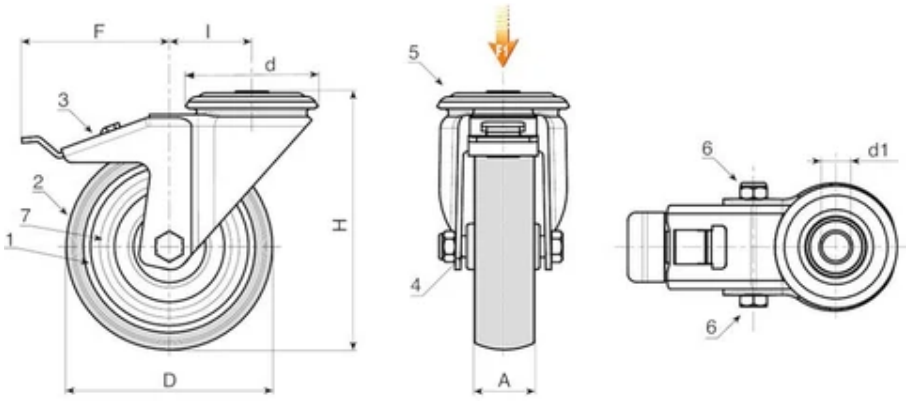

Codice	art.	D	A	H	I	d	F	d1 H7	Peso (g)	F1 (Kg)
R402050.0001	R402050.T18D12	50	18	70	26	48	80	12	-	40
R402063.0001	R402063.T22D12	63	22	90	26	48	84	12	-	60
R402080.0001	R402080.T22D12	80	22	109	25	48	84	12	-	60
R402100.0001	R402100.T27D12	100	27	134	36	57	106	12	-	80
R402125.0001	R402125.T27D12	125	27	159	35	57	106	12	-	80

R403

max 3 Km/h | +50° - 5° | PP | TPE | RoHS COMPLIANT

18 POLYPROPYLENE / RUBBER WHEEL WITH ROUND STEEL SWIVEL SUPPORT AND THREADED STUD

Ruote in PP/Gomma sintetica (Colletività)



Materials:

Wheel body:

Polypropylene.

Tread:

Synthetic thermoplastic rubber. Hardness 93 ± 3 Shore A.

Surface finish:

Smooth.

Colour:

(1) Black (RAL 9011).

(2) Light grey.

(3-4-5-6-7) Galvanised blue.

Wheel rotation (4):

The hole for the pivot pin is formed by plastic moulding. A galvanised steel tube is positioned between the stud and the hole for protection.

Bracket (3):

Steel fork (DD13).

Rotating assembly (5):

Steel rotating assembly with double ball race and threaded stud (thread tolerance 6g).

Wheel fastening (6):

Steel hex head screw, coupled with a steel nut.

Thread guards (7):

Sheared steel thread guard disk fixed on both sides.

Special requests:

With a minimum of 100 pieces, M12 threaded studs can be supplied instead of M10, and vice versa.

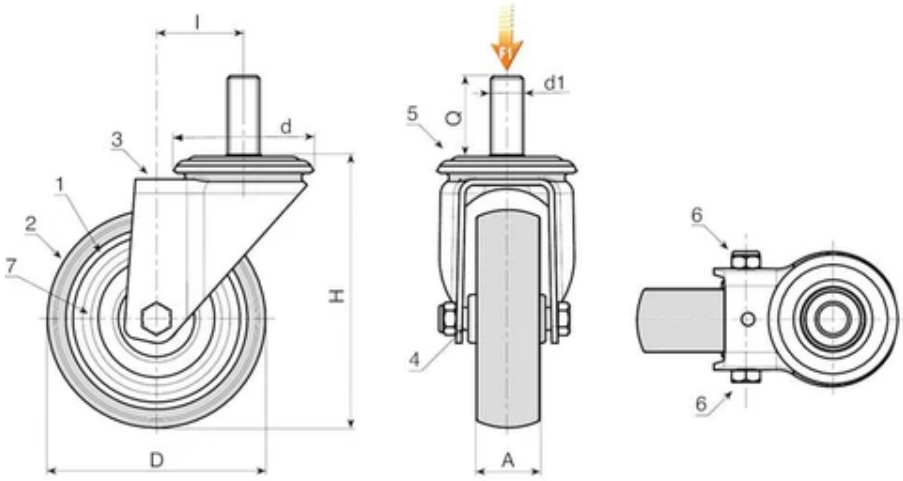

Code	art.	D	A	H	l	d	d1 6g	Q	Weight (g)	F1 (Kg)
R403050.0001	R403050.T18M10X25	50	18	70	26	48	M10	25	-	40
R403063.0001	R403063.T22M10X25	63	22	90	26	48	M10	25	-	60
R403080.0001	R403080.T22M10X25	80	22	109	25	48	M10	25	-	60
R403100.0001	R403100.T27M12X30	100	27	134	36	57	M12	30	-	80
R403125.0001	R403125.T27M12X30	125	27	159	35	57	M12	30	-	80

R404

max 3 Km/h | +50° - 5° | PP | TPE | RoHS COMPLIANT

18 POLYPROPYLENE / RUBBER WHEEL WITH ROUND STEEL SWIVEL SUPPORT AND THREADED STUD WITH BRAKE

Ruote in PP/Gomma sintetica (Colletività)



Materials:

Wheel body:

Polypropylene.

Tread:

Synthetic thermoplastic rubber. Hardness 93 ± 3 Shore A.

Surface finish:

Smooth.

Colour:

(1) Black (RAL 9011).

(2) Light grey.

(3-4-5-6-7) Galvanised blue.

Wheel rotation (4):

The hole for the pivot pin is formed by plastic moulding. A galvanised steel tube is positioned between the stud and the hole for protection.

Bracket (3):

Steel fork (DD13), with integrated brake. Brake actuation lever moulded in grey plastic.

Rotating assembly (5):

Steel rotating assembly with double ball race and threaded stud (thread tolerance 6g).

Wheel fastening (6):

Steel hex head screw, coupled with a steel nut.

Thread guards (7):

Sheared steel thread guard disk fixed on both sides.

Special requests:

With a minimum of 100 pieces, M12 threaded studs can be supplied instead of M10, and vice versa.

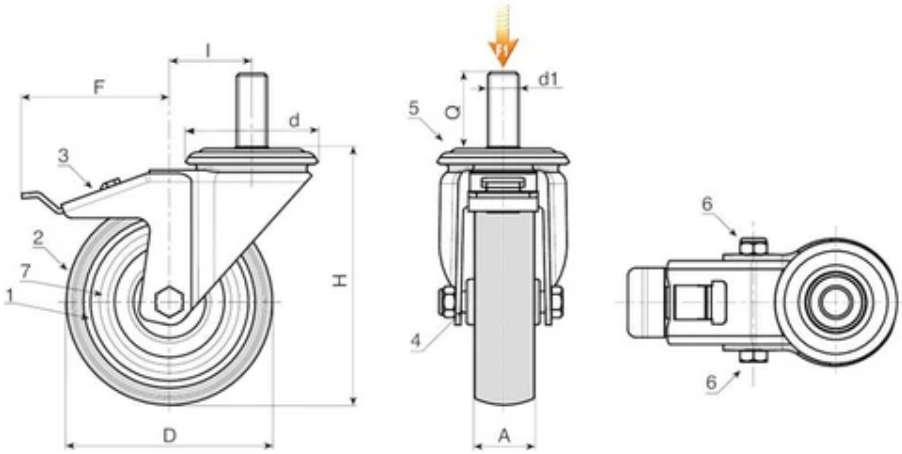

Code	art.	D	A	H	I	d	F	d1 6g	Q	Weight (g)	F1 (Kg)
R404050.0001	R404050.T18M10X25	50	18	70	26	48	80	M10	25	-	40
R404063.0001	R404063.T22M10X25	63	22	90	26	48	84	M10	25	-	60
R404080.0001	R404080.T22M10X25	80	22	109	25	48	84	M10	25	-	60
R404100.0001	R404100.T27M12X30	100	27	134	36	57	106	M12	30	-	80
R404125.0001	R404125.T27M12X30	125	27	159	35	57	106	M12	30	-	80

R407

max 3 Km/h | +50° - 5° | PP | TPE | RoHS COMPLIANT

18 POLYPROPYLENE / RUBBER WHEEL WITH RECTANGULAR SWIVEL STEEL PLATE

Ruote in PP/Gomma sintetica (Colletività)



Materials:
Wheel body:
Polypropylene.
Tread:
Synthetic thermoplastic rubber. Hardness 93 ± 3 Shore A.

Surface finish:
Smooth.

Colour:
(1) Black (RAL 9011).
(2) Light grey.
(3-4-5-6-7) Galvanised blue.

Wheel rotation (4):
The hole for the pivot pin is formed by plastic moulding. A galvanised steel tube is positioned between the stud and the hole for protection.

Bracket (3):
Steel fork (DD13).

Rotating assembly (5):
Steel rotating assembly with double ball race, and rectangular swivel plate with four slotted mounting holes.

Wheel fastening (6):
Steel hex head screw, coupled with a steel nut.

Thread guards (7):
Sheared steel thread guard disk fixed on both sides.

Special requests:
None.

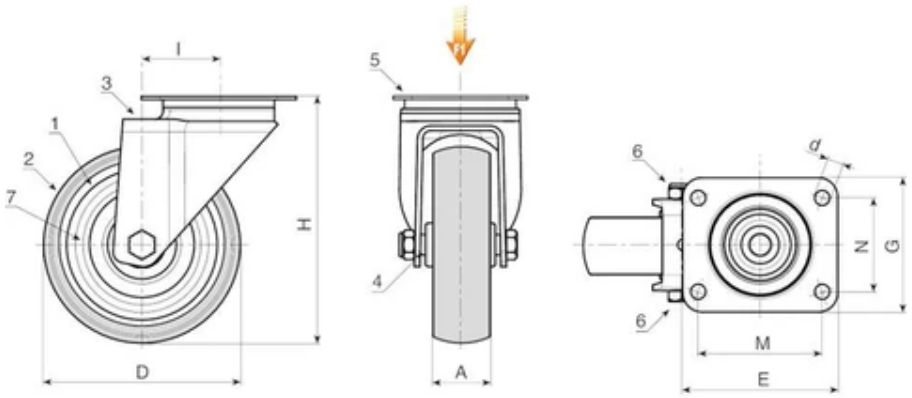

Code	art.	D	A	H	I	E	G	M	N	d	Weight (g)	F1 (Kg)
R407050.0001	R407050.T18P045X045	50	18	70	26	60	60	45	45	6,5	-	40
R407063.0001	R407063.T22P045X045	63	22	90	26	60	60	45	45	6,5	-	60
R407080.0001	R407080.T22P045X045	80	22	109	25	60	60	45	45	6,5	-	60
R407100.0001	R407100.T27P060X050	100	27	134	36	76	70	60	50	8,3	-	80
R407125.0001	R407125.T27P060X050	125	27	159	35	76	70	60	50	8,3	-	80

R408

max 3 Km/h | +50° - 5° | PP | TPE | RoHS COMPLIANT

18 POLYPROPYLENE / RUBBER WHEEL WITH RECTANGULAR SWIVEL STEEL PLATE WITH BRAKE

Ruote in PP/Gomma sintetica (Colletività)



Materials:

Wheel body:

Polypropylene.

Tread:

Synthetic thermoplastic rubber. Hardness 93 ± 3 Shore A.

Surface finish:

Smooth.

Colour:

(1) Black (RAL 9011).

(2) Light grey.

(3-4-5-6-7) Galvanised blue.

Wheel rotation (4):

The hole for the pivot pin is formed by plastic moulding. A galvanised steel tube is positioned between the stud and the hole for protection.

Bracket (3):

Steel fork (DD13), with integrated brake. Brake actuation lever moulded in grey plastic.

Rotating assembly (5):

Steel rotating assembly with double ball race, and rectangular swivel plate with four slotted mounting holes.

Wheel fastening (6):

Steel hex head screw, coupled with a steel nut.

Thread guards (7):

Sheared steel thread guard disk fixed on both sides.

Special requests:

None.

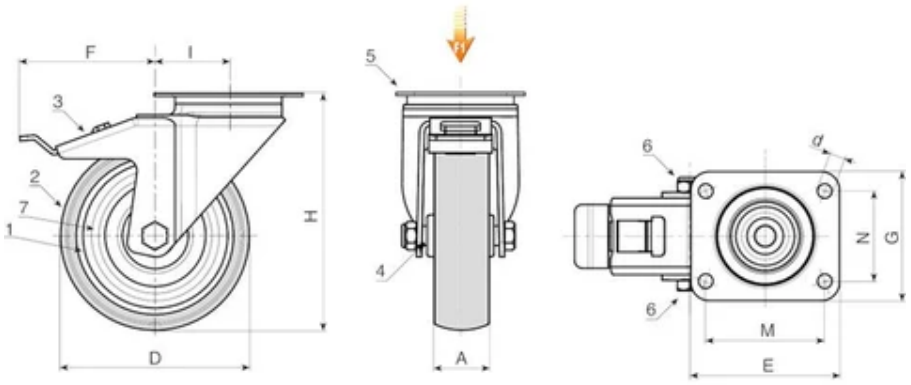

Code	art.	D	A	H	I	E	G	M	N	d	F	Weight (g)	F1 (Kg)
R408050.0001	R408050.T18P045X045	50	18	70	26	60	60	45	45	6,5	84	-	40
R408063.0001	R408063.T22P045X045	63	22	90	26	60	60	45	45	6,5	84	-	60
R408080.0001	R408080.T22P045X045	80	22	109	25	60	60	45	45	6,5	84	-	60
R408100.0001	R408100.T27P060X050	100	27	134	36	76	70	60	50	8,3	106	-	80
R408125.0001	R408125.T27P060X050	125	27	159	35	76	70	60	50	8,3	106	-	80

R409

max 3 Km/h | +50° - 5° | PP | TPE | RoHS COMPLIANT

18

POLYPROPYLENE / RUBBER WHEEL WITH RIGID STEEL FORK

Ruote in PP/Gomma sintetica (Colletività)



Materials:
Wheel body:
Polypropylene.
Tread:
Synthetic thermoplastic rubber. Hardness 93 ± 3 Shore A.

Surface finish:
Smooth.

Colour:
(1) Black (RAL 9011).
(2) Light grey.
(3-4-5-6-7) Galvanised blue.

Wheel rotation (4):
The hole for the pivot pin is formed by plastic moulding. A galvanised steel tube is positioned between the stud and the hole for protection.

Bracket (3):
Steel (DD13) fork, with mounting holes in the base.

Wheel fastening (6):
Steel hex head screw, coupled with a steel nut.

Thread guards (7):
Sheared steel thread guard disk fixed on both sides.

Special requests:
None.

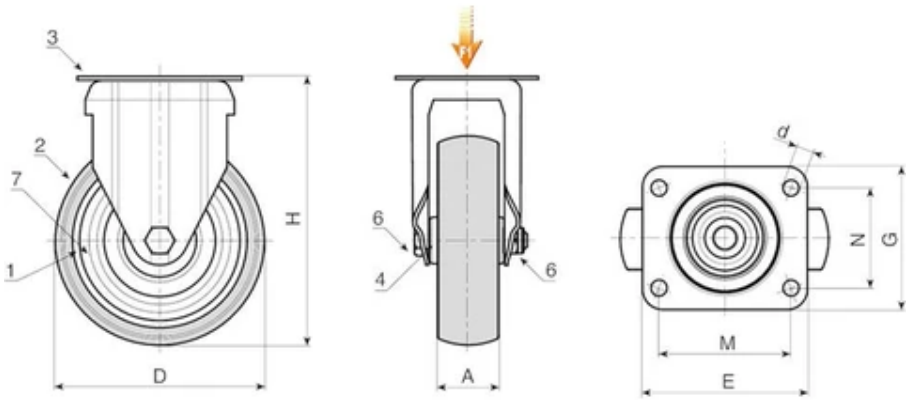

Code	art.	D	A	H	E	G	M	N	d	Weight (g)	F1 (Kg)
R409050.0001	R409050.T18P045X045	50	18	70	60	60	45	45	6,5	-	40
R409063.0001	R409063.T22P045X045	63	22	90	60	60	45	45	6,5	-	60
R409080.0001	R409080.T22P045X045	80	22	109	60	60	45	45	6,5	-	60
R409100.0001	R409100.T27P060X050	100	27	134	76	70	60	50	8,3	-	80
R409125.0001	R409125.T27P060X050	125	27	159	76	70	60	50	8,3	-	80

R600

ESD | max 3 Km/h | +50° - 5° | PP | TPE | RoHS COMPLIANT

18 WHEEL WITH POLYPROPYLENE BODY AND THERMOPLASTIC RUBBER TREAD (WITHOUT RIG)

Ruote in PP/Gomma sintetica (Colletività)



Materials:
Wheel body:
Polypropylene.
Tread:
Synthetic thermoplastic rubber. Hardness 93 ± 3 Shore A.

Surface finish:
Smooth.

Colour:
Body:
Light grey.
Tread:
Dark grey.

Wheel rotation:
The hole for the pivot pin is formed by plastic moulding.

Special requests:
Upon request the wheel can be supplied in material with high electrical conductivity (ESD).

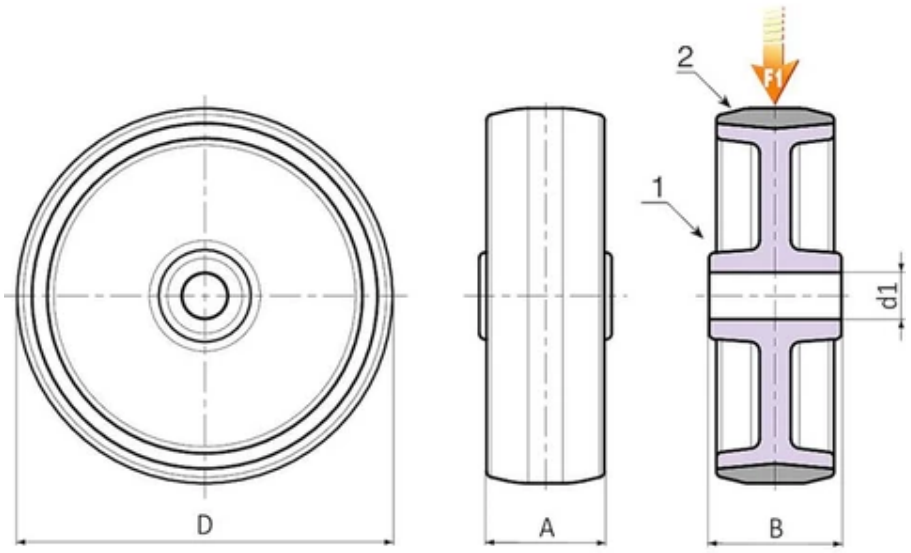

Code	art.	D	A	B	d1	Weight (g)	F1 (Kg)
R600050.0001	R600050.T18D08	50	18	22	8	-	40
R600063.0001	R600063.T22D10	63	22	27	10	-	60
R600080.0002	R600080.T22D10	80	22	27	10	-	60
R600100.0001	R600100.T27D12	100	27	32	12	-	80
R600125.0001	R600125.T27D12	125	27	32	12	-	80

Code	art.	D	A	B	d1	Weight (g)	F1 (Kg)
R600050.0002	R600050.T18D08ESD	50	18	21	8	-	40
R600060.0001	R600060.T22D10ESD	60	22	29	10	-	60
R600080.0001	R600080.T24D10ESD	80	24	29	10	-	60
R600100.0002	R600100.T29D12ESD	100	29	34	12	-	80
R600125.0002	R600125.T29D12ESD	125	29	32	12	-	80

R601

ESD | max 3 Km/h | +50° - 5° | PP | TPE | RoHS COMPLIANT

18 POLYPROPYLENE / RUBBER WHEEL WITH ROUND STEEL SWIVEL SUPPORT AND SMOOTH THROUGH HOLE

Ruote in PP/Gomma sintetica (Colletività)



Materials:

Wheel body:

Polypropylene.

Tread:

Synthetic thermoplastic rubber. Hardness 93 ± 3 Shore A.

Surface finish:

Smooth.

Colour:

(1) Dark grey.

(2) Light grey.

(3-4-5-6-7) Galvanised blue.

Wheel rotation (4):

The hole for the pivot pin is formed by plastic moulding. A galvanised steel tube is positioned between the stud and the hole for protection.

Bracket (3):

Steel fork (DD13).

Rotating assembly (5):

Steel rotating assembly with double ball race and smooth fixing hole, (hole tolerance H7).

Wheel fastening (6):

Steel hex head screw, coupled with a steel nut.

Special requests:

Upon request the wheel can be supplied in material with high electrical conductivity (ESD).

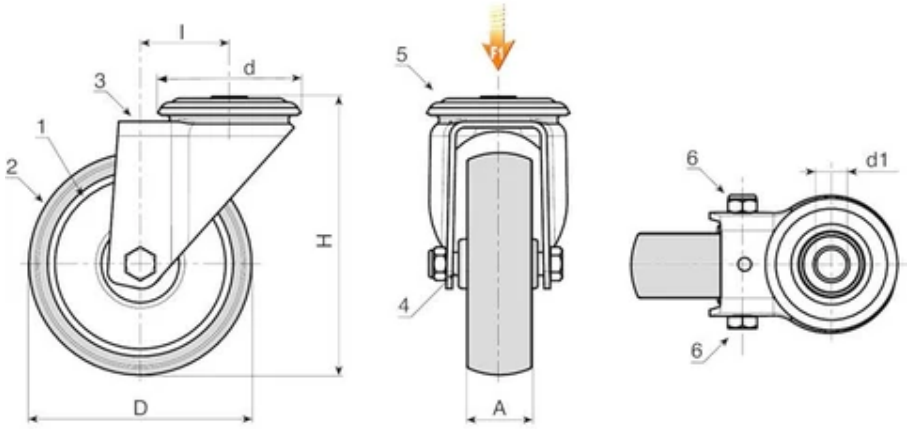

Code	art.	D	A	H	l	d	d1 H7	Weight (g)	F1 (Kg)
R601050.0001	R601050.T18D12	50	18	70	26	48	12	-	40
R601063.0001	R601063.T22D12	63	22	90	26	48	12	-	60
R601080.0001	R601080.T22D12	80	22	109	25	48	12	-	60
R601100.0001	R601100.T27D12	100	27	134	36	57	12	-	80
R601125.0001	R601125.T27D12	125	27	159	35	57	12	-	80

Code	art.	D	A	H	l	d	d1 H7	Weight (g)	F1 (Kg)
R601050.0002	R601050.T18D12ESD	50	18	70	26	48	12	-	40
R601060.0001	R601060.T22D12ESD	60	22	90	26	48	12	-	60
R601080.0002	R601080.T24D12ESD	80	24	109	25	48	12	-	60
R601100.0002	R601100.T29D12ESD	100	29	134	36	57	12	-	80
R601125.0002	R601125.T29D12ESD	125	29	159	35	57	12	-	80

R602

18

POLYPROPYLENE / RUBBER WHEEL WITH ROUND STEEL SWIVEL SUPPORT AND SMOOTH THROUGH HOLE WITH BRAKE

Ruote in PP/Gomma sintetica (Colletività)



Materials:

Wheel body:

Polypropylene.

Tread:

Synthetic thermoplastic rubber. Hardness 93 ± 3 Shore A.

Surface finish:

Smooth.

Colour:

(1) Dark grey.

(2) Light grey.

(3-4-5-6-7) Galvanised blue.

Wheel rotation (4):

The hole for the pivot pin is formed by plastic moulding. A galvanised steel tube is positioned between the stud and the hole for protection.

Bracket (3):

Steel fork (DD13), with integrated brake. Brake actuation lever moulded in grey plastic.

Rotating assembly (5):

Steel rotating assembly with double ball race and smooth fixing hole, (hole tolerance H7).

Wheel fastening (6):

Steel hex head screw, coupled with a steel nut.

Special requests:

Upon request the wheel can be supplied in material with high electrical conductivity (ESD).

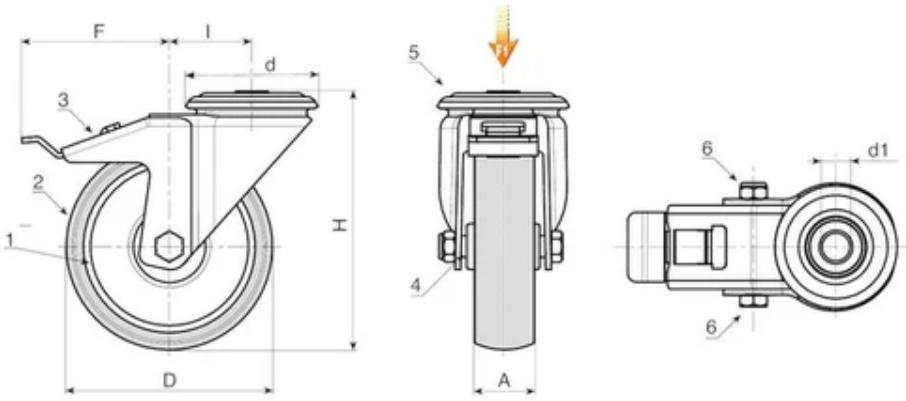

Code	art.	D	A	H	I	d	F	d1 H7	Weight (g)	F1 (Kg)
R602050.0001	R602050.T18D12	50	18	70	26	48	80	12	-	40
R602063.0001	R602063.T22D12	63	22	90	26	48	84	12	-	60
R602080.0001	R602080.T22D12	80	22	109	25	48	84	12	-	60
R602100.0001	R602100.T27D12	100	27	134	36	57	106	12	-	80
R602125.0001	R602125.T27D12	125	27	159	35	57	106	12	-	80

Code	art.	D	A	H	I	d	F	d1 H7	Weight (g)	F1 (Kg)
R602050.0002	R602050.T18D12ESD	50	18	70	26	48	80	12	-	40
R602060.0001	R602060.T22D12ESD	60	22	90	26	48	84	12	-	60
R602080.0002	R602080.T24D12ESD	80	24	109	25	48	84	12	-	60
R602100.0002	R602100.T29D12ESD	100	29	134	36	57	106	12	-	80
R602125.0002	R602125.T29D12ESD	125	29	159	35	57	106	12	-	80

R603



18 POLYPROPYLENE / RUBBER WHEEL WITH ROUND STEEL SWIVEL SUPPORT AND THREADED STUD

Ruote in PP/Gomma sintetica (Colletività)



Materials:

Wheel body:

Polypropylene.

Tread:

Synthetic thermoplastic rubber. Hardness 93 ± 3 Shore A.

Surface finish:

Smooth.

Colour:

(1) Dark grey.

(2) Light grey.

(3-4-5-6-7) Galvanised blue.

Wheel rotation (4):

The hole for the pivot pin is formed by plastic moulding. A galvanised steel tube is positioned between the stud and the hole for protection.

Bracket (3):

Steel fork (DD13).

Rotating assembly (5):

Steel rotating assembly with double ball race and threaded stud (thread tolerance 6g).

Wheel fastening (6):

Steel hex head screw, coupled with a steel nut.

Special requests:

With a minimum of 100 pieces, M12 threaded studs can be supplied instead of M10, and vice versa.

Upon request the wheel can be supplied in material with high electrical conductivity (ESD).

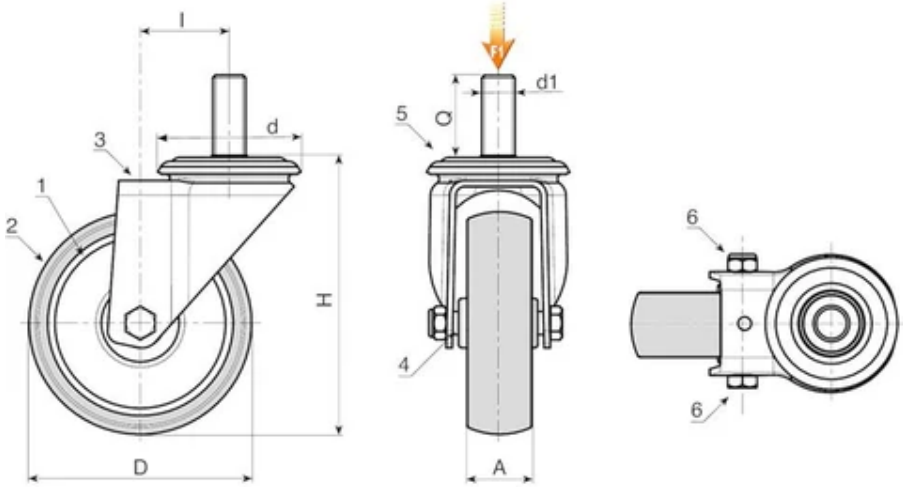

Code	art.	D	A	H	l	d	d1 6g	Q	Weight (g)	F1 (Kg)
R603050.0001	R603050.T18M10X25	50	18	70	26	48	M10	25	-	40
R603063.0001	R603063.T22M10X25	63	22	90	26	48	M10	25	-	60
R603080.0001	R603080.T22M10X25	80	22	109	25	48	M10	25	-	60
R603100.0001	R603100.T27M12X30	100	27	134	36	57	M12	30	-	80
R603125.0001	R603125.T27M12X30	125	27	159	35	57	M12	30	-	80

Code	art.	D	A	H	l	d	d1 6g	Q	Weight (g)	F1 (Kg)
R603050.0002	R603050.T18M10X25ESD	50	18	70	26	48	M10	25	-	40
R603060.0001	R603060.T22M10X25ESD	60	22	90	26	48	M10	25	-	60
R603080.0002	R603080.T24M10X25ESD	80	24	109	25	48	M10	25	-	60
R603100.0002	R603100.T29M12X30ESD	100	29	134	36	57	M12	30	-	80
R603125.0002	R603125.T29M12X30ESD	125	29	159	35	57	M12	30	-	80

R604

PP | TPE | RoHS COMPLIANT

18 POLYPROPYLENE / RUBBER WHEEL WITH ROUND STEEL SWIVEL SUPPORT AND THREADED STUD WITH BRAKE

Ruote in PP/Gomma sintetica (Colletività)



Materials:

Wheel body:

Polypropylene.

Tread:

Synthetic thermoplastic rubber. Hardness 93 ± 3 Shore A.

Surface finish:

Smooth.

Colour:

(1) Dark grey.

(2) Light grey.

(3-4-5-6-7) Galvanised blue.

Wheel rotation (4):

The hole for the pivot pin is formed by plastic moulding. A galvanised steel tube is positioned between the stud and the hole for protection.

Bracket (3):

Steel fork (DD13), with integrated brake. Brake actuation lever moulded in grey plastic.

Rotating assembly (5):

Steel rotating assembly with double ball race and threaded stud (thread tolerance 6g).

Wheel fastening (6):

Steel hex head screw, coupled with a steel nut.

Special requests:

With a minimum of 100 pieces, M12 threaded studs can be supplied instead of M10, and vice versa.

Upon request the wheel can be supplied in material with high electrical conductivity (ESD).

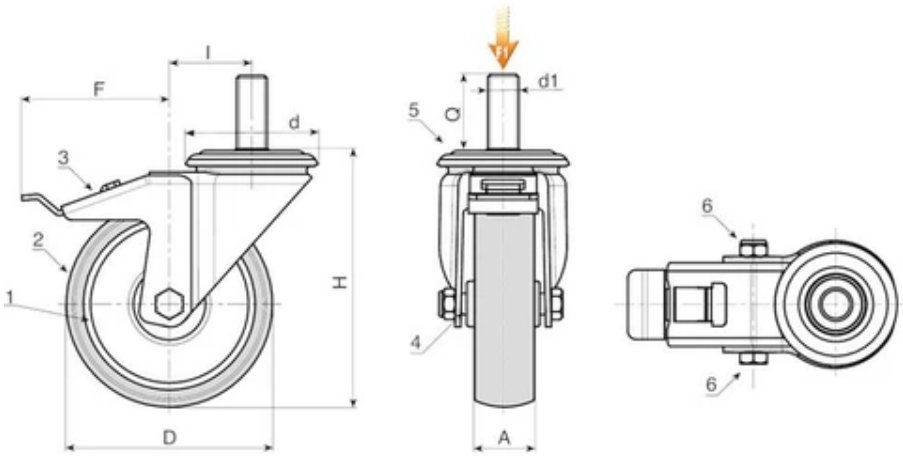

Code	art.	D	A	H	I	d	F	d1 6g	Q	Weight (g)	F1 (Kg)
R604050.0001	R604050.T18M10X25	50	18	70	26	48	80	M10	25	-	40
R604063.0001	R604063.T22M10X25	63	22	90	26	48	84	M10	25	-	60
R604080.0001	R604080.T22M10X25	80	22	109	25	48	84	M10	25	-	60
R604100.0001	R604100.T27M12X30	100	27	134	36	57	106	M12	30	-	80
R604125.0001	R604125.T27M12X30	125	27	159	35	57	106	M12	30	-	80

Code	art.	D	A	H	I	d	F	d1 6g	Q	Weight (g)	F1 (Kg)
R604050.0002	R604050.T18M10X25ESD	50	18	70	26	48	80	M10	25	-	40
R604060.0001	R604060.T22M10X25ESD	60	22	90	26	48	84	M10	25	-	60
-	R604080.T24M10X25ESD	80	24	109	25	48	84	M10	25	-	60
-	R604100.T29M12X30ESD	100	29	134	36	57	106	M12	30	-	80
-	R604125.T29M12X30ESD	125	29	159	35	57	106	M12	30	-	80

R607

18

POLYPROPYLENE / RUBBER WHEEL WITH RECTANGULAR SWIVEL STEEL PLATE

Ruote in PP/Gomma sintetica (Colletività)



Materials:

Wheel body:

Polypropylene.

Tread:

Synthetic thermoplastic rubber. Hardness 93 ± 3 Shore A.

Surface finish:

Smooth.

Colour:

(1) Dark grey.

(2) Light grey.

(3-4-5-6-7) Galvanised blue.

Wheel rotation (4):

The hole for the pivot pin is formed by plastic moulding. A galvanised steel tube is positioned between the stud and the hole for protection.

Bracket (3):

Steel fork (DD13).

Rotating assembly (5):

Steel rotating assembly with double ball race, and rectangular swivel plate with four slotted mounting holes.

Wheel fastening (6):

Steel hex head screw, coupled with a steel nut.

Special requests:

Upon request the wheel can be supplied in material with high electrical conductivity (ESD).

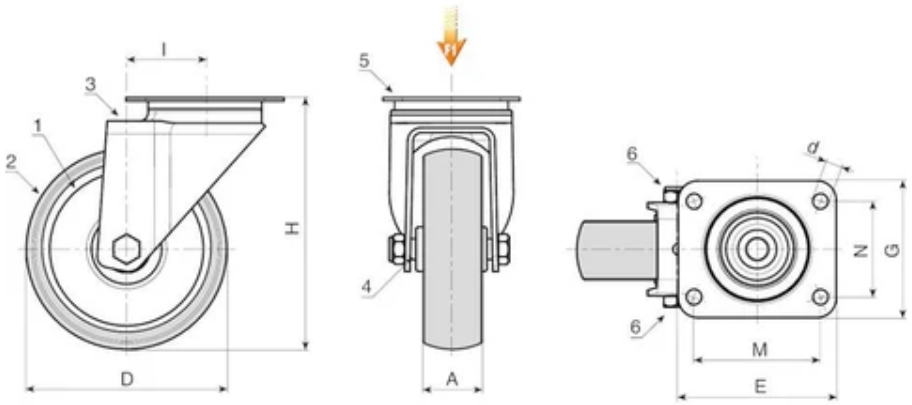

Code	art.	D	A	H	I	E	G	M	N	d	Weight (g)	F1 (Kg)
R607050.0001	R607050.T18P045X045	50	18	70	26	60	60	45	45	6,5	-	40
R607063.0001	R607063.T22P045X045	63	22	90	26	60	60	45	45	6,5	-	60
R607080.0001	R607080.T22P045X045	80	22	109	25	60	60	45	45	6,5	-	60
R607100.0001	R607100.T27P060X050	100	27	134	36	76	70	60	50	8,3	-	80
R607125.0001	R607125.T27P060X050	125	27	159	35	76	70	60	50	8,3	-	80

Code	art.	D	A	H	I	E	G	M	N	d	Weight (g)	F1 (Kg)
R607050.0002	R607050.T18P045X045ESD	50	18	70	26	60	60	45	45	6,5	-	40
R607060.0001	R607060.T22P045X045ESD	60	22	90	26	60	60	45	45	6,5	-	60
R607080.0002	R607080.T24P045X045ESD	80	24	109	25	60	60	45	45	6,5	-	60
R607100.0002	R607100.T29P060X050ESD	100	29	134	36	76	70	60	50	8,3	-	80
R607125.0002	R607125.T29P060X050ESD	125	29	159	35	76	70	60	50	8,3	-	80

R608

ESD | max 3 Km/h | +50° - 5° | PP | TPE | RoHS COMPLIANT

18 POLYPROPYLENE / RUBBER WHEEL WITH RECTANGULAR SWIVEL STEEL PLATE WITH BRAKE

Ruote in PP/Gomma sintetica (Colletività)



Materials:

Wheel body:

Polypropylene.

Tread:

Synthetic thermoplastic rubber. Hardness 93 ± 3 Shore A.

Surface finish:

Smooth.

Colour:

(1) Dark grey.

(2) Light grey.

(3-4-5-6-7) Galvanised blue.

Wheel rotation (4):

The hole for the pivot pin is formed by plastic moulding. A galvanised steel tube is positioned between the stud and the hole for protection.

Bracket (3):

Steel fork (DD13), with integrated brake. Brake actuation lever moulded in grey plastic.

Rotating assembly (5):

Steel rotating assembly with double ball race, and rectangular swivel plate with four slotted mounting holes.

Wheel fastening (6):

Steel hex head screw, coupled with a steel nut.

Special requests:

Upon request the wheel can be supplied in material with high electrical conductivity (ESD).

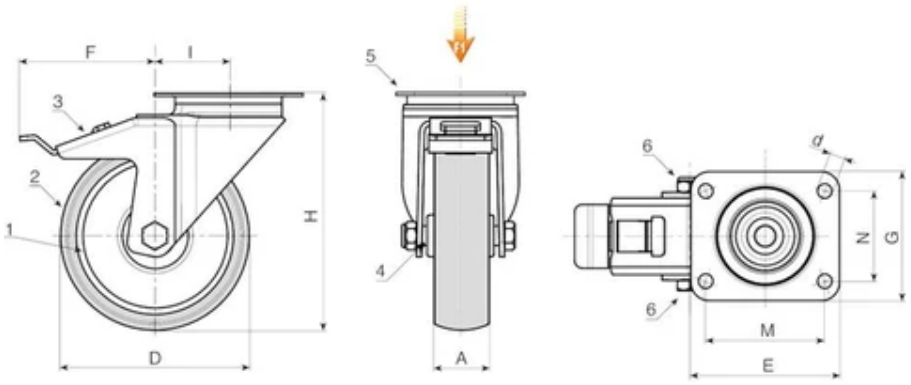

Code	art.	D	A	H	I	E	G	M	N	d	F	Weight (g)	F1 (Kg)
R608050.0001	R608050.T18P045X045	50	18	70	26	60	60	45	45	6,5	84	-	40
R608063.0001	R608063.T22P045X045	63	22	90	26	60	60	45	45	6,5	84	-	60
R608080.0001	R608080.T22P045X045	80	22	109	25	60	60	45	45	6,5	84	-	60
R608100.0001	R608100.T27P060X050	100	27	134	36	76	70	60	50	8,3	106	-	80
R608125.0001	R608125.T27P060X050	125	27	159	35	76	70	60	50	8,3	106	-	80

Code	art.	D	A	H	I	E	G	M	N	d	F	Weight (g)	F1 (Kg)
R608050.0002	R608050.T18P045X045ESD	50	18	70	26	60	60	45	45	6,5	84	-	40
R608060.0001	R608060.T22P045X045ESD	60	22	90	26	60	60	45	45	6,5	84	-	60
R608080.0002	R608080.T24P045X045ESD	80	24	109	25	60	60	45	45	6,5	84	-	60
R608100.0002	R608100.T29P060X050ESD	100	29	134	36	76	70	60	50	8,3	106	-	80
R608125.0002	R608125.T29P060X050ESD	125	29	159	35	76	70	60	50	8,3	106	-	80

R609

18

POLYPROPYLENE / RUBBER WHEEL WITH RIGID STEEL FORK AND MOUNTING PLATE

Ruote in PP/Gomma sintetica (Colletività)



Materials:

Wheel body:

Polypropylene.

Tread:

Synthetic thermoplastic rubber. Hardness 93 ± 3 Shore A.

Surface finish:

Smooth.

Colour:

(1) Dark grey.

(2) Light grey.

(3-4-5-6-7) Galvanised blue.

Wheel rotation (4):

The hole for the pivot pin is formed by plastic moulding. A galvanised steel tube is positioned between the stud and the hole for protection.

Bracket (3):

Steel (DD13) fork, with mounting holes in the base.

Wheel fastening (6):

Steel hex head screw, coupled with a steel nut.

Special requests:

Upon request the wheel can be supplied in material with high electrical conductivity (ESD).

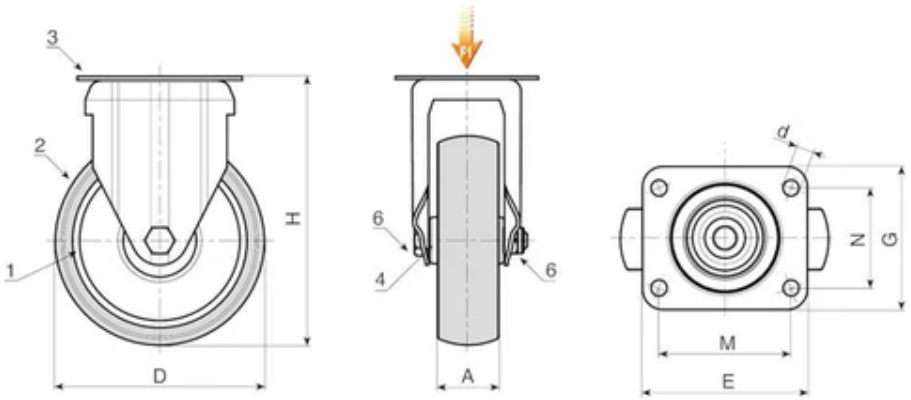

Code	art.	D	A	H	E	G	M	N	d	Weight (g)	F1 (Kg)
R609050.0001	R609050.T18P045X045	50	18	70	60	60	45	45	6,5	-	40
R609063.0001	R609063.T22P045X045	63	22	90	60	60	45	45	6,5	-	60
R609080.0001	R609080.T22P045X045	80	22	109	60	60	45	45	6,5	-	60
R609100.0001	R609100.T27P060X050	100	27	134	76	70	60	50	8,3	-	80
R609125.0001	R609125.T27P060X050	125	27	159	76	70	60	50	8,3	-	80

Code	art.	D	A	H	E	G	M	N	d	Weight (g)	F1 (Kg)
R609050.0002	R609050.T18P045X045ESD	50	18	70	60	60	45	45	6,5	-	40
R609060.0001	R609060.T22P045X045ESD	60	22	90	60	60	45	45	6,5	-	60
R609080.0002	R609080.T24P045X045ESD	80	24	109	60	60	45	45	6,5	-	60
R609100.0002	R609100.T29P060X050ESD	100	29	134	76	70	60	50	8,3	-	80
R609125.0002	R609125.T29P060X050ESD	125	29	159	76	70	60	50	8,3	-	80

R610

ESD | max 3 Km/h | +50° - 5° | PP | TPE | RoHS COMPLIANT

18 POLYPROPYLENE / RUBBER WHEEL WITH RIGID STEEL FORK AND SMOOTH THROUGH BORE

Ruote in PP/Gomma sintetica (Colletività)



Materials:

Wheel body:

Polypropylene.

Tread:

Synthetic thermoplastic rubber. Hardness 93 ± 3 Shore A.

Surface finish:

Smooth.

Colour:

(1) Dark grey.

(2) Light grey.

(3-4-5-6-7) Galvanised blue.

Wheel rotation (4):

The hole for the pivot pin is formed by plastic moulding. A galvanised steel tube is positioned between the stud and the hole for protection.

Bracket (3):

Steel (DD13) fork, with mounting hole (hole tolerance H7).

Wheel fastening (6):

Steel hex head screw, coupled with a steel nut.

Special requests:

Upon request the wheel can be supplied in material with high electrical conductivity (ESD).

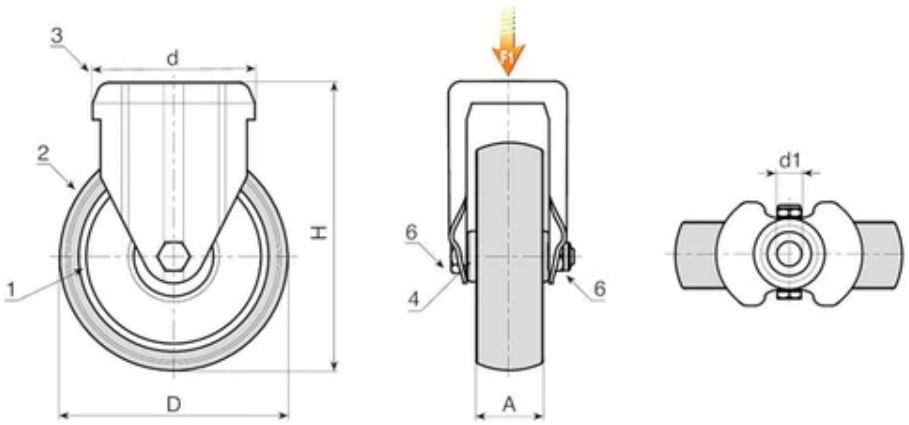

Code	art.	D	A	H	d	d1 H7	Weight (g)	F1 (Kg)
R610050.0001	R610050.T18D12	50	18	70	48	12	-	40
R610063.0001	R610063.T22D12	63	22	90	48	12	-	60
R610080.0001	R610080.T22D12	80	22	109	48	12	-	60
R610100.0001	R610100.T27D12	100	27	134	57	12	-	80
R610125.0001	R610125.T27D12	125	27	159	57	12	-	80

Code	art.	D	A	H	d	d1 H7	Weight (g)	F1 (Kg)
R610050.0002	R610050.T18D12ESD	50	18	70	48	12	-	40
R610060.0001	R610060.T22D12ESD	60	22	90	48	12	-	60
R610080.0002	R610080.T24D12ESD	80	24	109	48	12	-	60
R610100.0002	R610100.T29D12ESD	100	29	134	57	12	-	80
R610125.0002	R610125.T29D12ESD	125	29	159	57	12	-	80

T401

+60° -20° | NdFeB | TPE | RoHS COMPLIANT

18 COATED NEODYMIUM ROUND DISC MAGNET WITH THREADED STUD

Magneti ricoperti

Materials:

(1) Thermoplastic rubber TPE (75 Shore).

(2) Flat neodymium magnet (NdFeB).

(3) Turned galvanised steel base, with threaded stud (thread tolerance 6g).



Surface finish:

Smooth.

Colour:

Black	(RAL 9011 code 01).
White	(RAL 9004 code 04).



Special requests:

None.

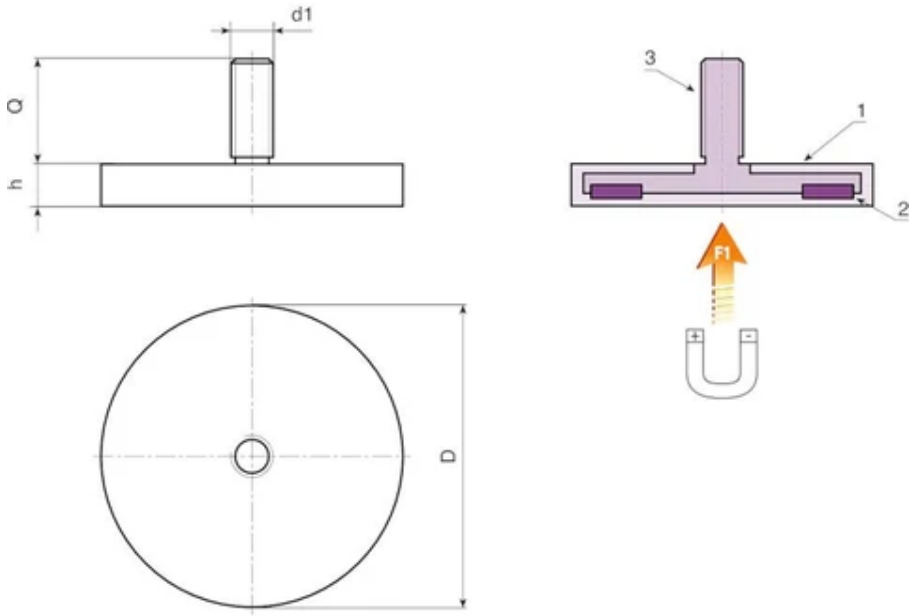

Black version (code 01)

Code	art.	D	h	d1 6g	Q	Weight (g)	F1 (N)
T401012.0001	T401012.GM04X0801	12	7	M4	08	4.5	13
T401018.0001	T401018.GM04X0601	18	6	M4	06	7.5	37
T401022.0001	T401022.GM04X6.501	22	6	M4	6.5	11	58
T401043.0001	T401043.GM06X1501	43	6	M6	15	32	100
T401066.0001	T401066.GM08X1501	66	8.5	M8	15	107	250
T401088.0001	T401088.GM08X1501	88	8.5	M8	15	193	550

White version (code 04)

Code	art.	D	h	d1 6g	Q	Weight (g)	F1 (N)
T401012.0002	T401012.GM04X0804	12	7	M4	08	4.5	13
T401018.0002	T401018.GM04X0604	18	6	M4	06	7.5	37
T401022.0002	T401022.GM04X6.504	22	6	M4	6.5	11	58
T401043.0002	T401043.GM06X1504	43	6	M6	15	32	100
T401066.0002	T401066.GM08X1504	66	8.5	M8	15	107	250
T401088.0002	T401088.GM08X1504	88	8.5	M8	15	193	550

T402

+60° -20° | NdFeB | TPE | RoHS COMPLIANT

18 COATED NEODYMIUM ROUND DISC MAGNET WITH THREADED HOLE

Magneti ricoperti

Materials:

(1) Thermoplastic rubber TPE (75 Shore).

(2) Flat neodymium magnet (NdFeB).

(3) Turned galvanised steel base, with female threaded hole (thread tolerance 6H).



Surface finish:

Smooth.

Colour:

Black	(RAL 9011 code 01).
White	(RAL 9004 code 04).



Special requests:

None.

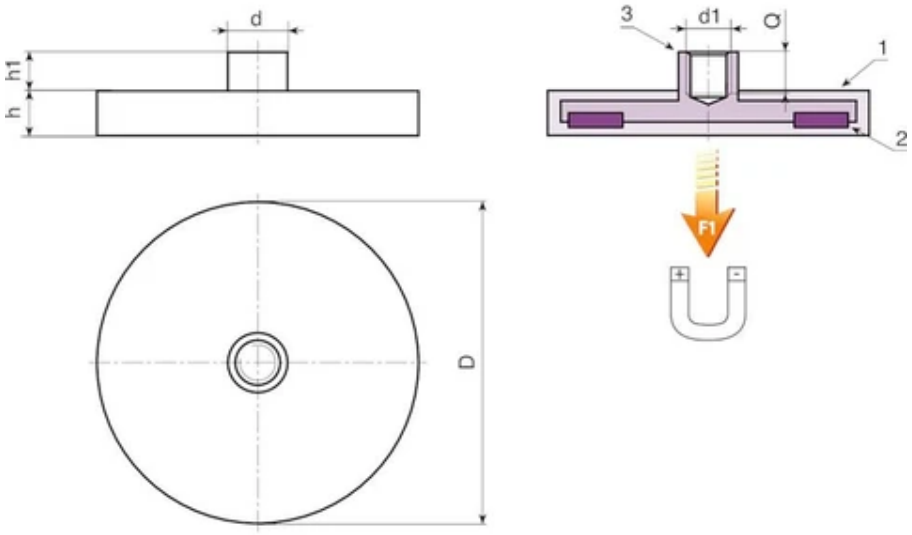

Black version (code 01)

Code	art.	D	d	h	h1	d1 6H	Q	Weight (g)	F1 (N)
T402012.0001	T402012.GM0401	12	8	7	7.5	M4	6	6	13
T402018.0001	T402018.GM0401	18	8	6	5.5	M4	5	9	37
T402022.0001	T402022.GM0401	22	8	6	5.5	M4	5	13	58
T402031.0001	T402031.GM0401	31	8	6	5.5	M4	5	22	89
T402043.0001	T402043.GM0401	43	8	6	4.5	M4	5	30	100
T402057.0001	T402057.GM0501	57	10	7.5	7	M5	6	82	200
T402066.0001	T402066.GM0501	66	10	8.5	6.5	M5	8	105	250
T402088.0001	T402088.GM0801	88	12	8.5	8.5	M8	11	192	550

White version (code 04)

Code	art.	D	d	h	h1	d1 6H	Q	Weight (g)	F1 (N)
T402012.0002	T402012.GM0404	12	8	7	7.5	M4	6	6	13
T402018.0002	T402018.GM0404	18	8	6	5.5	M4	5	9	37
T402022.0002	T402022.GM0404	22	8	6	5.5	M4	5	13	58
T402031.0002	T402031.GM0404	31	8	6	5.5	M4	5	22	89
T402043.0002	T402043.GM0404	43	8	6	4.5	M4	5	30	100
T402057.0002	T402057.GM0504	57	10	7.5	7	M5	6	82	200
T402066.0002	T402066.GM0504	66	10	8.5	6.5	M5	8	105	250
T402088.0002	T402088.GM0804	88	12	8.5	8.5	M8	11	192	550

T403

+60° -20° | NdFeB | TPE | RoHS COMPLIANT

18 COATED NEODYMIUM ROUND DISC MAGNET - WITH SMOOTH THROUGH BORE

Magneti ricoperti

Materials:

(1) Thermoplastic rubber TPE (75 Shore).

(2) Flat neodymium magnet (NdFeB).

(3) Turned galvanised steel base, with female threaded hole (thread tolerance 6H).



Surface finish:

Smooth.

Colour:

Black	(RAL 9011 code 01).
White	(RAL 9004 code 04).



Special requests:

None.

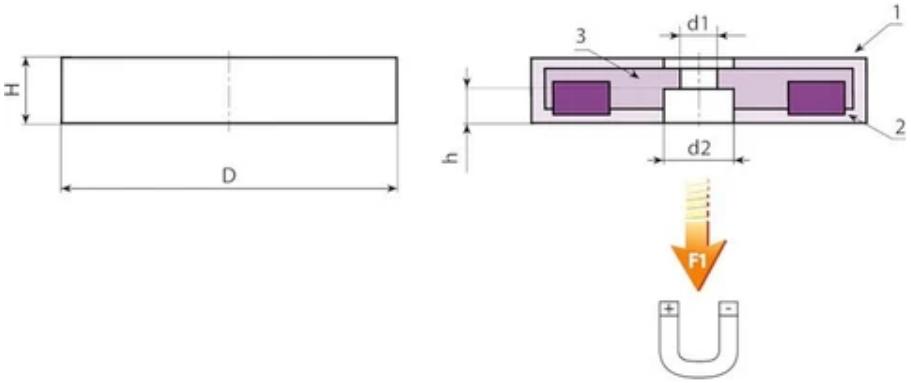

Black version (code 01)

Code	art.	D	H	h	d2	d1	Weight (g)	F1 (N)
T403018.0001	T403018.GD0301	18	6	3	8	3	5,5	25
T403022.0001	T403022.GD0401	22	6	3,5	8,2	4	8	38
T403031.0001	T403031.GD0601	31	6	3,5	9	6	20	89
T403057.0001	T403057.GD0801	57	7,5	3,3	25,3	8	77	200
T403066.0001	T403066.GD5.501	66	8,5	3,2	22	5,5	100	250

White version (code 04)

Code	art.	D	H	h	d2	d1	Weight (g)	F1 (N)
T403018.0002	T403018.GD0304	18	6	3	8	3	5,5	25
T403022.0002	T403022.GD0404	22	6	3,5	8,2	4	8	38
T403031.0001	T403031.GD0601	31	6	3,5	9	6	20	89
T403057.0002	T403057.GD0804	57	7,5	3,3	25,3	8	77	200
T403066.0002	T403066.GD5.504	66	8,5	3,2	22	5,5	100	250

T404

+60° -20° | NdFeB | TPE | RoHS COMPLIANT

18 COATED NEODYMIUM ROUND DISC MAGNET - WITH FEMALE THREADED HOLE

Magneti ricoperti



Materials:

(1) Thermoplastic rubber TPE (75 Shore).

(2) Flat neodymium magnet (NdFeB).

(3) Turned galvanised steel base, with female threaded hole (thread tolerance 6H).

Surface finish:

Smooth.

Colour:

Black	(RAL 9011 code 01).
White	(RAL 9004 code 04).

Special requests:

None.

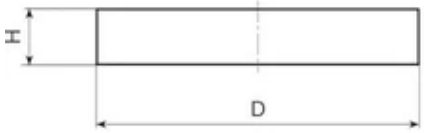

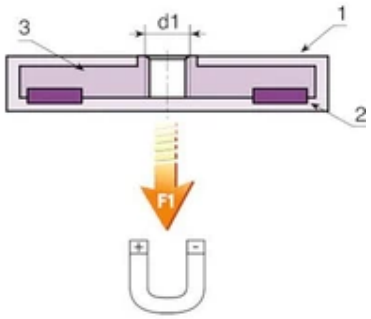

Black version (code 01)

Code	art.	D	H	d1 6H	Weight (g)	F1 (N)
T404018.0001	T404018.GM0401	18	6	M4	6	25
T404022.0001	T404022.GM0401	22	6	M4	9	38
T404031.0001	T404031.GM0501	31	6	M5	22	89
T404043.0001	T404043.GM0401	43	6	M4	30	100
T404057.0001	T404057.GM0501	57	7,5	M5	80	200
T404066.0001	T404066.GM0601	66	8,5	M6	105	250
T404088.0001	T404088.GM0601	88	8,5	M6	190	550

White version (code 04)

Code	art.	D	H	d1 6H	Weight (g)	F1 (N)
T404018.0002	T404018.GM0404	18	6	M4	6	25
T404022.0002	T404022.GM0404	22	6	M4	9	38
T404031.0002	T404031.GM0504	31	6	M5	22	89
T404043.0002	T404043.GM0404	43	6	M4	30	100
T404057.0001	T404057.GM0501	57	7,5	M5	80	200
T404066.0002	T404066.GM0604	66	8,5	M6	105	250
T404088.0002	T404088.GM0604	88	8,5	M6	190	550

T405

+60° -20° | NdFeB | PA6 +G.F. | RoHS✓ COMPLIANT

18 COATED NEODYMIUM ROUND FLAT MAGNET

Magneti ricoperti

Materials:

(1) Polyamide-based plastic casing.

Resistant to oils and greases.

(2) Flat neodymium magnet (NdFeB).



Surface finish:

Smooth.

Colour:

Black	(RAL 9011 code 01).
White	(RAL 9004 code 04).
Red	(RAL 9003 code 16).



Special requests:

Upon request and for special quantities a logo or symbol, either pad printed or as a resin badge, can be applied.





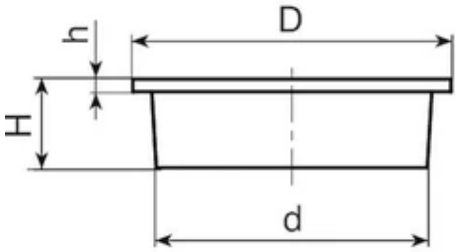

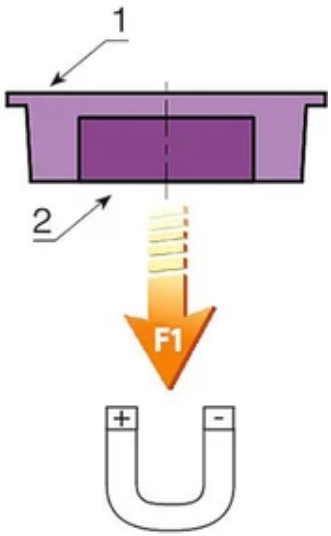

Black version (code 01)

Code	art.	D	H	d	h	Weight (g)	F1 (N)
T405018.0001	T405018.T01	18	8	14	2	3	10
T405025.0001	T405025.T01	25	8	22	2	5	14
T405030.0001	T405030.T01	30	7,5	28,5	2	8	27
T405036.0001	T405036.T01	36	8,5	32,5	2	9	35
T405040.0001	T405040.T01	40	7,8	36	2	10,5	35

Red version (code 16)

Code	art.	D	H	d	h	Weight (g)	F1 (N)
T405018.0003	T405018.T16	18	8	14	2	3	10
T405025.0003	T405025.T16	25	8	22	2	5	14

Code	art.	D	H	d	h	Weight (g)	F1 (N)
T405030.0003	T405030.T16	30	7,5	28,5	2	8	27
T405036.0003	T405036.T16	36	8,5	32,5	2	9	35
T405040.0003	T405040.T16	40	7,8	36	2	10,5	35

White version (code 04)

Code	art.	D	H	d	h	Weight (g)	F1 (N)
T405018.0002	T405018.T04	18	8	14	2	3	10
T405025.0002	T405025.T04	25	8	22	2	5	14
T405030.0002	T405030.T04	30	7,5	28,5	2	8	27
T405036.0002	T405036.T04	36	8,5	32,5	2	9	35
T405040.0002	T405040.T04	40	7,8	36	2	10,5	35

T410

+200° -20° | FERRITE | AVP | Aisi 304 | RoHS COMPLIANT

18 FERRITE ROUND DISC MAGNET WITH STEEL SHELL AND SMOOTH THROUGH BORE

Magneti Ferrite

Materials:

(2) Flat ferrite magnet.

(3) Plastic spacer.

T410:

(1) Turned free-cutting steel shell.

T410PIN:

(1) Turned stainless steel shell (Aisi 304).



Surface finish:

Smooth.

Colour:

T410:

Standard blue galvanising.

T410PIN:

Natural.



Special requests:

Upon request and for special quantities the steel shell of model T410 can be supplied black galvanised (720h salt spray resistance).

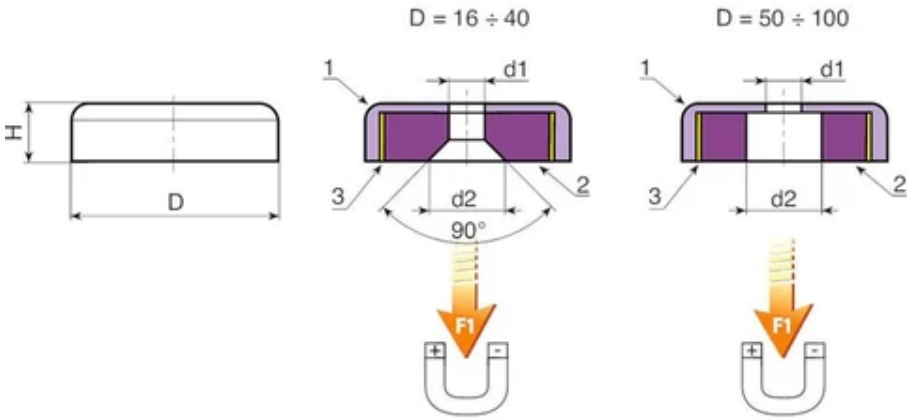

Version VZD: with galvanised shell

Code	art.	D	H +0,5/-0,2	d2	d1 ±0,2	Weight (g)	F1 (N)
T410016.0001	T410016.VZD03.5	16 ±0,1	4,5	6,5 +1	3,5	4	14
T410020.0002	T410020.VZD04.1	20 ±0,1	6	9,4 +1	4,1	9	27
T410025.0002	T410025.VZD05.5	25 ±0,1	7	11,5 +1	5,5	17	36
T410032.0002	T410032.VZD05.5	32 ±0,1	7	11,5 +1	5,5	27	72
T410040.0002	T410040.VZD08.5	40 ±0,1	8	12,5 +1	5,5	52	90
T410050.0002	T410050.VZD08.5	50 +0,2/-0,1	10	22	8,5	85	180
T410063.0002	T410063.VZD06.5	63 +0,3/-0,1	14	24	6,5	197	290
T410080.0001	T410080.VZD06.5	80 +0,3/-0,1	18	11,5	6,5	458	540
T410100.0001	T410100.VZD10.5	100 +0,5/-0,1	22	34	10,5	815	680

Version HND: with stainless steel shell (Aisi 304)

Code	art.	D	H +0,5/-0,2	d2	d1 ±0,2	Weight (g)	F1 (N)
T410020.0001	T410020.HND04.1PIN	20 ±0,1	6	9,4 +1	4,1	9	22
T410025.0001	T410025.HND05.5PIN	25 ±0,1	7	11,5 +1	5,5	17	29
T410032.0001	T410032.HND05.5PIN	32 ±0,1	7	11,5 +1	5,5	27	58
T410040.0001	T410040.HND08.5PIN	40 ±0,1	8	12,5 +1	5,5	52	72
T410050.0001	T410050.HND08.5PIN	50 +0,2/-0,1	10	22	8,5	85	85
T410063.0001	T410063.HND06.5PIN	63 +0,3/-0,1	14	24	6,5	195	195

T410M

+200° -20° | FERRITE | AVP | RoHS COMPLIANT

18 FERRITE ROUND DISC MAGNET WITH STEEL SHELL AND THREADED THROUGH HOLE

Magneti Ferrite

Materials:

(1) Turned free-cutting steel shell with threaded through hole (thread tolerance 6H).

(2) Flat ferrite magnet.

(3) Plastic spacer.



Surface finish:

Smooth.

Colour:

Standard blue galvanising.

Special requests:

Upon request and for special quantities the steel shell of model T410M can be supplied black galvanised (720h salt spray resistance).

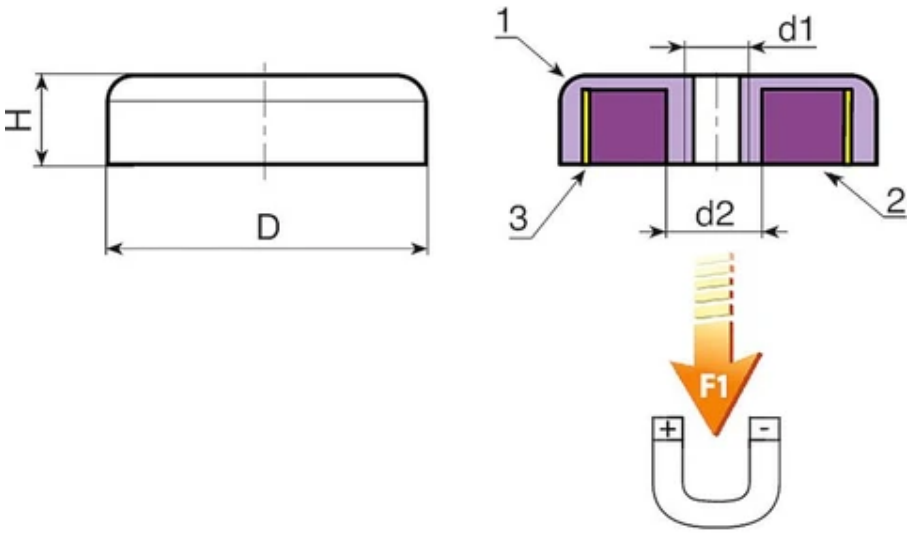

Code	art.	D	H +0,5/-0,2	d2	d1 6H	Weight (g)	F1 (N)
T410025.0003	T410025.VZM04	25 ±0,1	7	5,2	M4	18	36
T410032.0003	T410032.VZM04	32 ±0,1	7	5,2	M4	29	75
T410040.0003	T410040.VZM04	40 +0,2/ -0,1	8	5,2	M4	53	90

Code	art.	D	H +0,5/-0,2	d2	d1 6H	Weight (g)	F1 (N)
T410050.0003	T410050.VZM06	50 +0,2/ -0,1	10	12	M6	94	170
T410050.0004	T410050.VZM08	50 +0,2/ -0,1	10	12	M8	94	170
T410063.0003	T410063.VZM08	63 +0,3/ -0,1	14	13	M8	206	290
T410080.0002	T410080.VZM08	80 +0,3/ -0,1	18	14,5	M8	472	550
T410080.0003	T410080.VZM10	80 +0,3/ -0,1	18	14,5	M10	466	550

T411

+80° -20° NdFeB AVP RoHS COMPLIANT

18 NEODYMIUM ROUND DISC MAGNET WITH STEEL SHELL AND SMOOTH THROUGH BORE

Magneti Neodimio (NdFeB)

Materials:

(1) Turned free-cutting steel shell with smooth through bore.

(2) Flat neodymium-iron-boron magnet (NdFeB).

(3) Plastic spacer.



Surface finish:

Smooth.

Colour:

Standard blue galvanising.

Special requests:

Upon request and for special quantities the steel shell of model T411 can be supplied black galvanised (720h salt spray resistance).

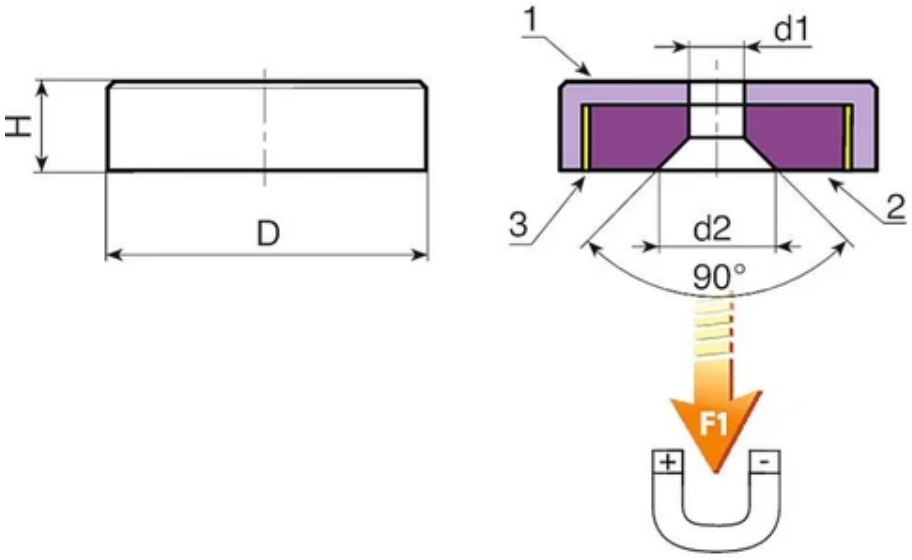

Code	art.	D ±0,1	H ±0,2	d2 +1	d1 ±0,1	Weight (g)	F1 (N)
T411010.0001	T411010.VZD02.6	10	4,5	5,2	2,6	2	19
T411013.0001	T411013.VZD03.5	13	4,5	6,6	3,5	4	40
T411016.00001	T411016.VZD03.5	16	4,5	6,6	3,5	6	75

Code	art.	D ±0,1	H ±0,2	d2 +1	d1 ±0,1	Weight (g)	F1 (N)
T411020.0001	T411020.VZD04.5	20	6	9,3	4,5	13	105
T411025.0001	T411025.VZD04.5	25	7	9	4,5	24	160
T411032.0001	T411032.VZD05.5	32	7	11	5,5	39	310
T411040.0001	T411040.VZD05.5	40	8	10,3	5,5	73	500

T411M

+80° -20° | NdFeB | AVP | RoHS COMPLIANT

18 NEODYMIUM ROUND DISC MAGNET WITH STEEL SHELL AND THREADED THROUGH HOLE

Magneti Neodimio (NdFeB)

Materials:

(1) Turned free-cutting steel shell with threaded through hole (thread tolerance 6H).

(2) Flat neodymium-iron-boron magnet (NdFeB).

(3) Plastic spacer.



Surface finish:

Smooth.

Colour:

Standard blue galvanising.

Special requests:

Upon request and for special quantities the steel shell can be supplied black galvanised (720h salt spray resistance).

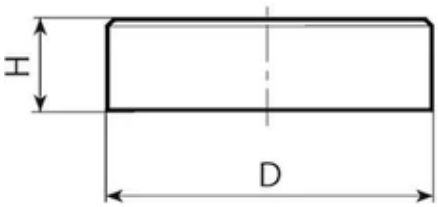

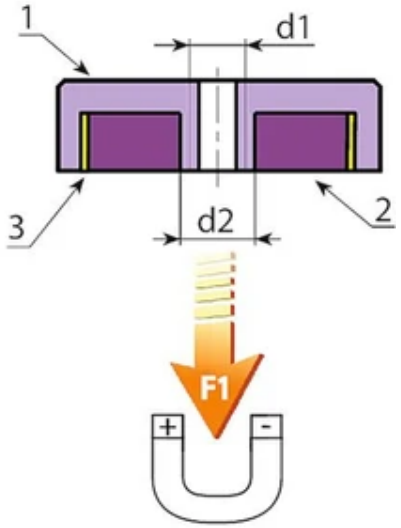

Code	art.	D ±0,1	H ±0,2	d2	d1 6H	Weight (g)	F1 (N)
T411010.0002	T411010.VZM03	10	4,5	4,5	M3	2	19
T411013.0002	T411013.VZM03	13	4,5	4,5	M3	4	40
T411020.0002	T411020.VZM04	20	6	6	M4	13	105

Code	art.	D ±0,1	H ±0,2	d2	d1 6H	Weight (g)	F1 (N)
T411025.0002	T411025.VZM04	25	7	4,5	M4	24	160
T411032.0002	T411032.VZM05	32	7	5,5	M5	40	330
T411040.0002	T411040.VZM05	40	8	10,5	M5	74	500
T411050.0001	T411050.VZM08	50	10	10,5	M8	140	800
T411063.0001	T411063.VZM10	63	14	11,7	M10	315	1.100
T411074.0001	T411074.VZM10	74,6	15	11,7	M10	479	1.750

T412

+280° -20° | SmCo | AVP | RoHS COMPLIANT

18 SAMARIUM-COBALT ROUND DISC MAGNET WITH STEEL SHELL AND SMOOTH THROUGH BORE

Magneti Samario (SaCo)

Materials:

(1) Turned free-cutting steel shell with smooth through bore.

(2) Flat samarium-cobalt magnet (SmCo).

(3) Plastic spacer.



Surface finish:

Smooth.

Colour:

Standard blue galvanising.

Special requests:

Upon request and for special quantities the steel shell of model T412 can be supplied black galvanised (720h salt spray resistance).

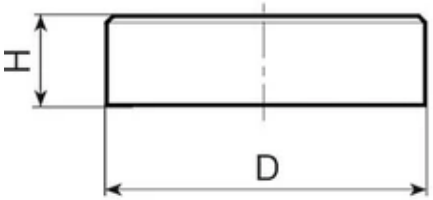

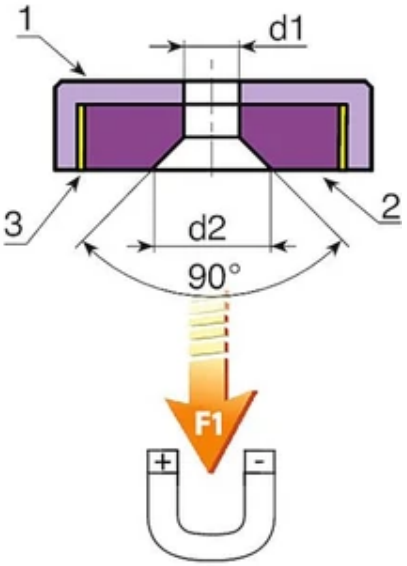

Code	art.	D ±0,1	H ±0,1	d2 +1	d1 ±0,1	Weight (g)	F1 (N)
T412016.0001	T412016.VZD03.5	16	4,5	6,6	3,5	6	57
T412020.0002	T412020.VZD04.5	20	6	9,3	4,5	13	81
T412025.0002	T412025.VZD04.5	25	7	9,2	4,5	25	105

Code	art.	D ±0,1	H ±0,1	d2 +1	d1 ±0,1	Weight (g)	F1 (N)
T412032.0002	T412032.VZD05.5	32	7	11,5	5,5	40	235
T412040.0002	T412040.VZD05.5	40	8	11,5	5,5	75	540

T412PIN

+350° -20° | SmCo | Aisi 304 | RoHS✓ COMPLIANT

18 SAMARIUM-COBALT ROUND DISC MAGNET WITH STAINLESS STEEL SHELL AND SMOOTH THROUGH BORE

Magneti Samario (SaCo)

Materials:
(1) Turned stainless steel shell (Aisi 304) with smooth through bore.
(2) Flat samarium-cobalt magnet (SmCo).
(3) Plastic spacer.



Surface finish:
Smooth.

Colour:
Natural.

Special requests:
None.

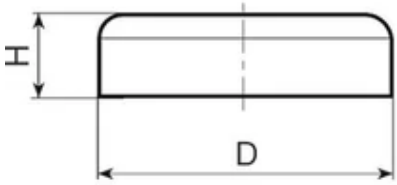

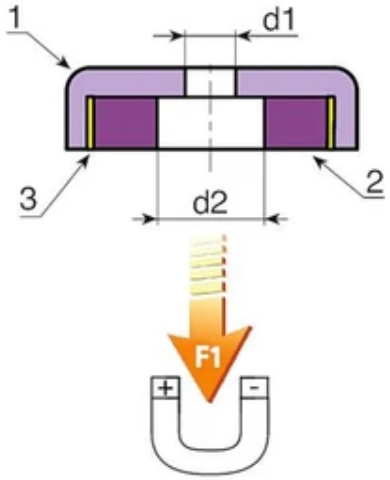

Code	art.	D ±0,1	H ±0,2	h	d2 ±0,1	d1 ±0,1	Weight (g)	F1 (N)
T412020.0001	T412020.HND04.5PIN	20	6	3,5	8	4,5	13	60
T412025.0001	T412025.HND04.5PIN	25	7	4	8	4,5	24	80
T412032.0001	T412032.HND05.5PIN	32	7	4	11	5,5	39	200
T412040.0001	T412040.HND05.5PIN	40	8	4	10,5	5,5	75	420

T413

+200° -20° | FERRITE | AVP | RoHS COMPLIANT

18 FERRITE ROUND DISC MAGNET WITH STEEL SHELL

Magneti Ferrite

Materials:

(1) Turned free-cutting steel shell.

(2) Flat ferrite magnet.

(3) Plastic spacer.



Surface finish:

Smooth.

Colour:

Standard blue galvanising.

Special requests:

Upon request and for special quantities the steel shell of model T413 can be supplied black galvanised (720h salt spray resistance).

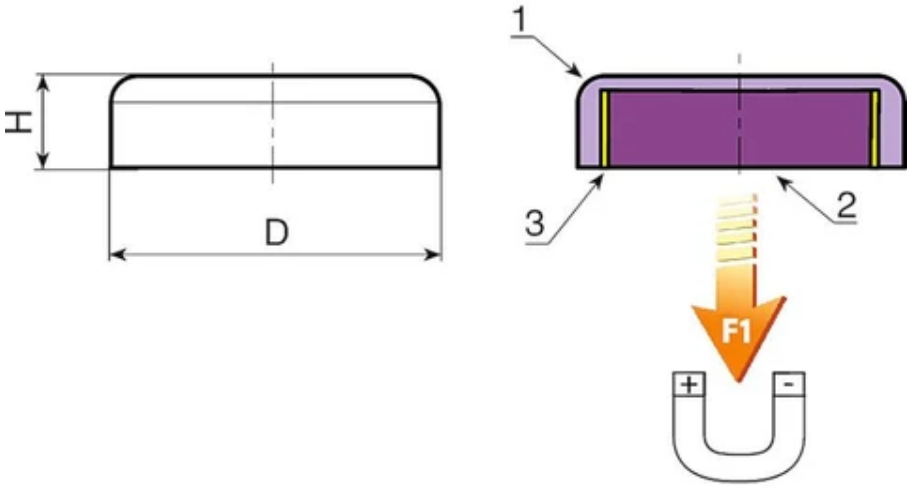

Code	art.	D	H	Weight (g)	F1 (N)
T413010.0001	T413010.VZ	10 ±0,1	4,5 +0,2/-0,1	2	4
T413013.0001	T413013.VZ	13 ±0,1	4,5 +0,2/-0,1	3	10
T413016.0001	T413016.VZ	16 ±0,1	4,5 +0,2/-0,1	5	18
T413020.0001	T413020.VZ	20 ±0,1	6 +0,2/-0,1	10	30

Code	art.	D	H	Weight (g)	F1 (N)
T413025.0001	T413025.VZ	25 ±0,1	7 +0,3/-0,2	18	40
T413032.0001	T413032.VZ	32 ±0,1	7 +0,3/-0,2	29	80
T413036.0001	T413036.VZ	36 +0,2/-0,1	7,7 +0,3/-0,2	39	100
T413040.0001	T413040.VZ	40 +0,2/-0,1	8 +0,4/-0,2	55	125
T413047.0001	T413047.VZ	47 +0,2/-0,1	9 +0,5/-0,2	84	180
T413050.0001	T413050.VZ	50 +0,2/-0,1	10 +0,5/-0,2	102	220
T413057.0001	T413057.VZ	57 +0,2/-0,1	10,5 +0,5/-0,2	141	280
T413063.0001	T413063.VZ	63 +0,3/-0,1	14 +0,5/-0,2	226	350
T413080.0001	T413080.VZ	80 +0,3/-0,1	18 +0,5/-0,2	468	600
T413100.0001	T413100.VZ	100 +0,5/-0,1	22 +0,5/-0,2	915	900
T413125.0001	T413125.VZ	125 +0,5/-0,1	26 +0,5/-0,2	1.680	1.300

T414

+80° -20° | NdFeB | AVP | RoHS COMPLIANT

18 NEODYMIUM ROUND DISC MAGNET WITH STEEL SHELL

Magneti Neodimio (NdFeB)

Materials:

(1) Turned free-cutting steel shell.

(2) Flat neodymium-iron-boron magnet (NdFeB).

(3) Plastic spacer.



Surface finish:

Smooth.

Colour:

Standard blue galvanising.

Special requests:

Upon request and for special quantities the steel shell of model T414 can be supplied black galvanised (720h salt spray resistance).

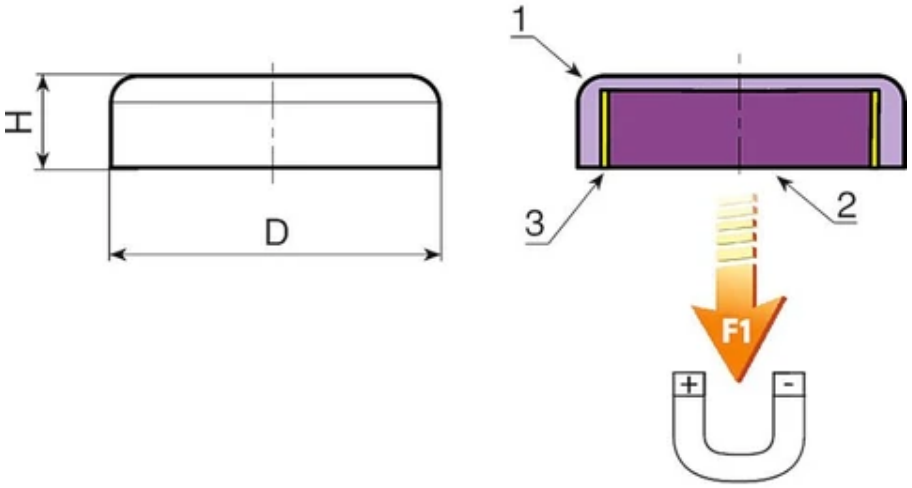

Code	art.	D ±0,1	H ±0,2	Weight (g)	F1 (N)
T414006.0001	T414006.VZ	06	4,5	1	5
T414008.0001	T414008.VZ	08	4,5	2	13
T414010.0001	T414010.VZ	10	4,5	2,5	25
T414013.0001	T414013.VZ	13	4,5	4	60

Code	art.	D ±0,1	H ±0,2	Weight (g)	F1 (N)
T414016.0001	T414016.VZ	16	4,5	6	95
T414020.0001	T414020.VZ	20	6	14	140
T414025.0001	T414025.VZ	25	7	25	200
T414032.0001	T414032.VZ	32	7	41	350

T415

+280° -20° | SmCo | AVP | RoHS✓ COMPLIANT

18 SAMARIUM-COBALT ROUND DISC MAGNET WITH STEEL SHELL

Magneti Samario (SaCo)

Materials:

(1) Turned free-cutting steel shell.

(2) Flat samarium-cobalt magnet (SmCo).

(3) Plastic spacer.



Surface finish:

Smooth.

Colour:

Standard blue galvanising.

Special requests:

Upon request and for special quantities the steel shell of model T415 can be supplied black galvanised (720h salt spray resistance).

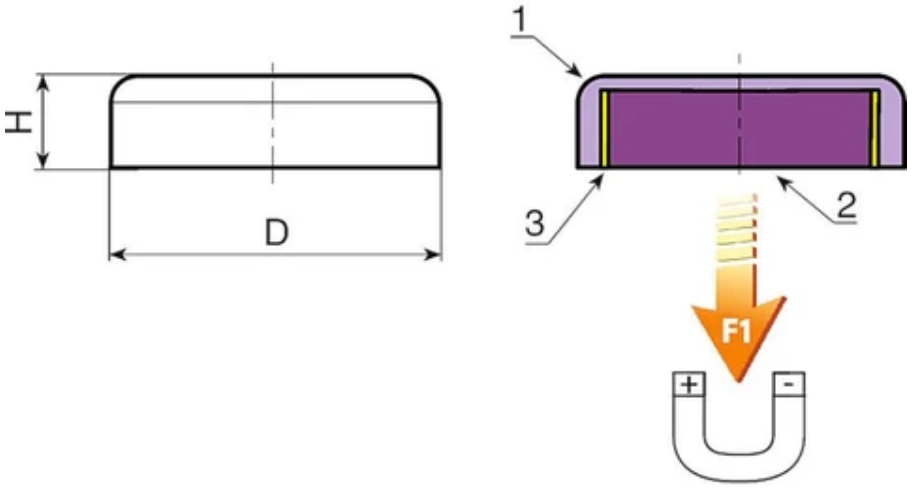

Code	art.	D ±0,1	H ±0,2	Weight (g)	F1 (N)
T415006.0001	T415006.VZ	06	4,5	1	5
T415008.0001	T415008.VZ	08	4,5	2	11
T415010.0001	T415010.VZ	10	4,5	3	20
T415013.0001	T415013.VZ	13	4,5	4	40

Code	art.	D ±0,1	H ±0,2	Weight (g)	F1 (N)
T415016.0001	T415016.VZ	16	4,5	7	60
T415020.0001	T415020.VZ	20	6	14	90
T415025.0001	T415025.VZ	25	7	26	150
T415032.0001	T415032.VZ	32	7	42	220

T416

+200° -20° | FERRITE | AVP | RoHS COMPLIANT

18 FERRITE ROUND DISC MAGNET WITH GALVANISED STEEL SHELL AND THREADED STUD

Magneti Ferrite

Materials:

(1) Turned free-cutting steel shell with threaded stud (thread tolerance 6g).

(2) Flat ferrite magnet.

(3) Plastic spacer.



Surface finish:

Smooth.

Colour:

Standard blue galvanising.

Special requests:

Upon request and for special quantities the steel shell of model T416 can be supplied black galvanised (720h salt spray resistance).

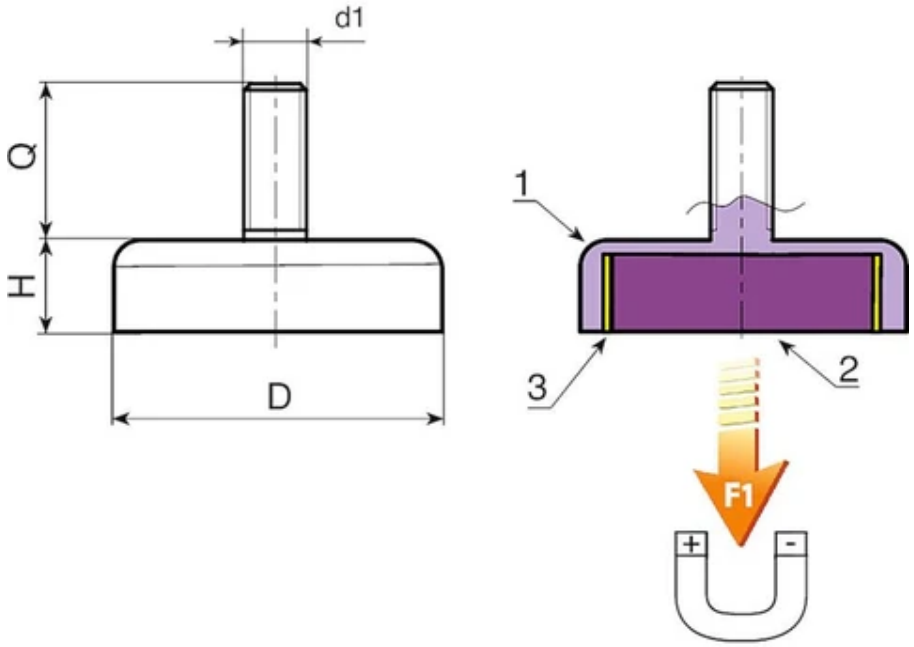

Code	art.	D	H ±0,2	d1 6g	Q ±0,5	Weight (g)	F1 (N)
T416010.0001	T416010.VZM03X07	10 ±0,1	4,5	M3	07	2	4
T416013.0001	T416013.VZM03X07	13 ±0,1	4,5	M3	07	3	10
T416016.0001	T416016.VZM03X07	16 ±0,1	4,5	M3	07	5	18

Code	art.	D	H ±0,2	d1 6g	Q ±0,5	Weight (g)	F1 (N)
T416016.0002	T416016.VZM04X06	16 ±0,1	4,5	M4	06	5	18
T416020.0001	T416020.VZM03X07	20 ±0,1	6	M3	07	10	30
T416020.0002	T416020.VZM06X30	20 ±0,1	6	M6	30	15	30
T416025.0001	T416025.VZM04X08	25 ±0,1	7	M4	08	19	40
T416025.0002	T416025.VZM05X15	25 ±0,1	7	M5	15	20	40
T416025.0003	T416025.VZM06X20	25 ±0,1	7	M6	20	22	40
T416032.0001	T416032.VZM04X08	32 ±0,1	7	M4	08	30	80
T416032.0002	T416032.VZM06X12	32 ±0,1	7	M6	12	31	80
T416032.0003	T416032.VZM08X10	32 ±0,1	7	M8	10	32	80
T416047.0001	T416047.VZM06X08	47 +0,2/-0,1	9	M6	08	85	180
T416057.0001	T416057.VZM06X08	57 +0,3/-0,1	10,5	M6	08	146	280
T416063.0001	T416063.VZM06X15	63 +0,3/-0,1	14	M6	15	233	350

T417

+80° -20° NdFeB AVP RoHS COMPLIANT

18 NEODYMIUM ROUND DISC MAGNET WITH GALVANISED STEEL SHELL AND THREADED STUD

Magneti Neodimio (NdFeB)

Materials:

(1) Turned free-cutting steel shell with threaded stud (thread tolerance 6g).

(2) Flat neodymium-iron-boron magnet (NdFeB).

(3) Plastic spacer.



Surface finish:

Smooth.

Colour:

Standard blue galvanising.

Special requests:

Upon request and for special quantities the steel shell of model T417 can be supplied black galvanised (720h salt spray resistance).

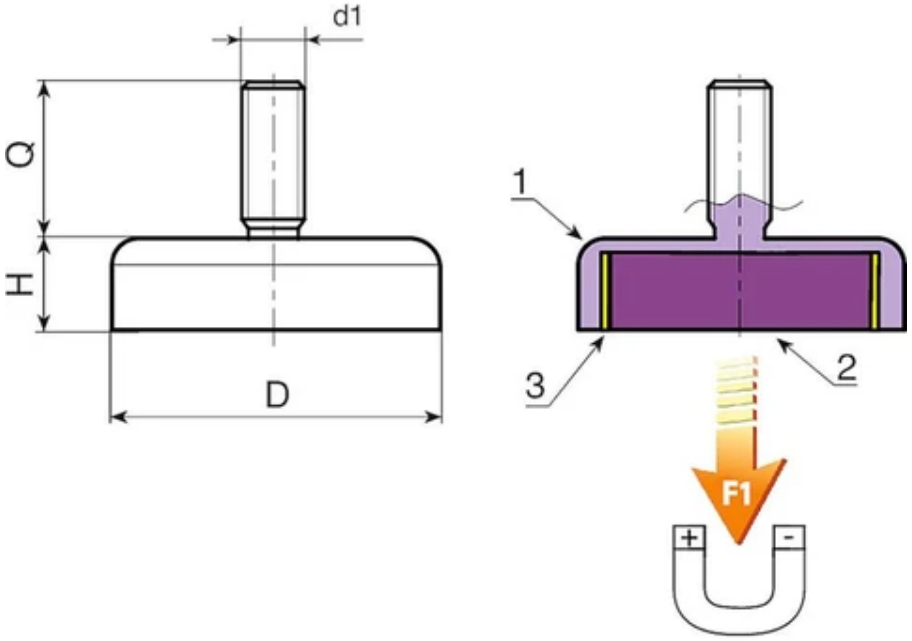

Code	art.	D ±0,1	H ±0,2	d1 6g	Q ±0,5	Weight (g)	F1 (N)
T417006.0001	T417006.VZM03X07	06	4,5	M3	07	1,3	5
T417008.0001	T417008.VZM04X08	08	4,5	M4	08	2,3	13
T417010.0001	T417010.VZM03X07	10	4,5	M3	07	2,5	25

Code	art.	D ±0,1	H ±0,2	d1 6g	Q ±0,5	Weight (g)	F1 (N)
T417010.0002	T417010.VZM04X08	10	4,5	M4	08	3	25
T417013.0001	T417013.VZM05X08	13	4.5	M5	08	5	60
T417016.0001	T417016.VZM06X08	16	4,5	M6	08	8	95
T417020.0001	T417020.VZM06X10	20	6	M6	10	15	140
T417025.0001	T417025.VZM06X10	25	7	M6	10	27	200
T417032.0001	T417032.VZM06X10	32	7	M6	10	42	350
T417040.0001	T417040.VZM08X12	40	8	M8	12	80	670

T418

+200° -20° | FERRITE | AVP | Aisi 304 | RoHS COMPLIANT

18 FERRITE ROUND DISC MAGNET WITH GALVANISED STEEL SHELL AND FEMALE THREADED STUD

Magneti Ferrite

Materials:

(2) Flat ferrite magnet.

(3) Plastic spacer.

T418:

(1) Turned free-cutting steel shell with female threaded stud.

T418CIN:

(1) Turned stainless steel shell (Aisi 304) with female threaded stud (thread tolerance 6H).



Surface finish:

Smooth.

Colour:

T418:

Standard blue galvanising.

T418CIN:

Natural.



Special requests:

Upon request and for special quantities the steel shell of model T418 can be supplied black galvanised (720h salt spray resistance).

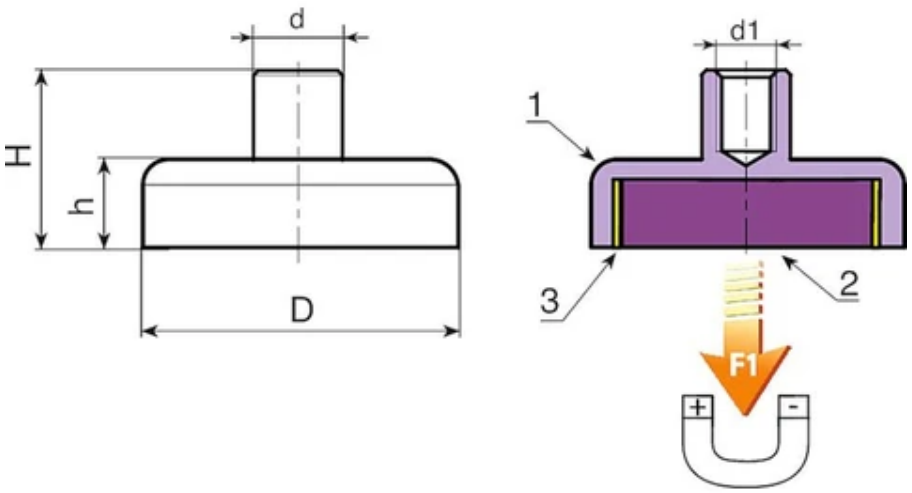

Version VZM: with galvanised shell

Code	art.	D	h	H	d ±0,2	d1 6H	Weight (g)	F1 (N)
T418010.0001	T418010.VZM03	10 ±0,1	4,5 +0,2/-0,1	11,5 +0,3/-0,2	6	M3	3	4
T418013.0001	T418013.VZM03	13 ±0,1	4,5 +0,2/-0,1	11,5 +0,3/-0,2	6	M3	4	10
T418016.0001	T418016.VZM03	16 ±0,1	4,5 +0,2/-0,1	11,5 +0,3/-0,2	6	M3	6	18
T418020.0001	T418020.VZM03	20 ±0,1	6 +0,2/-0,1	13 +0,3/-0,2	6	M3	11	30
T418025.0002	T418025.VZM04	25 ±0,1	7 +0,3/-0,2	15 +0,5/-0,3	8	M4	20	40
T418032.0002	T418032.VZM04	32 ±0,2	7 +0,3/-0,2	15 +0,5/-0,3	8	M4	31	80
T418036.0001	T418036.VZM04	36 ±0,2	7,7 +0,3/-0,2	16 +0,5/-0,3	8	M4	42	100
T418040.0002	T418040.VZM05	40 ±0,2	8 +0,3/-0,2	18 +0,5/-0,3	10	M5	59	125
T418047.0001	T418047.VZM06	47 ±0,2	9 +0,4/-0,2	20,5 +0,6/-0,3	12	M6	91	180
T418050.0002	T418050.VZM06	50 ±0,2	10 +0,4/-0,2	22 +0,6/-0,3	12	M6	111	220
T418057.0001	T418057.VZM06	57 ±0,2	10,5 +0,5/-0,2	22,5 +0,7/-0,3	12	M6	153	280
T418063.0002	T418063.VZM08	63 +0,3/-0,1	14 +0,5/-0,2	30 +0,7/-0,3	15	M8	245	350
T418080.0001	T418080.VZM10	80 +0,3/-0,1	18 +0,5/-0,2	34 +0,7/-0,3	20	M10	499	600
T418100.0001	T418100.VZM12	100 +0,5/-0,1	22 +0,5/-0,2	43 +0,7/-0,3	22	M12	956	900
T418125.0001	T418125.VZM14	125 +0,5/-0,1	26 +0,5/-0,2	50 +0,7/-0,3	25	M14	1.720	1.300

Version HNM: with stainless steel shell (Aisi 304)

Code	art.	D	h	H	d ±0,2	d1 6H	Weight (g)	F1 (N)
T418025.0001	T418025.HNM05CIN	25 ±0,1	7 +0,3/-0,2	16 +0,5/-0,3	8	M5	20	32
T418032.0001	T418032.HNM05CIN	32 ±0,2	7 +0,3/-0,2	16 +0,5/-0,3	8	M5	31	64

Code	art.	D	h	H	d ±0,2	d1 6H	Weight (g)	F1 (N)
T418040.0001	T418040.HNM05CIN	40 ±0,2	8 +0,3/-0,2	16,5 +0,5/-0,3	8	M5	56	100
T418050.0001	T418050.HNM05CIN	50 ±0,2	10 +0,4/-0,2	18,5 +0,6/-0,3	8	M5	105	175
T418063.0001	T418063.HNM05CIN	63 +0,3/-0,1	14 +0,5/-0,2	22 +0,7/-0,3	8	M5	228	280

T419

+80° -20° | NdFeB | AVP | RoHS COMPLIANT

18 NEODYMIUM ROUND DISC MAGNET WITH GALVANISED STEEL SHELL AND FEMALE THREADED STUD

Magneti Neodimio (NdFeB)

Materials:

(1) Turned free-cutting steel shell with female threaded stud (thread tolerance 6H).

(2) Flat ferrite magnet.

(3) Plastic spacer.



Surface finish:

Smooth.

Colour:

Standard blue galvanising.

Special requests:

Upon request and for special quantities the steel shell of model T419 can be supplied black galvanised (720h salt spray resistance).

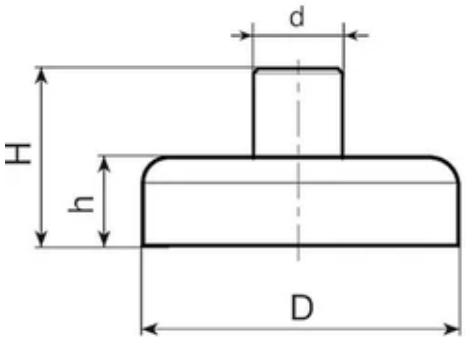

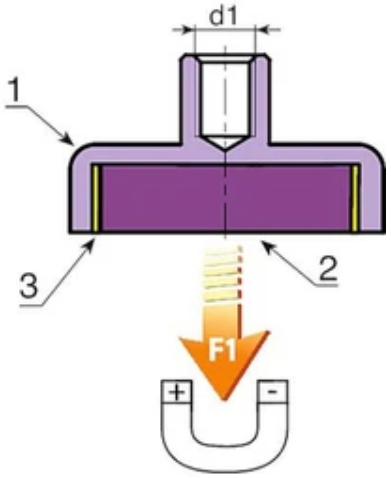

Code	art.	D	h ±0,2	H	d ±0,2	d1 6H	Weight (g)	F1 (N)
T419006.0001	T419006.VZM03	06 ±0,1	4,5	11,5 +0,3/-0,2	6	M3	2	5
T419008.0001	T419008.VZM03	08 ±0,1	4,5	11,5 +0,3/-0,2	6	M3	3	13
T419010.0001	T419010.VZM03	10 ±0,1	4,5	11,5 +0,3/-0,2	6	M3	4	25

Code	art.	D	h ±0,2	H	d ±0,2	d1 6H	Weight (g)	F1 (N)
T419013.0001	T419013.VZM03	13 ±0,1	4,5	11,5 +0,3/-0,2	6	M3	5	60
T419016.0001	T419016.VZM04	16 ±0,1	4,5	11,5 +0,3/-0,2	6	M4	7	95
T419020.0001	T419020.VZM04	20 ±0,1	6	13 +0,3/-0,2	8	M4	16	140
T419025.0001	T419025.VZM04	25 ±0,1	7	14 +0,5/-0,3	8	M4	27	200
T419032.0001	T419032.VZM05	32 ±0,2	7	15,5 +0,5/-0,3	10	M5	45	350
T419040.0001	T419040.VZM06	40 ±0,2	8	18 +0,5/-0,3	10	M6	80	670

T420

+200° -20° | SmCo | AVP | RoHS COMPLIANT

18 SAMARIUM-COBALT ROUND DISC MAGNET WITH GALVANISED STEEL SHELL AND FEMALE THREADED STUD

Magneti Samario (SaCo)

Materials:

(1) Turned free-cutting steel shell with female threaded stud (thread tolerance 6H).

(2) Flat samarium-cobalt magnet (SmCo).

(3) Plastic spacer.



Surface finish:

Smooth.

Colour:

Standard blue galvanising.

Special requests:

Upon request and for special quantities the steel shell of model T420 can be supplied black galvanised (720h salt spray resistance).

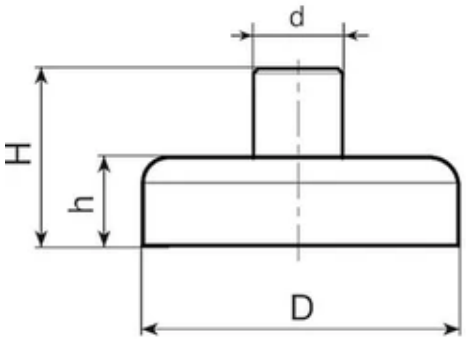

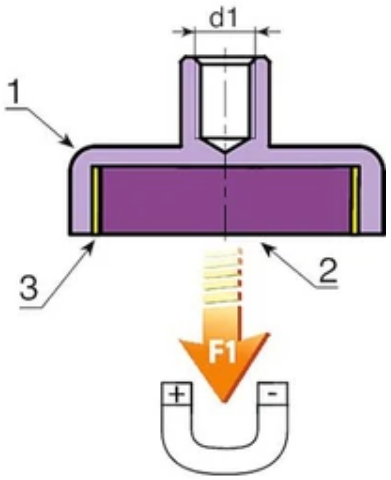

Code	art.	D +0,1	h ±0,2	H ±0,2	d ±0,2	d1 6H	Weight (g)	F1 (N)
T420006.0001	T420006.VZM03	06	4,5	11,5	6	M3	2	5
T420008.0001	T420008.VZM03	08	4,5	11,5	6	M3	3	11
T420010.0001	T420010.VZM03	10	4,5	11,5	6	M3	4	20

Code	art.	D +0,1	h ±0,2	H ±0,2	d ±0,2	d1 6H	Weight (g)	F1 (N)
T420013.0001	T420013.VZM03	13	4,5	11,5	6	M3	6	40
T420016.0001	T420016.VZM04	16	4,5	11,5	6	M4	7	60
T420020.0001	T420020.VZM04	20	6	13	8	M4	16	90
T420025.0001	T420025.VZM04	25	7	14	8	M4	28	150
T420032.0001	T420032.VZM05	32	7	15,5	10	M5	47	220

T423

+180° -40° | AlNiCo | C40 | RoHS✓ COMPLIANT

18 AlNiCo FLAT ROUND DISC MAGNET WITH PAINTED STEEL SHELL AND SMOOTH THROUGH BORE

Magneti (AlNiCo)

Materials:

(1) Standard steel shell.

(2) Flat aluminium-nickel-cobalt magnet (AlNiCo).

(3) Brass spacer.



Surface finish:

Painted.

Colour:

Red.

Special requests:

Upon request and for special quantities the steel shell can be supplied galvanised.

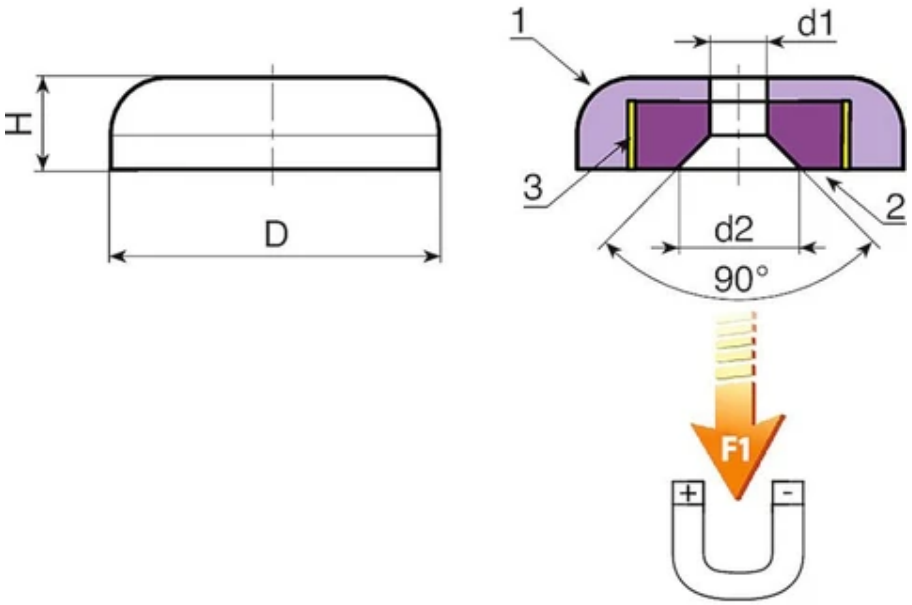

Code	art.	D ±1	H ±0,5	d2	d1	Weight (g)	F1 (N)
T423019.0001	T423019.SD03.716	19,1	7,5	8,7	3,7	17	30
T423028.0001	T423028.SD04.816	28,6	8,5	10,5	4,8	43	40
T423038.0001	T423038.SD04.816	38,1	10,4	10,5	4,8	82	80

T424

+180° -40° | AlNiCo | RoHS✓ COMPLIANT

18 PAINTED RED ONE-PIECE AlNiCo BRIDGE MAGNET

Magneti (AlNiCo)

Materials:

One-piece aluminium-nickel-cobalt bridge magnet (AlNiCo).

Surface finish:

Painted.

Colour:

Red.

Special requests:

The magnet can be supplied, upon request, unpainted with resistance to heat up to 400°C.

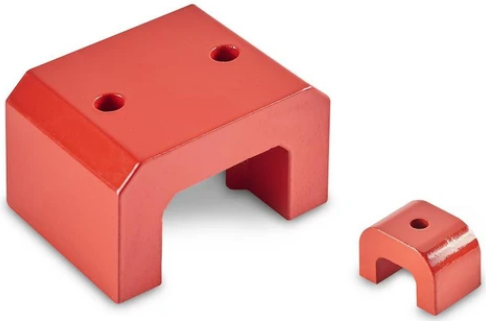

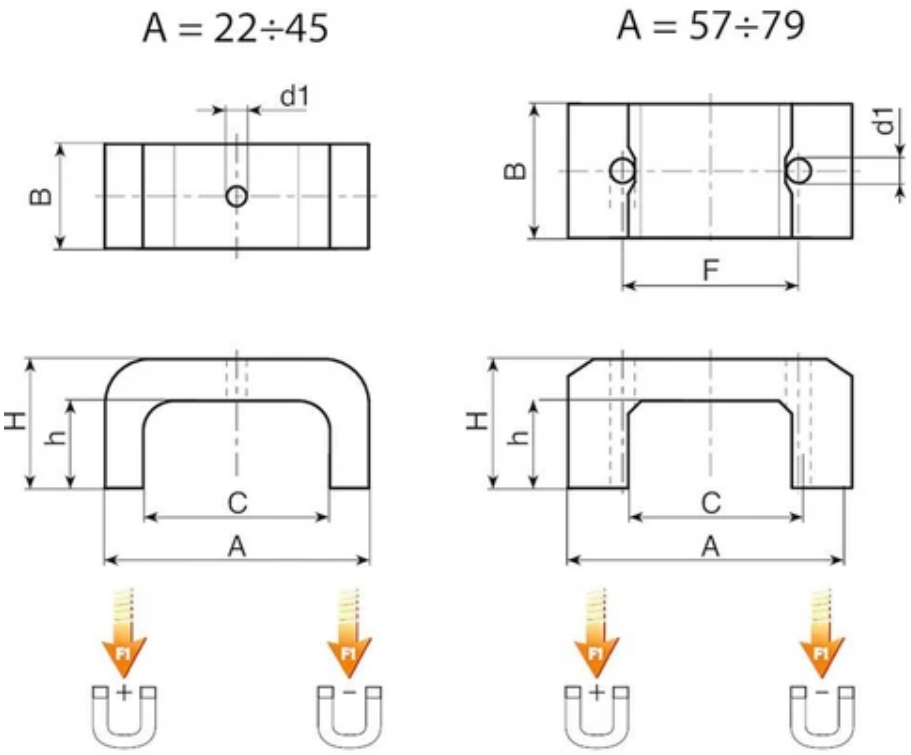

Code	art.	A	B	H	C	F	h	d1	Weight (g)	F1 (N)
T424022.0001	T424022.D7.016	22	25	17	8	-	9	7,0	64	30
T424030.0001	T424030.D5.016	30	20	20	15	-	11	5,0	56	45
T424039.0001	T424039.D4.716	39	25	25	19	-	14	4,7	140	90
T424045.0001	T424045.D5.216	45	30	30	22	-	17	5,2	209	120
T424057.0001	T424057.D8.016	57	44,5	35	27,8	35	23	8,0	500	180
T424070.0001	T424070.D8.016	70	57	41	35	41	25	8,0	905	320

Code	art.	A	B	H	C	F	h	d1	Weight (g)	F1 (N)
T424078.0001	T424078.D9.516	79,6	82	54	38,5	47,6	36	9,5	1.570	470

T425

+180° -40° | AlNiCo | RoHS✓ COMPLIANT

18 PAINTED RED ONE-PIECE AlNiCo HORSESHOE MAGNET

Magneti (AlNiCo)

Materials:
One-piece aluminium-nickel-cobalt (AlNiCo) horseshoe magnet.

Surface finish:
Painted.

Colour:
Red.

Special requests:
The magnet can be supplied, upon request, unpainted with resistance to heat up to 400°C.



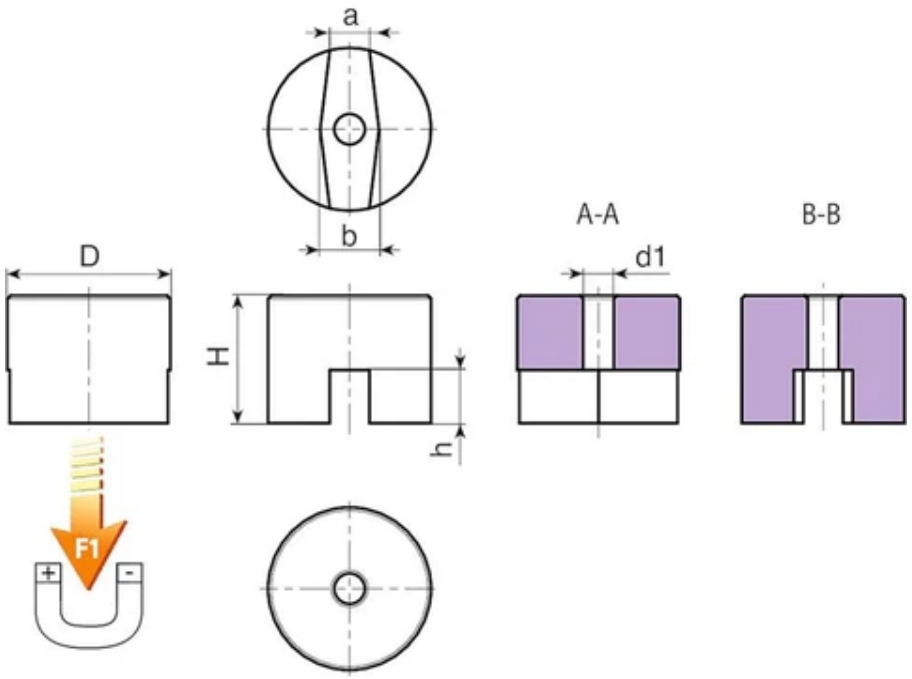

Code	art.	D	H	h	a	b	d1	Weight (g)	F1 (N)
T425013.0001	T425013.D04.516	13	9,7	5	4,5	7	4,5	9	7
T425019.0001	T425019.D04.816	19,1	12,7	6,5	5,6	8,7	4,8	25	18
T425025.0001	T425025.D04.516	25,4	20	8	5,6	8,5	4,5	72	40
T425032.0001	T425032.D07.516	31,8	25,4	12,7	8	12,7	7,5	132	66

T429

+200° -20° | SmCo | AVP | RoHS✓ COMPLIANT

18 SAMARIUM-COBALT CYLINDRICAL MAGNET WITH GALVANISED STEEL SHELL WITH h6 TOLERANCE

Magneti Samario (SaCo)



Materials:

(1) Turned free-cutting steel shell, with external tolerance h6.

(2) Cylindrical samarium-cobalt magnet (SmCo).

(3) Brass spacer.

Surface finish:

Smooth.

Colour:

Standard blue galvanising.

ATTENTION:

The magnet can be made shorter or machined to value k without sustaining damage.

Special requests:

None.

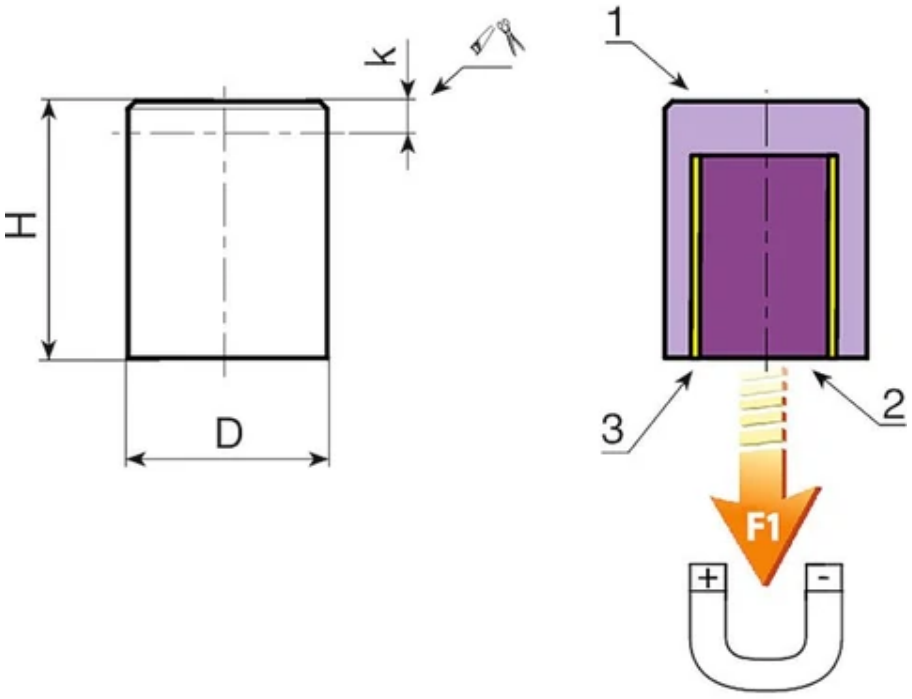

Code	art.	D h6	H ±0,2	k	Weight (g)	F1 (N)
T429004.0001	T429004.VZ	04	20	15	1	2

Code	art.	D h6	H ±0,2	k	Weight (g)	F1 (N)
T429005.0001	T429005.VZ	05	20	15	3	4
T429006.0001	T429006.VZ	06	20	15	4,5	6
T429008.0001	T429008.VZ	08	20	15	8	10
T429010.0001	T429010.VZ	10	16	11	10	25

T430

+450° -20° | AlNiCo | AVP | RoHS✓ COMPLIANT

18 ALUMINIUM-NICKEL-COBALT CYLINDRICAL MAGNET WITH GALVANISED STEEL SHELL

Magneti (AlNiCo)



Materials:

(1) Turned free-cutting steel shell.

(2) Cylindrical aluminium-nickel-cobalt magnet (AlNiCo).

(3) Brass spacer.

Surface finish:

Smooth.

Colour:

Standard blue galvanising.

ATTENTION:

The magnet can be made shorter or machined to value k without sustaining damage.

Special requests:

None.

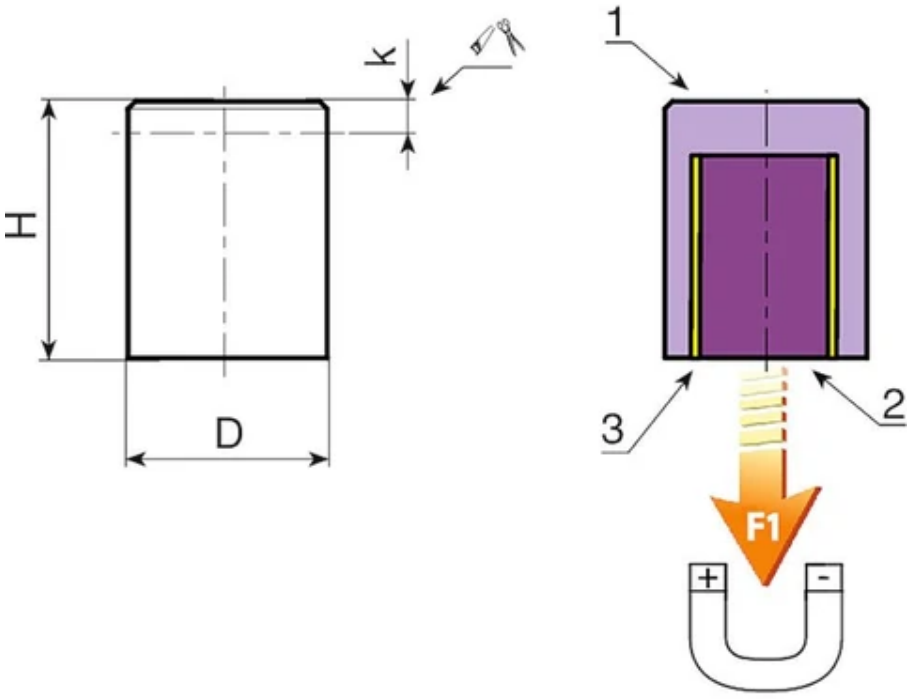

Code	art.	D ±0,1	H ±0,2	k	Weight (g)	F1 (N)
T430006.0001	T430006.VZ	06	20	12	4,5	2

Code	art.	D ±0,1	H ±0,2	k	Weight (g)	F1 (N)
T430008.0001	T430008.VZ	08	20	11	7,5	4
T430010.0001	T430010.VZ	10	20	10	12	8,5
T430013.0001	T430013.VZ	13	20	8	19	12
T430016.0001	T430016.VZ	16	20	6	30	20
T430020.0001	T430020.VZ	20	25	5	58	40
T430025.0001	T430025.VZ	25	35	13	125	60
T430032.0001	T430032.VZ	32	40	9	220	160
T430040.0001	T430040.VZ	40	50	10	440	240
T430050.0001	T430050.VZ	50	60	10	813	400
T430063.0001	T430063.VZ	63	65	10	1.306	660

T431

+450° -20° | AlNiCo | AVP | RoHS✓ COMPLIANT

18 ALUMINIUM-NICKEL-COBALT CYLINDRICAL MAGNET WITH GALVANISED STEEL SHELL WITH h6 TOLERANCE

Magneti (AlNiCo)



Materials:

(1) Turned free-cutting steel shell, with external tolerance h6.

(2) Cylindrical aluminium-nickel-cobalt magnet (AlNiCo).

(3) Brass spacer.

Surface finish:

Smooth.

Colour:

Standard blue galvanising.

ATTENTION:

The magnet can be made shorter or machined to value k without sustaining damage.

Special requests:

None.

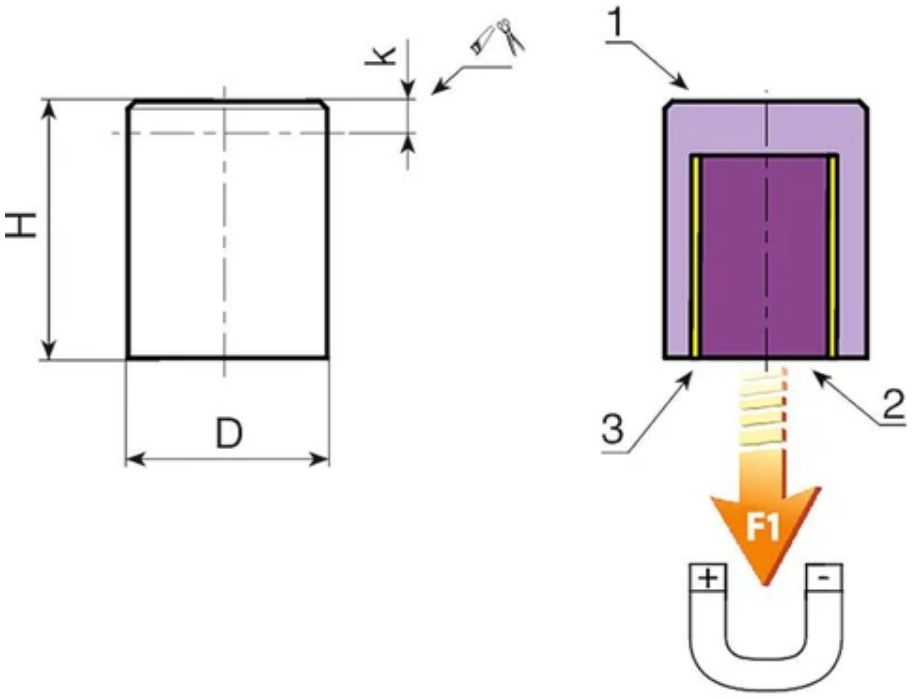

Code	art.	D h6	H ±0,2	k	Weight (g)	F1 (N)
T431006.0001	T431006.VZ	06	10	2	2	2

Code	art.	D h6	H ±0,2	k	Weight (g)	F1 (N)
T431008.0001	T431008.VZ	08	12	3	4,5	4
T431010.0001	T431010.VZ	10	16	6	9,5	8,5
T431013.0001	T431013.VZ	13	18	6	18	12
T431016.0001	T431016.VZ	16	20	6	30	20
T431020.0001	T431020.VZ	20	25	5	57	40
T431025.0001	T431025.VZ	25	30	7	106	60
T431032.0001	T431032.VZ	32	35	4	187	160
T431040.0001	T431040.VZ	40	45	5	390	240
T431050.0001	T431050.VZ	50	50	-	639	400
T431063.0001	T431063.VZ	63	60	5	1.175	660

T432

+80° -20° NdFeB AVP RoHS COMPLIANT

18 NEODYMIUM CYLINDRICAL MAGNET WITH GALVANISED STEEL SHELL

Magneti Neodimio (NdFeB)



Materials:

(1) Turned free-cutting steel shell.

(2) Cylindrical neodymium-iron-boron magnet (NdFeB).

(3) Plastic spacer.

Surface finish:

Smooth.

Colour:

Standard blue galvanising.

ATTENTION:

The magnet can be made shorter or machined to value k without sustaining damage.

Special requests:

None.

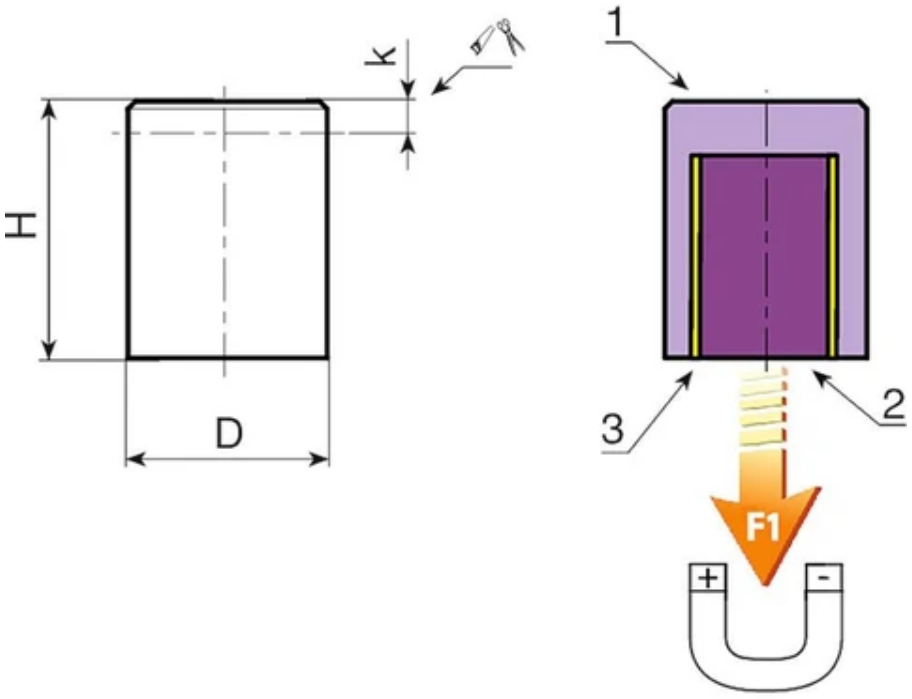

Code	art.	D ±0,1	H ±0,2	k	Weight (g)	F1 (N)
T432004.0001	T432004.VZ	04	20	15	2	2,5

Code	art.	D ±0,1	H ±0,2	k	Weight (g)	F1 (N)
T432005.0001	T432005.VZ	05	20	15	3	4,5
T432006.0001	T432006.VZ	06	20	15	4,5	6
T432008.0001	T432008.VZ	08	20	15	8	12
T432010.0001	T432010.VZ	10	20	15	12	24
T432013.0001	T432013.VZ	13	20	15	21	60
T432016.0001	T432016.VZ	16	20	15	31	90
T432020.0001	T432020.VZ	20	25	18	61	135
T432025.0001	T432025.VZ	25	35	27	133	190
T432032.0001	T432032.VZ	32	40	32	249	340

T433

+80° -20° NdFeB AVP RoHS COMPLIANT

18 NEODYMIUM CYLINDRICAL MAGNET WITH GALVANISED STEEL SHELL WITH h6 TOLERANCE

Magneti Neodimio (NdFeB)



Materials:

(1) Turned free-cutting steel shell, with external tolerance h6.

(2) Cylindrical neodymium-iron-boron magnet (NdFeB).

(3) Plastic spacer.

Surface finish:

Smooth.

Colour:

Standard blue galvanising.

ATTENTION:

The magnet can be made shorter or machined to value k without sustaining damage.

Special requests:

None.

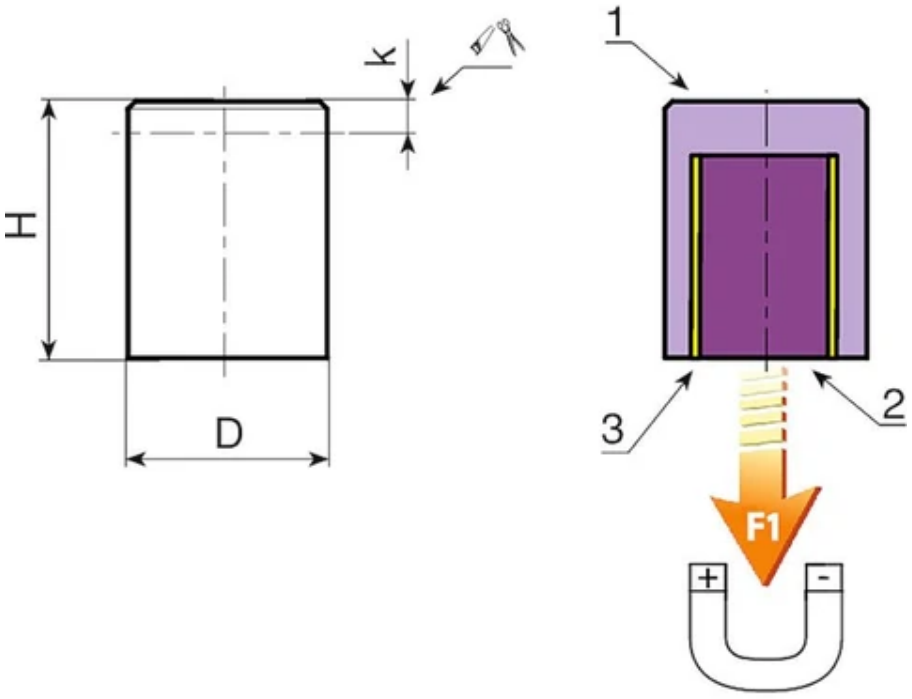

Code	art.	D h6	H ±0,2	k	Weight (g)	F1 (N)
T433004.0001	T433004.VZ	04	10	7	1	2,5

Code	art.	D h6	H ±0,2	k	Weight (g)	F1 (N)
T433005.0001	T433005.VZ	05	10	6	1,5	4,5
T433006.0001	T433006.VZ	06	10	5	2	6
T433008.0001	T433008.VZ	08	12	7	5	12
T433010.0001	T433010.VZ	10	16	11	10	24
T433013.0001	T433013.VZ	13	18	13	18	60
T433016.0001	T433016.VZ	16	20	15	31	90
T433020.0001	T433020.VZ	20	25	18	61	135
T433025.0001	T433025.VZ	25	30	22	114	190
T433032.0001	T433032.VZ	32	35	27	217	340

T434

+450° -20° | AlNiCo | AVP | RoHS✓ COMPLIANT

18 ALUMINIUM-NICKEL-COBALT CYLINDRICAL MAGNET WITH GALVANISED STEEL SHELL WITH FEMALE THREADED HOLE

Magneti (AlNiCo)

Materials:

(1) Turned free-cutting steel shell with female threaded hole (thread tolerance 6H).

(2) Cylindrical aluminium-nickel-cobalt magnet (AlNiCo).

(3) Brass spacer.

Surface finish:

Smooth.

Colour:

Standard blue galvanising.

Special requests:

None.



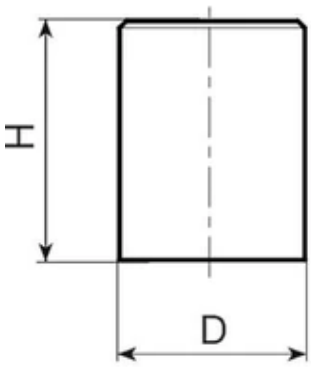

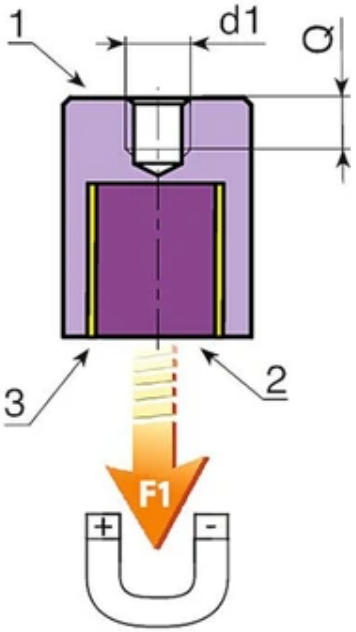

Code	art.	D ±0,1	H ±0,2	d1 6H	Q	Weight (g)	F1 (N)
T434006.0001	T434006.VZM03	06	20	M3	5	4	2
T434008.0001	T434008.VZM03	08	20	M3	5	7,5	4
T434010.0001	T434010.VZM04	10	20	M4	7	11	8,5

Code	art.	D ±0,1	H ±0,2	d1 6H	Q	Weight (g)	F1 (N)
T434013.0001	T434013.VZM04	13	20	M4	7	19	12
T434016.0001	T434016.VZM04	16	20	M4	5	30	20
T434020.0001	T434020.VZM06	20	25	M6	7	55	40
T434025.0001	T434025.VZM06	25	35	M6	9	121	60
T434032.0001	T434032.VZM08	32	40	M8	9	220	160
T434040.0001	T434040.VZM08	40	50	M8	12	436	240
T434050.0001	T434050.VZM10	50	60	M10	12	794	400
T434063.0001	T434063.VZM12	63	65	M12	14	1.274	660

T436

+80° -20° NdFeB AVP RoHS COMPLIANT

18 NEODYMIUM CYLINDRICAL MAGNET WITH GALVANISED STEEL SHELL WITH FEMALE THREADED HOLE

Magneti Neodimio (NdFeB)



Materials:

(1) Turned free-cutting steel shell with female threaded hole (thread tolerance 6H).

(2) Cylindrical neodymium-iron-boron magnet (NdFeB).

(3) Plastic spacer.

Surface finish:

Smooth.

Colour:

Standard blue galvanising.

Special requests:

None.

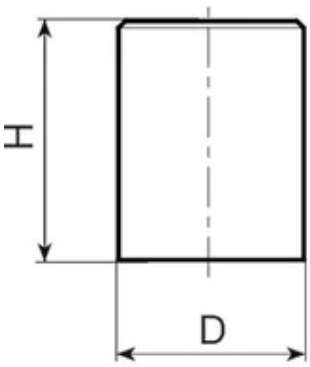

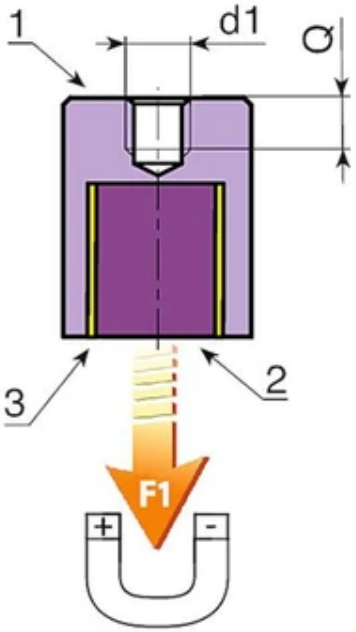

Code	art.	D ±0,1	H ±0,2	d1 6H	Q	Weight (g)	F1 (N)
T436006.0001	T436006.VZM03	06	20	M3	6	4	6
T436008.0001	T436008.VZM03	08	20	M3	5	7,5	12
T436010.0001	T436010.VZM04	10	20	M4	7	11	24

Code	art.	D ±0,1	H ±0,2	d1 6H	Q	Weight (g)	F1 (N)
T436013.0001	T436013.VZM04	13	20	M4	7	20	60
T436016.0001	T436016.VZM04	16	20	M4	7	30	90
T436020.0001	T436020.VZM06	20	25	M6	9	58	135
T436025.0001	T436025.VZM06	25	35	M6	9	131	190
T436032.0001	T436032.VZM08	32	40	M8	12	243	340
T436040.0001	T436040.VZM08	40	50	M8	12	480	700
T436050.0001	T436050.VZM10	50	60	M10	12	900	1.000
T436063.0001	T436063.VZM12	63	65	M12	14	1.560	1.700

T438

+450° -20° | AlNiCo | AVP | RoHS✓ COMPLIANT

18 ALUMINIUM-NICKEL-COBALT CYLINDRICAL MAGNET WITH GALVANISED STEEL SHELL WITH THREADED STUD

Magneti (AlNiCo)



Materials:

(1) Turned free-cutting steel shell with threaded stud and hexagonal fixing hole (thread tolerance 6g).

(2) Cylindrical aluminium-nickel-cobalt magnet (AlNiCo).

(3) Brass spacer.

Surface finish:

Smooth.

Colour:

Standard blue galvanising.

Special requests:

None.

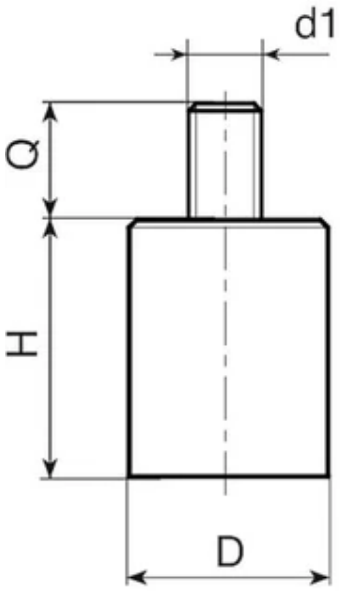

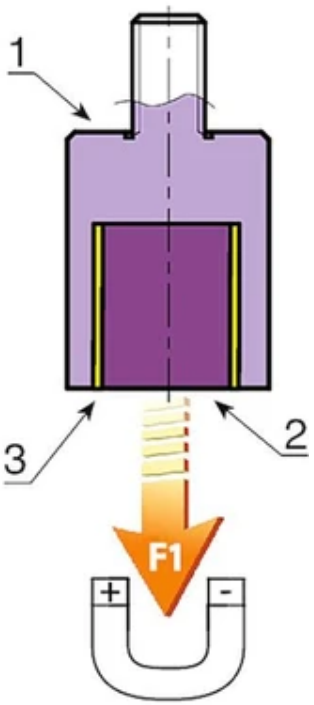

Code	art.	D ±0,1	H ±0,2	d1 6g	Q	Weight (g)	F1 (N)
T438006.0001	T438006.VZM03X07	06	20	M3	07	4,5	2
T438006.0001	T438006.VZM03X07	08	20	M3	07	8	4
T438010.0001	T438010.VZM04X08	10	20	M4	08	11,5	8,5

Code	art.	D ±0,1	H ±0,2	d1 6g	Q	Weight (g)	F1 (N)
T438013.0001	T438013.VZM04X08	13	20	M4	08	19,5	12
T438016.0001	T438016.VZM04X10	16	20	M4	10	31	20
T438020.0001	T438020.VZM06X10	20	25	M6	10	58	40
T438025.0001	T438025.VZM06X10	25	35	M6	10	124	60
T438032.0001	T438032.VZM08X12	32	40	M8	12	228	160
T438050.0001	T438050.VZM10X15	50	60	M10	15	807	400
T438063.0001	T438063.VZM12X20	63	65	M12	20	1.293	660

T440

+80° -20° NdFeB AVP RoHS COMPLIANT

18 NEODYMIUM CYLINDRICAL MAGNET WITH GALVANISED STEEL SHELL WITH THREADED STUD

Magneti Neodimio (NdFeB)



Materials:

(1) Turned free-cutting steel shell with threaded stud and hexagonal fixing hole (thread tolerance 6g).

(2) Cylindrical neodymium-iron-boron magnet (NdFeB).

(3) Brass spacer.

Surface finish:

Smooth.

Colour:

Standard blue galvanising.

Special requests:

None.

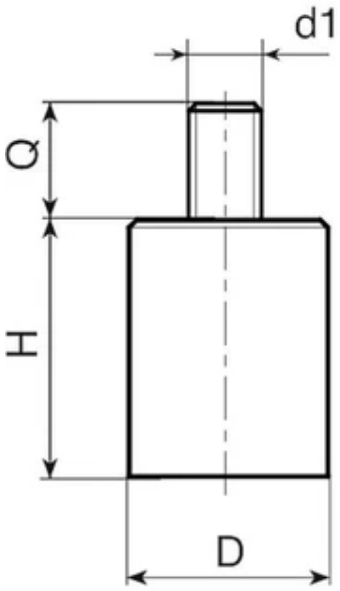

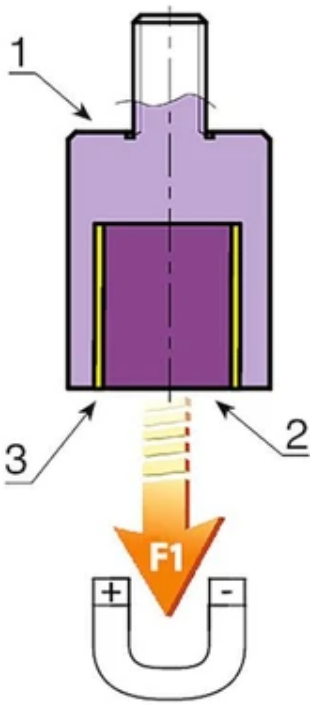

Code	art.	D ±0,1	H ±0,2	d1 6g	Q	Weight (g)	F1 (N)
T440006.0001	T440006.VZM03X07	06	20	M3	07	4	6
T440006.0001	T440006.VZM03X07	08	20	M3	07	7,5	12
T440010.0001	T440010.VZM04X08	10	20	M4	08	11	24

Code	art.	D ±0,1	H ±0,2	d1 6g	Q	Weight (g)	F1 (N)
T440013.0001	T440013.VZM04X08	13	20	M4	08	20	60
T440016.0001	T440016.VZM04X10	16	20	M4	10	30	90
T440020.0001	T440020.VZM06X10	20	25	M6	10	58	135
T440032.0001	T440032.VZM08X12	32	40	M8	12	243	340
T440050.0001	T440050.VZM10X15	50	60	M10	15	915	1.000
T440063.0001	T440063.VZM12X20	63	65	M12	20	1.579	1.700

T442

+450° -20° AlNiCo RoHS COMPLIANT

18 CYLINDRICAL ALUMINIUM-NICKEL-COBALT MAGNET

Magneti (AlNiCo)

Materials:
Cylindrical aluminium-nickel-cobalt magnet (AlNiCo).

Surface finish:
Smooth.

Colour:
Natural.

Special requests:
None.



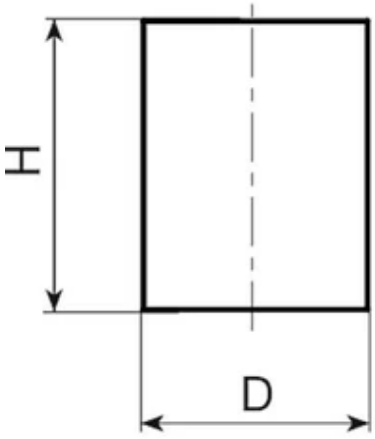

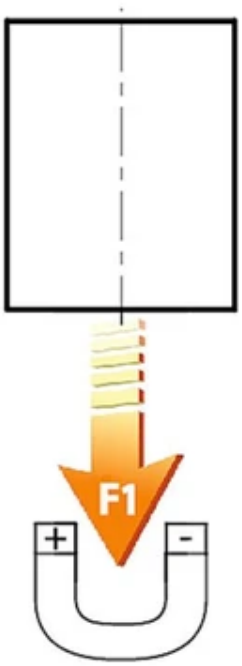

Code	art.	D +0/-0,2	H	Weight (g)	F1 (N)
-	T442003.N10	3	10 ±0,1	0,6	1,1
-	T442003.N12	3	12 ±0,1	0,6	1,3
-	T442004.N16	4	16 ±0,1	1,4	1,9
-	T442004.N20	4	20 ±0,1	1,7	2
-	T442005.N20	5	20 ±0,1	2,6	2,3
-	T442006.N15	6	15 ±0,1	3	2,8

Code	art.	D +0/-0,2	H	Weight (g)	F1 (N)
-	T442006.N24	6	24 ±0,1	4	2,8
-	T442006.N30	6	30 ±0,1	6	2,8
-	T442008.N25	8	25 ±0,1	9	3,8
-	T442010.N20	10	20 ±0,1	11	5
-	T442010.N40	10	40 ±0,1	23	7
-	T442012.N40	12	40 ±0,1	33	8
-	T442015.N30	15	30 ±0,1	39	10
-	T442015.N60	15	60 ±0,2	76	11
-	T442020.N80	20	80 ±0,2	182	38
-	T442034.N80	34	80 ±0,2	527	61