P180

NEW | +60° -20° | HDPE | RoHS COMPLIANT

16 ROUND PLUG FOR TUBE WITH THREADED THROUGH HOLE (LIGHT DUTY SERIES)

Tappi con foro filettato

Materials:
Round plug with round lamellar insert in Polyethylene (HDPE).

Surface finish:
Satin.

Colour:
Black (RAL 9011).

Fixing method:
Push-fit.

Special requests:
None.

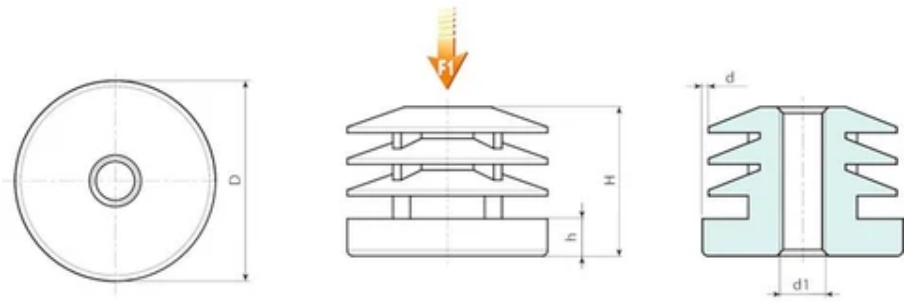

Code	art.	D	H	h	d thickness of the tube (min - max)	d1 6H	Weight (g)
P180018.0001	P180018.EM0801	18	24	6	1-1,5	M8	-
P180018.0002	P180018.EM1001	18	24	6	1-1,5	M10	-
P180020.0001	P180020.EM0801	20	24	6	1-1,5	M8	-

Code	art.	D	H	h	d thickness of the tube (min - max)	d1 6H	Weight (g)
P180020.0002	P180020.EM1001	20	24	6	1-1,5	M10	-
P180022.0001	P180022.EM0801	22	25	6	1-1,5	M8	-
P180022.0002	P180022.EM1001	22	25	6	1-1,5	M10	-
P180025.0001	P180025.EM0801	25	25	6	1-1,5	M8	-
P180025.0002	P180025.EM1001	25	25	6	1-1,5	M10	-
P180028.0001	P180028.EM0801	28	25	6	1-1,5	M8	-
P180028.0002	P180028.EM1001	28	25	6	1-1,5	M10	-
P180030.0001	P180030.EM0801	30	25	6	1-1,5	M8	-
P180030.0002	P180030.EM1001	30	25	6	1-1,5	M10	-
P180032.0001	P180032.EM0801	32	25	6	1-1,5	M8	-
P180032.0002	P180032.EM1001	32	25	6	1-1,5	M10	-
P180035.0001	P180035.EM0801	35	26	6	1-1,5	M8	-
P180035.0002	P180035.EM1001	35	26	6	1-1,5	M10	-
P180040.0001	P180040.EM0801	40	26	6	1-1,5	M8	-
P180040.0002	P180040.EM1001	40	26	6	1-1,5	M10	-
P180045.0001	P180045.EM0801	45	29	6	1-1,5	M8	-
P180045.0002	P180045.EM1001	45	29	6	1-1,5	M10	-
P180050.0001	P180050.EM0801	50	27	6	1-1,5	M8	-
P180050.0002	P180050.EM1001	50	27	6	1-1,5	M10	-
P180060.0001	P180060.EM0801	60	32	7	1-1,5	M8	-
P180060.0002	P180060.EM1001	60	32	7	1-1,5	M10	-
P180080.0001	P180080.EM0801	80	39	8	1-1,5	M8	-
P180080.0002	P180080.EM1001	80	39	8	1-1,5	M10	-

P181

NEW | +60° -20° | HDPE | RoHS COMPLIANT

16 SQUARE PLUG FOR TUBE WITH THREADED THROUGH HOLE (LIGHT DUTY SERIES)

Tappi con foro filettato

Materials:
Square plug with round lamellar insert in Polyethylene (HDPE).

Surface finish:
Satin.

Colour:
Black (RAL 9011).

Fixing method:
Push-fit.

Special requests:
None.

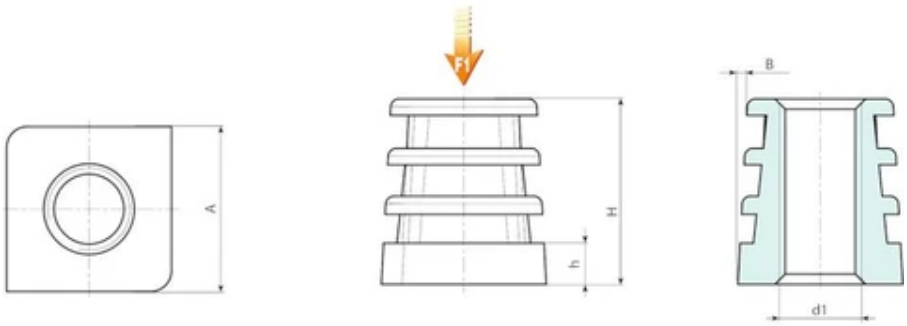

Code	art.	A	H	h	B thickness of the tube (min - max)	d1 6H	Weight (g)
P181015.0001	P181015.EM0801	15	23	5	1-1,5	M8	-
P181016.0001	P181016.EM0801	16	23	5	1-1,5	M8	-
P181016.0002	P181016.EM1001	16	23	5	1-1,5	M10	-

Code	art.	A	H	h	B thickness of the tube (min - max)	d1 6H	Weight (g)
P181018.0001	P181018.EM0801	18	23	5	1-1,5	M8	-
P181018.0002	P181018.EM1001	18	23	5	1-1,5	M10	-
P181020.0001	P181020.EM0801	20	23	5	1-1,5	M8	-
P181020.0002	P181020.EM1001	20	23	5	1-1,5	M10	-
P181022.0001	P181022.EM0801	22	23	5	1-1,5	M8	-
P181022.0002	P181022.EM1001	22	23	5	1-1,5	M10	-
P181025.0001	P181025.EM0801	25	24	5	1-1,5	M8	-
P181025.0002	P181025.EM1001	25	24	5	1-1,5	M10	-
P181030.0001	P181030.EM0801	30	26	6	1-1,5	M8	-
P181030.0002	P181030.EM1001	30	26	6	1-1,5	M10	-
P181035.0001	P181035.EM0801	35	27	6	1-1,5	M8	-
P181035.0002	P181035.EM1001	35	27	6	1-1,5	M10	-
P181040.0001	P181040.EM0801	40	28	6	1-1,5	M8	-
P181040.0002	P181040.EM1001	40	28	6	1-1,5	M10	-
P181050.0001	P181050.EM0801	50	37	7	1-1,5	M8	-
P181050.0002	P181050.EM1001	50	37	7	1-1,5	M10	-
P181060.0001	P181060.EM0801	60	32	7	1-1,5	M8	-
P181060.0002	P181060.EM1001	60	32	7	1-1,5	M10	-
P181080.0001	P181080.EM0801	80	38	8	1-1,5	M8	-

P200

+80° -20° HDPE RoHS COMPLIANT

16 KNURLED MOUNTING FOOT WITH FIXED THREADED STUD

Piedi con prigioniero fisso

Materials:
High density polyethylene.

Surface finish:
Satin.

Colour:
Black (RAL 9011).

Inserts:
Galvanised steel threaded stud (thread tolerance 6g).

Special requests:
Upon request and for special quantities inserts can be supplied with customised lengths (minimum quantity 10,000).

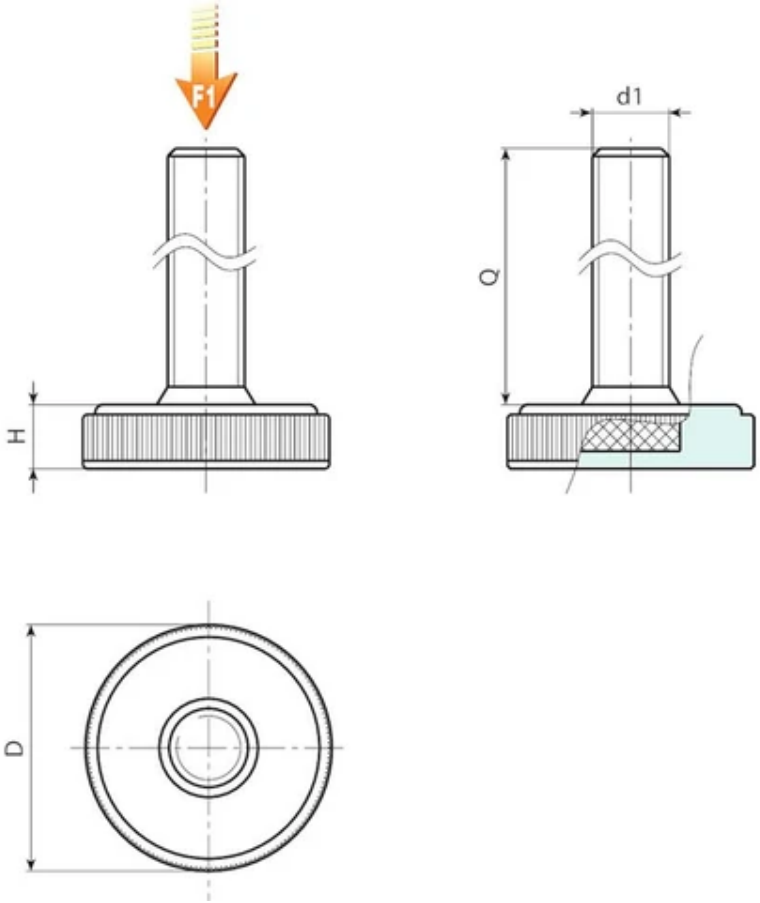

Code	Art.	D	H	d1 6g	Q	Weight (g)	F1 (N)
P20025.0001	P20025.TM06X1701	25	6	M6	17	7	1000
P20025.0002	P20025.TM08X2501	25	6	M8	25	14	1000
P20025.0003	P20025.TM10X3501	25	6	M10	35	25	1000
P20035.0001	P20035.TM08X2501	35	8	M8	25	18	1000

Code	Art.	D	H	d1 6g	Q	Weight (g)	F1 (N)
P20035.0002	P20035.TM10X2501	35	8	M10	25	25	1000
P20035.0005	P20035.TM10X4001	35	8	M10	40	32	1000
P20040.0001	P20040.TM10X3501	40	9	M10	35	35	1000
P20050.0001	P20050.TM10X3501	50	10	M10	35	40	1000
P20060.0001	P20060.TM10X3501	60	10.5	M10	35	50	1000

Attention: The expressed load limit F1 is lower than the break load by 30% and is intended as static.

P201

+80° -20° HDPE RoHS COMPLIANT

16

MOUNTING FOOT WITH REVOLVING THREADED STUD

Piedi con stelo girevole

Materials:
High density polyethylene.

Surface finish:
Satin.

Colour:
Black (RAL 9011).

Inserts:
Revolving threaded stud in galvanised steel (thread tolerance 6g).

Special requests:
Upon request and for special quantities inserts can be supplied with customised lengths (minimum quantity 10,000).

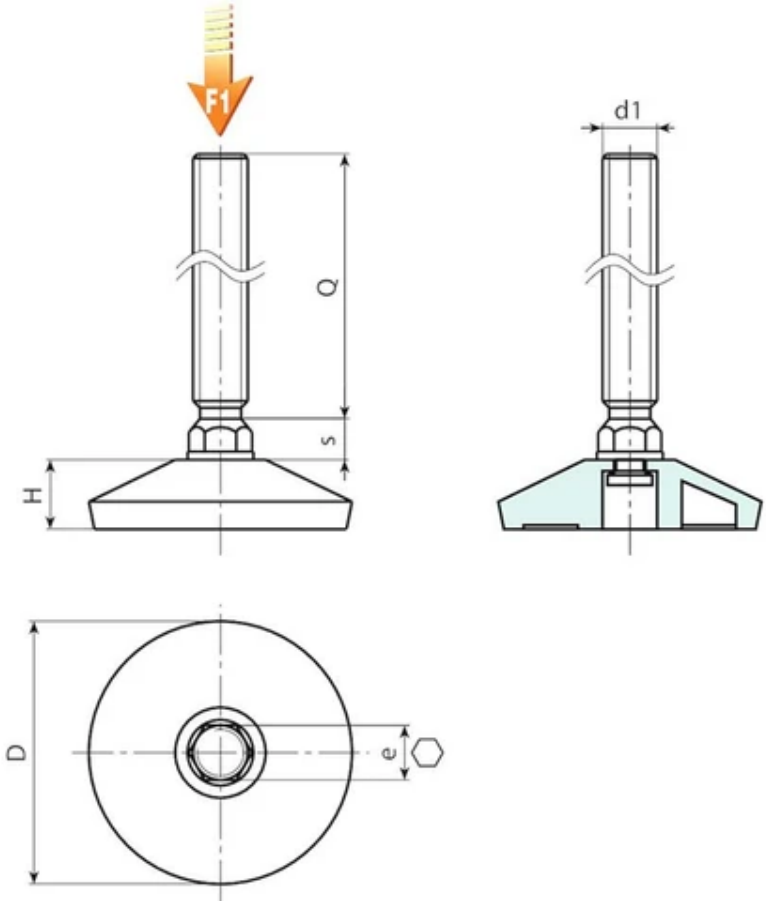

Code	Art.	D	H	e	s	d1 6g	Q	Weight (g)	F1 (N)
P20140.0001	P20140.TM10X2501	37	11.5	10	6	M10	25	28	2000
P20150.0001	P20150.TM10X3001	48.5	12.5	10	6	M10	30	35	2000
P20150.0002	P20150.TM12X3501	49	13	12	6	M12	34	48	2000

Attention: The expressed load limit F1 is lower than the break load by 30% and is intended as static.

P202

+80° -20° HDPE RoHS COMPLIANT

16 MOUNTING FOOT WITH FIXED THREADED STUD

Piedi con prigioniero fisso

Materials:
High density polyethylene.

Surface finish:
Satin.

Colour:
Black (RAL 9011).

Inserts:
Galvanised steel threaded stud (thread tolerance 6g).

Special requests:
Upon request and for special quantities inserts can be supplied with customised lengths (minimum quantity 10,000).

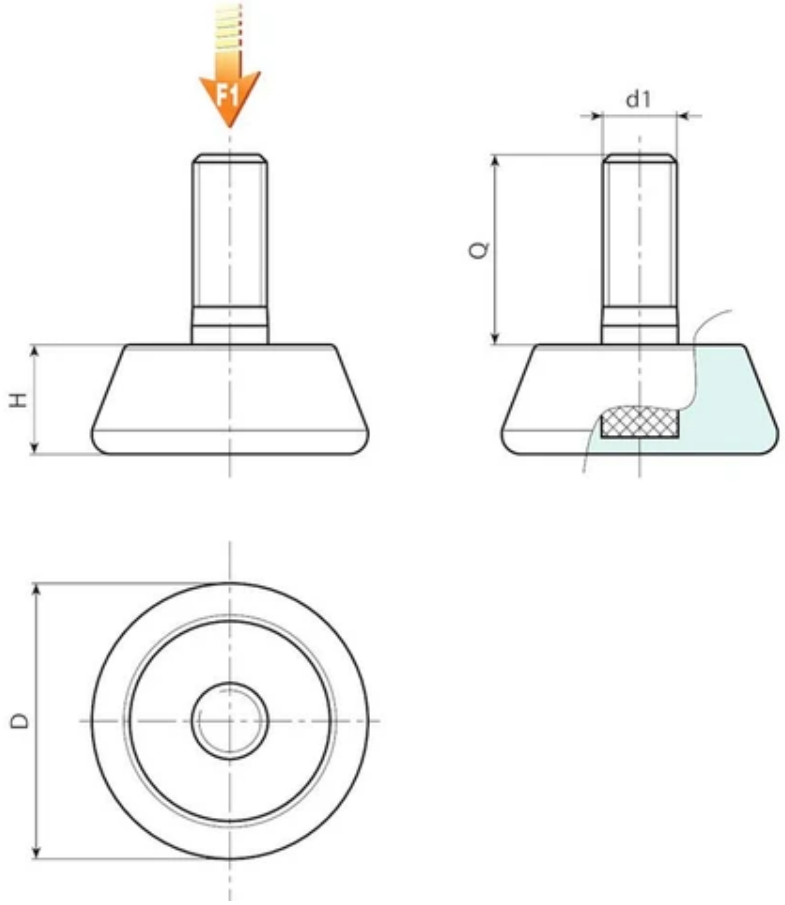

Code	Art.	D	H	d1 6g	Q	Weight (g)	F1 (N)
P20230.0001	P20230.TM08X2001	29	11.5	M8	20	17	1000
P20230.0002	P20230.TM10X2001	29	11.5	M10	20	20	1000
P20240.0001	P20240.TM08X2501	40	13.5	M8	25	29	1000
P20240.0002	P20240.TM10X2501	40	13.5	M10	25	33	1000

Code	Art.	D	H	d1 6g	Q	Weight (g)	F1 (N)
P20250.0001	P20250.TM10X3501	48.5	16.5	M10	35	54	1000
P20250.0002	P20250.TM12X3501	48.5	16.5	M12	35	65	1000
P20260.0001	P20260.TM10X3701	60	18,5	M10	37	78	1000
P20260.0002	P20260.TM12X3701	60	18,5	M12	37	80	1000

Attention: The expressed load limit F1 is lower than the break load by 30% and is intended as static.

P203

+80° -20° HDPE RoHS COMPLIANT

16 MOUNTING FOOT WITH REVOLVING THREADED STUD

Piedi con stelo girevole

Materials:
High density polyethylene.

Surface finish:
Satin.

Colour:
Black (RAL 9011).

Inserts:
Revolving threaded stud in galvanised steel (thread tolerance 6g).

Special requests:
None.

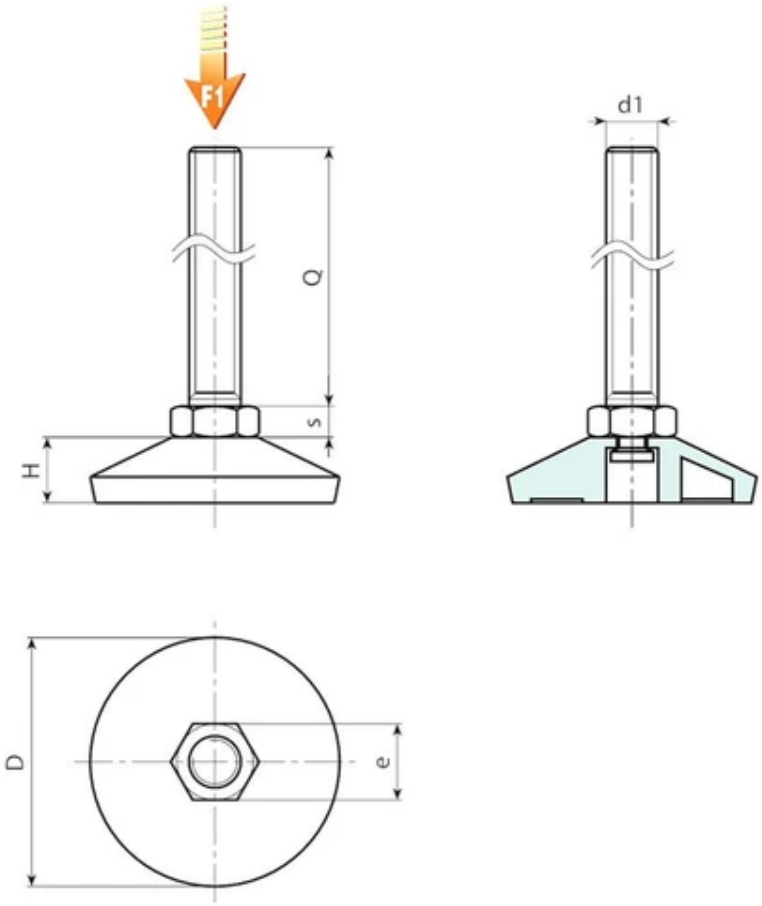

Code	Art.	D	H	e	s	d1 6g	Q	Weight (g)	F1 (N)
P20340.0001	P20340.TM10X4001	37	11.5	17	6.5	M10	40	39	2000
P20340.0003	P20340.TM10X6001	37	11.5	17	6.5	M10	60	49	2000
P20350.0001	P20350.TM10X4001	49	13	17	6.5	M10	40	44	2000
P20350.0002	P20350.TM10X6001	49	13	17	6.5	M10	60	54	2000

Attention: The expressed load limit F1 is lower than the break load by 30% and is intended as static.

P280

NEW | +60° -20° | HDPE | RoHS COMPLIANT

16 ROUND PLUG FOR TUBE WITH INSERT WITH THREADED THROUGH HOLE (MEDIUM DUTY SERIES)

Tappi con foro filettato

Materials:
Round plug with round lamellar insert in Polyethylene (HDPE).

Surface finish:
Satin.

Colour:
Black (RAL 9011).

Inserts:
Galvanised steel threaded nut DIN 934.

Fixing method:
Push-fit.

Special requests:
None.

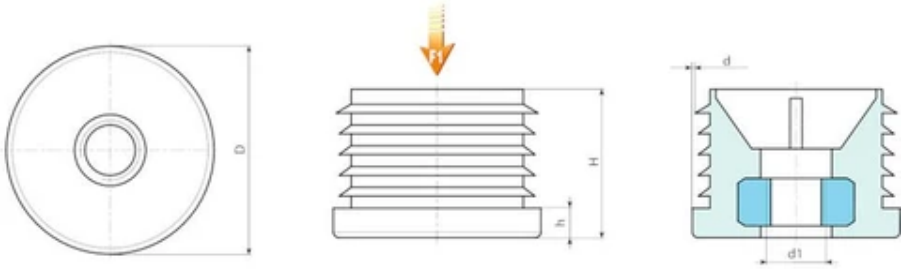

Code	art.	D	H	h	d thickness of the tube (min - max)	d1 6H	Weight (g)
P280019.0001	P280019.EM0601	19	25	5	1-1,5	M6	-

Code	art.	D	H	h	d thickness of the tube (min - max)	d1 6H	Weight (g)
P280020.0001	P280020.EM0601	20	25	5	1-1,5	M6	-
P280020.0002	P280020.EM0801	20	25	5	1-1,5	M8	-
P280025.0001	P280025.EM0601	25	25	5	1-1,5	M6	-
P280025.0002	P280025.EM0801	25	25	5	1-1,5	M8	-
P280030.0001	P280030.EM0801	30	25	5	1-1,5	M8	-
P280030.0002	P280030.EM1001	30	25	5	1-1,5	M10	-
P280032.0001	P280032.EM0801	32	25	5	1-1,5	M8	-
P280032.0002	P280032.EM1001	32	25	5	1-1,5	M10	-
P280035.0001	P280035.EM0801	35	25	5	1-1,5	M8	-
P280035.0002	P280035.EM1001	35	25	5	1-1,5	M10	-
P280038.0001	P280038.EM0801	38	25	5	1-1,5	M8	-
P280038.0002	P280038.EM1001	38	25	5	1-1,5	M10	-
P280038.0003	P280038.EM1201	38	25	5	1-1,5	M12	-
P280040.0001	P280040.EM0801	40	25	5	1-1,5	M8	-
P280040.0002	P280040.EM1001	40	25	5	1-1,5	M10	-
P280040.0003	P280040.EM1201	40	25	5	1-1,5	M12	-
P280050.0001	P280050.EM0801	50	25	5	1-1,5	M8	-
P280050.0002	P280050.EM1001	50	25	5	1-1,5	M10	-
P280050.0003	P280050.EM1201	50	25	5	1-1,5	M12	-
P280060.0001	P280060.EM0801	60	25	5	1-1,5	M8	-
P280060.0002	P280060.EM1001	60	25	5	1-1,5	M10	-
P280060.0003	P280060.EM1201	60	25	5	1-1,5	M12	-

P281

NEW | +60° -20° | HDPE | RoHS COMPLIANT

16 SQUARE PLUG FOR TUBE WITH INSERT WITH THREADED THROUGH HOLE (MEDIUM DUTY SERIES)

Tappi con foro filettato

Materials:
Square plug with round lamellar insert in Polyethylene (HDPE).

Surface finish:
Satin.

Colour:
Black (RAL 9011).

Inserts:
Galvanised steel threaded nut DIN 934.

Fixing method:
Push-fit.

Special requests:
None.

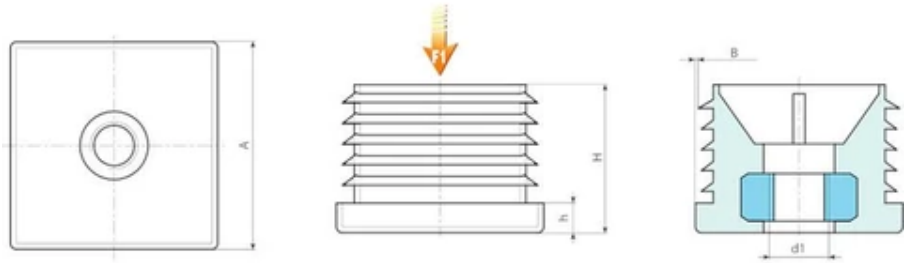

Code	art.	A	H	h	B thickness of the tube (min - max)	d1 6H	Weight (g)
P281019.0001	P281019.EM0601	19	25	5	1-1,5	M6	-

Code	art.	A	H	h	B thickness of the tube (min - max)	d1 6H	Weight (g)
P281020.0001	P281020.EM0601	20	25	5	1-1,5	M6	-
P281020.0002	P281020.EM0801	20	25	5	1-1,5	M8	-
P281025.0001	P281025.EM0601	25	25	5	1-1,5	M6	-
P281025.0002	P281025.EM0801	25	25	5	1-1,5	M8	-
P281030.0001	P281030.EM0801	30	25	5	1-1,5	M8	-
P281030.0002	P281030.EM1001	30	25	5	1-1,5	M10	-
P281035.0001	P281035.EM0801	35	25	5	1-1,5	M8	-
P281035.0002	P281035.EM1001	35	25	5	1-1,5	M10	-
P281040.0001	P281040.EM0801	40	25	5	1-1,5	M8	-
P281040.0002	P281040.EM1001	40	25	5	1-1,5	M10	-
P281040.0003	P281040.EM1201	40	25	5	1-1,5	M12	-
P281050.0001	P281050.EM0801	50	25	5	1-1,5	M8	-
P281050.0002	P281050.EM1001	50	25	5	1-1,5	M10	-
P281050.0003	P281050.EM1201	50	25	5	1-1,5	M12	-

P300

+75° -40° | AVP | NR | RoHS COMPLIANT

16

CYLINDRICAL ANTI-VIBRATION MOUNT WITH DOUBLE THREADED STUD

Antivibranti

Materials:
Natural rubber (NR),

Rubber hardness:
Hardness 55 Shore A (tolerance ± 5%).

Surface finish:
Smooth.

Colour:
Black (RAL 9011).

Inserts:
(1) Galvanised boron steel threaded stud (thread tolerance 6g).
(2) Galvanised weldable steel washer.

Special requests:
Upon request and for a minimum quantity of 100 pieces anti-vibration mounts can be supplied with hardness 45 or 70 Shore A.
Upon request and for a minimum quantity of 100 pieces anti-vibration mounts can be supplied in different materials.
P301 = SBR
P302 = NBR
P303 = EPDM

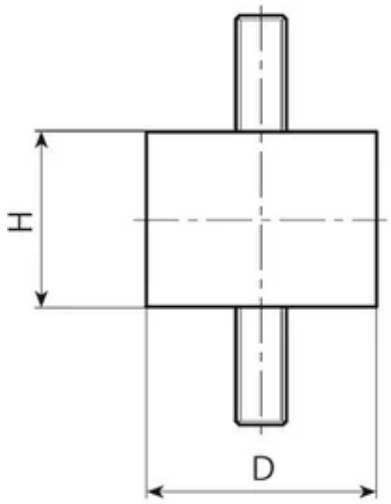

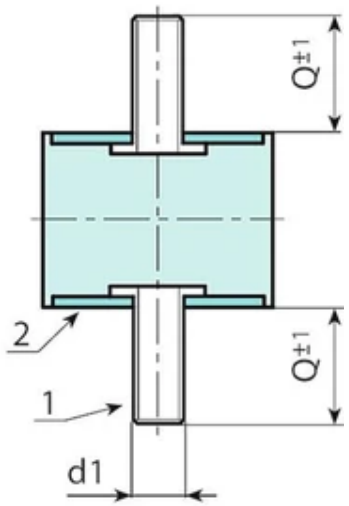

Code	Art.	D	H	d1 6g	Q	Weight (g)	Compression stiffness (N/mm)
P300008.0001	P300008.F08M03X1055	8	8	M3	10	1.5	37.9
P300015.0001	P300015.F10M04X1055	15	10	M4	10	5.5	141.7
P300015.0002	P300015.F15M04X1055	15	15	M4	10	6.5	56.5
P300015.0003	P300015.F20M04X1055	15	20	M4	10	6.5	44.6
P300020.0001	P300020.F15M06X1555	20	15	M6	16	18	122.8
P300020.0002	P300020.F20M06X1555	20	20	M6	16	19	94
P300020.0003	P300020.F25M06X1555	20	25	M6	16	20	35.9
P300025.0001	P300025.F15M06X1855	25	15	M6	18	17	211.5
P300025.0002	P300025.F20M06X1855	25	20	M6	18	27	130.5
P300025.0003	P300025.F25M06X1855	25	25	M6	18	28	89.8
P300025.0004	P300025.F30M08X1855	25	30	M8	18	33	67.2
P300030.0001	P300030.F15M08X2055	30	15	M8	20	44	456.8
P300030.0002	P300030.F20M08X2055	30	20	M8	20	48	190.8
P300030.0004	P300030.F30M08X2055	30	30	M8	20	59	100.3
P300040.0002	P300040.F20M08X2355	40	20	M8	23	54	295.2
P300040.0004	P300040.F30M08X2355	40	30	M8	23	92	196
P300040.0006	P300040.F40M10X2855	40	40	M10	28	116	125.6
P300050.0001	P300050.F20M10X2855	50	20	M10	28	125	930
P300050.0002	P300050.F30M10X2855	50	30	M10	28	151	369.2
P300050.0003	P300050.F40M10X2855	50	40	M10	28	171	242.7
P300050.0004	P300050.F45M10X2855	50	45	M10	28	182	178.6
P300050.0005	P300050.F50M10X2855	50	50	M10	28	187	160.9

Code	Art.	D	H	d1 6g	Q	Weight (g)	Compression stiffness (N/mm)
P300060.0001	P300060.F30M10X2855	60	30	M10	28	214	585.6
P300060.0002	P300060.F40M10X2855	60	40	M10	28	244	346.9
P300070.0001	P300070.F40M10X2855	70	40	M10	28	325	504.8
P300075.0001	P300075.F30M12X3755	75	30	M12	37	354	961.6
P300075.0002	P300075.F55M14X3755	75	55	M14	37	465	408.3
P300100.0001	P300100.F40M16X4255	100	40	M16	42	816	1817.2
P300100.0003	P300100.F55M16X4255	100	55	M16	42	934	878.9
P300100.0004	P300100.F75M16X4255	100	75	M16	42	1113	530.1

P305

+75° -40° | AVP | NR | RoHS COMPLIANT

16

CYLINDRICAL ANTI-VIBRATION MOUNT WITH MALE AND FEMALE THREAD

Antivibranti

Materials:

Natural rubber (NR),

Rubber hardness:

Hardness 55 Shore A (tolerance ± 5%).

Surface finish:

Smooth.

Colour:

Black (RAL 9011).

Inserts:

(1) Galvanised boron steel threaded stud (thread tolerance 6g).

(2) Galvanised weldable steel washer.

(3) Galvanised boron steel insert with female threaded hole (thread tolerance 6H).

Special requests:

Upon request and for a minimum quantity of 100 pieces anti-vibration mounts can be supplied with hardness 45 or 70 Shore A.

Upon request and for a minimum quantity of 100 pieces anti-vibration mounts can be supplied in different materials:

P306=	SBR
P307=	NBR
P308=	EPDM

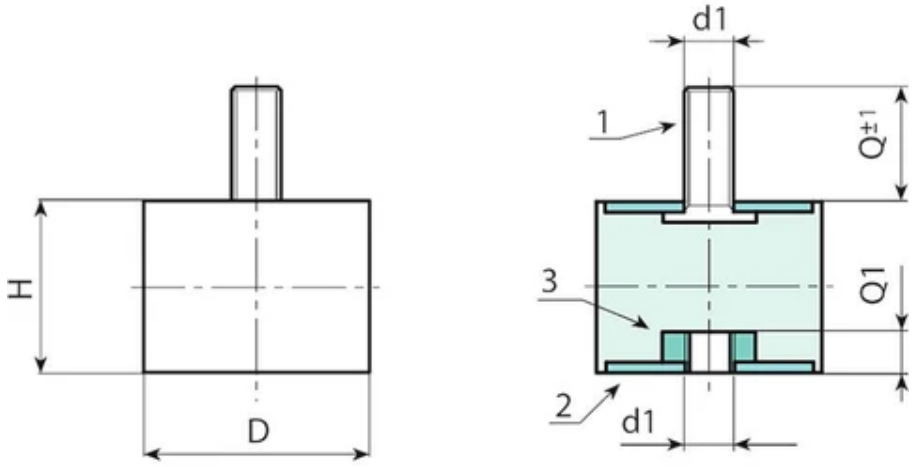

Code	Art.	D	H	d1 6g/6H	Q	Q1	Weight (g)	Compression stiffness (N/mm)
P305010.0001	P305010.F15M04X1055	10	15	M4	10	4	5	46.6
P305015.0001	P305015.F15M04X1055	15	15	M4	10	4	7	57.1
P305015.0002	P305015.F20M04X1055	15	20	M4	10	4	7.5	45.1
P305020.0001	P305020.F20M06X1555	20	20	M6	15	6	18	79.2
P305020.0003	P305020.F25M06X1555	20	25	M6	15	6	21	36.3
P305025.0001	P305025.F15M06X1855	25	15	M6	18	6	27	213.8
P305025.0002	P305025.F20M06X1855	25	20	M6	18	6	26	131.9
P305025.0003	P305025.F30M06X1855	25	30	M6	18	8	37	67.9
P305030.0001	P305030.F15M08X2055	30	15	M8	20	8	41	461.7
P305030.0002	P305030.F20M08X2055	30	20	M8	20	8	47	192.9
P305030.0003	P305030.F30M08X2055	30	30	M8	20	8	52	101.4
P305040.0001	P305040.F20M08X2355	40	20	M8	23	8	73	298.3
P305040.0002	P305040.F30M08X2355	40	30	M8	23	8	86	180.5
P305040.0004	P305040.F40M10X2855	40	40	M10	28	10	113	126.9
P305050.0001	P305050.F30M10X2855	50	30	M10	28	10	142	373.2
P305050.0003	P305050.F40M10X2855	50	40	M10	28	10	156	245.3
P305050.0004	P305050.F45M10X2855	50	45	M10	28	10	172	180.5
P305050.0005	P305050.F50M10X2855	50	50	M10	28	10	176	164.4
P305060.0001	P305060.F30M10X2855	60	30	M10	28	10	195	591.9
P305060.0002	P305060.F40M10X2855	60	40	M10	28	10	233	350.6
P305070.0001	P305070.F40M10X2855	70	40	M10	28	10	314	510.2
P305075.0001	P305075.F25M12X3755	75	25	M12	37	12	296	1177.1

Code	Art.	D	H	d1 6g/6H	Q	Q1	Weight (g)	Compression stiffness (N/mm)
P305075.0002	P305075.F40M12X3755	75	40	M12	37	12	383	598.5
P305075.0004	P305075.F55M14X3755	75	55	M14	37	14	482	412.7
P305100.0001	P305100.F40M16X4255	100	40	M16	42	16	768	1478.5
P305100.0002	P305100.F55M16X4255	100	55	M16	42	16	865	888.3
P305100.0004	P305100.F75M16X4255	100	75	M16	42	16	1058	541.5

P310

+75° -40° | AVP | NR | RoHS COMPLIANT

16

CYLINDRICAL ANTI-VIBRATION MOUNT WITH DOUBLE THREADED HOLE

Antivibranti

Materials:

Natural rubber (NR),

Rubber hardness:

Hardness 55 Shore A (tolerance ± 5%).

Surface finish:

Smooth.

Colour:

Black (RAL 9011).

Inserts:

(1) Galvanised boron steel insert with female threaded hole (thread tolerance 6H).

(2) Galvanised weldable steel washer.

Special requests:

Upon request and for a minimum quantity of 100 pieces anti-vibration mounts can be supplied with hardness 45 or 70 Shore A.

Upon request and for a minimum quantity of 100 pieces anti-vibration mounts can be supplied in different materials:

P311=	SBR
P312=	NBR
P313=	EPDM

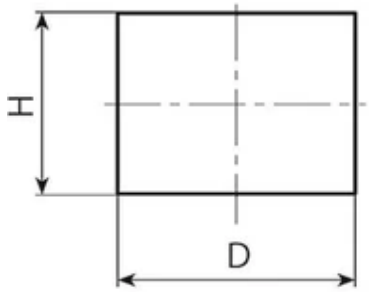

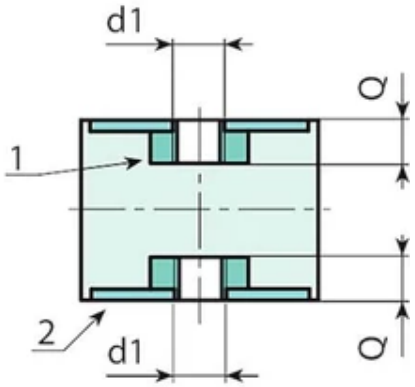

Code	Art.	D	H	d1 6H	Q	Weight (g)	Compression stiffness (N/mm)
P310015.0001	P310015.F15M0455	15	15	M4	3,5	4	66,1
P310015.0002	P310015.F20M0455	15	20	M4	3,5	9	52,2
P310020.0001	P310020.F20M0655	20	20	M6	5,5	17	91,7
P310020.0002	P310020.F25M0655	20	25	M6	5,5	19	42
P310025.0001	P310025.F20M0655	25	20	M6	5,5	26	152,7
P310025.0002	P310025.F25M0655	25	25	M6	5,5	28	105,1
P310025.0003	P310025.F30M0655	25	30	M6	5,5	31	78,5
P310030.0001	P310030.F20M0855	30	20	M8	8	42	223,3
P310030.0002	P310030.F30M0855	30	30	M8	8	52	117,4
P310030.0003	P310030.F40M0855	30	40	M8	8	59	99
P310040.0001	P310040.F30M0855	40	30	M8	8	83	190,1
P310040.0002	P310040.F40M1055	40	40	M10	9,5	102	133,7
P310050.0001	P310050.F30M1055	50	30	M10	9,5	132	393
P310050.0003	P310050.F40M1055	50	40	M10	9,5	146	258,4
P310050.0004	P310050.F50M1055	50	50	M10	9,5	172	171,3
P310060.0001	P310060.F30M1055	60	30	M10	10	255	685,3
P310060.0002	P310060.F40M1055	60	40	M10	10	222	405,9
P310070.0001	P310070.F40M1055	70	40	M10	10	310	590,7
P310075.0001	P310075.F40M1255	75	40	M12	12	365	671
P310100.0001	P310100.F40M1655	100	40	M16	16	678	1934,5
P310100.0002	P310100.F55M1655	100	55	M16	16	855	9035,6
P310100.0003	P310100.F75M1655	100	75	M16	16	997	564,3

P315

+75° -40° | AVP | NR | RoHS COMPLIANT

16

CYLINDRICAL ANTI-VIBRATION MOUNT WITH SINGLE THREADED STUD

Antivibranti

Materials:
Natural rubber (NR),

Rubber hardness:
Hardness 55 Shore A (tolerance ± 5%).

Surface finish:
Smooth.

Colour:
Black (RAL 9011).

Inserts:
(1) Galvanised boron steel threaded stud (thread tolerance 6g).
(2) Galvanised weldable steel washer.

Special requests:
Upon request and for a minimum quantity of 100 pieces anti-vibration mounts can be supplied with hardness 45 or 70 Shore A.

Upon request and for a minimum quantity of 100 pieces anti-vibration mounts can be supplied in different materials:

P316=	SBR
P317=	NBR
P318=	EPDM

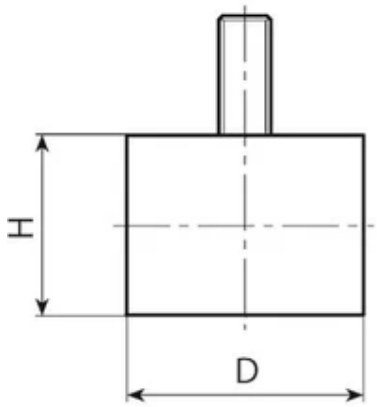

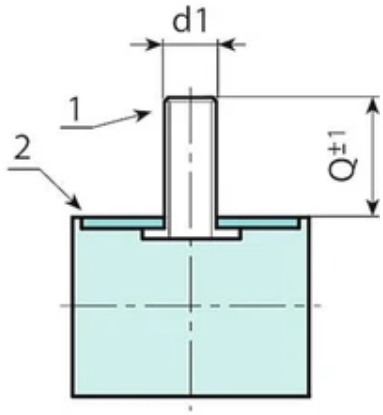

Code	Art.	D	H	d1 6g	Q	Weight (g)	Compression stiffness (N/mm)
P315010.0001	P315010.F10M04X1055	10	10	M4	10	2	38
P315015.0001	P315015.F10M04X1055	15	10	M4	10	4	116.6
P315015.0002	P315015.F15M04X1055	15	15	M4	10	5	48.3
P315015.0003	P315015.F20M04X1055	15	20	M4	10	6	38.5
P315015.0004	P315015.F30M04X1055	15	30	M4	10	7	25.7
P315020.0001	P315020.F15M06X1555	20	15	M6	16	11	95.9
P315020.0002	P315020.F20M06X1555	20	20	M6	16	14	57
P315020.0003	P315020.F30M06X1555	20	30	M6	16	20	39.5
P315025.0001	P315025.F15M06X1855	25	15	M6	18	17	173
P315025.0003	P315025.F20M06X1855	25	20	M6	18	20	109
P315025.0004	P315025.F30M06X1855	25	30	M6	18	24	63.9
P315030.0001	P315030.F15M08X2055	30	15	M8	20	30	293.3
P315030.0002	P315030.F20M08X2055	30	20	M8	20	34	160
P315030.0003	P315030.F30M08X2055	30	30	M8	20	41	87
P315040.0001	P315040.F20M08X2355	40	20	M8	23	53	354.4
P315040.0002	P315040.F30M08X2355	40	30	M8	23	68	183.3
P315040.0003	P315040.F40M10X2855	40	40	M10	28	90	120.5
P315050.0001	P315050.F20M10X2855	50	20	M10	28	87	623.4
P315050.0003	P315050.F30M10X2855	50	30	M10	28	106	310.2
P315050.0004	P315050.F40M10X2855	50	40	M10	28	108	204
P315060.0001	P315060.F40M10X2855	60	40	M10	28	186	319.6
P315070.0001	P315070.F40M10X2855	70	40	M10	28	254	503.5

Code	Art.	D	H	d1 6g	Q	Weight (g)	Compression stiffness (N/mm)
P315070.0002	P315070.F50M10X2855	70	50	M10	28	294	322.4
P315075.0001	P315075.F25M12X3755	75	25	M12	37	224	1274.6
P315075.0002	P315075.F40M12X3755	75	40	M12	37	296	528.3
P315075.0003	P315075.F50M12X3755	75	50	M12	37	340	378.8
P315100.0001	P315100.F40M16X4255	100	40	M16	42	584	1167.5
P315100.0002	P315100.F50M16X4255	100	50	M16	42	666	1489

P320

+75° -40° | AVP | NR | RoHS COMPLIANT

16

CYLINDRICAL ANTI-VIBRATION MOUNT WITH SINGLE THREADED HOLE

Antivibranti

Materials:

Natural rubber (NR),

Rubber hardness:

Hardness 55 Shore A (tolerance ± 5%).

Surface finish:

Smooth.

Colour:

Black (RAL 9011).

Inserts:

(1) Galvanised boron steel insert with female threaded hole (thread tolerance 6H).

(2) Galvanised weldable steel washer.

Special requests:

Upon request and for a minimum quantity of 100 pieces anti-vibration mounts can be supplied with hardness 45 or 70 Shore A.

Upon request and for a minimum quantity of 100 pieces anti-vibration mounts can be supplied in different materials:

P321=	SBR
P322=	NBR
P323=	EPDM

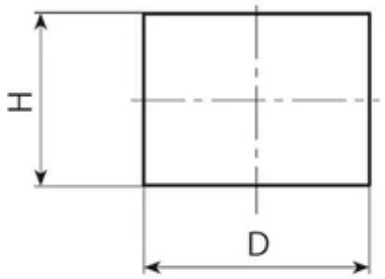

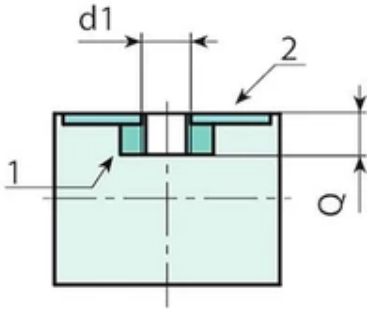

Code	Art.	D	H	d1 6H	Q	Weight (g)	Compression stiffness (N/mm)
P320010.0001	P320010.F10M0455	10	10	M4	4	1.5	45.6
P320015.0001	P320015.F15M0455	15	15	M4	4	5	58.6
P320015.0003	P320015.F20M0455	15	20	M4	4	7	46.7
P320020.0001	P320020.F15M0655	20	15	M6	6	11	116.3
P320020.0002	P320020.F20M0655	20	20	M6	6	12.5	77.5
P320020.0003	P320020.F25M0655	20	25	M6	6	14	58.1
P320025.0001	P320025.F15M0655	25	15	M6	6	15	209.8
P320025.0002	P320025.F20M0655	25	20	M6	6	19	132.2
P320025.0003	P320025.F30M0655	25	30	M6	6	23	77.5
P320030.0001	P320030.F15M0855	30	15	M8	8	25.5	355.7
P320030.0002	P320030.F20M0855	30	20	M8	8	29	210.9
P320030.0003	P320030.F30M0855	30	30	M8	8	38	117.4
P320040.0001	P320040.F20M0855	40	20	M8	8	48	429.8
P320040.0002	P320040.F30M0855	40	30	M8	8	66	222.3
P320040.0004	P320040.F40M1055	40	40	M10	10	81	151.6
P320050.0001	P320050.F20M1055	50	20	M10	10	75	783.2
P320050.0002	P320050.F30M1055	50	30	M10	10	95	376.2
P320050.0003	P320050.F40M1055	50	40	M10	10	118	247.4
P320060.0001	P320060.F30M1055	60	30	M10	10	141	477.6
P320060.0002	P320060.F50M1055	60	50	M10	10	217	247.4
P320070.0001	P320070.F40M1055	70	40	M10	10	238	604.2
P320070.0002	P320070.F50M1055	70	50	M10	10	246	391

Code	Art.	D	H	d1 6H	Q	Weight (g)	Compression stiffness (N/mm)
P320075.0001	P320075.F25M1255	75	25	M12	12	205	1546.8
P320075.0002	P320075.F30M1255	75	30	M12	12	232	125.4
P320075.0003	P320075.F40M1255	75	40	M12	12	284	640.7
P320075.0004	P320075.F50M1255	75	50	M12	12	334	459.4
P320100.0001	P320100.F40M1655	100	40	M16	16	514	1415.9
P320100.0002	P320100.F50M1655	100	50	M16	16	620	1805.8

P325

+75° -40° | AVP | NR | RoHS COMPLIANT

16 CONICAL ANTI-VIBRATION MOUNT WITH THREADED STUD

Antivibranti

Materials:
Natural rubber (NR),

Rubber hardness:
Hardness 55 Shore A (tolerance ± 5%).

Surface finish:
Smooth.

Colour:
Black (RAL 9011).

Inserts:
(1) Galvanised boron steel threaded stud (thread tolerance 6g).
(2) Galvanised weldable steel washer.

Special requests:
Upon request and for a minimum quantity of 100 pieces anti-vibration mounts can be supplied with hardness 45 or 70 Shore A.
Upon request and for a minimum quantity of 100 pieces anti-vibration mounts can be supplied in different materials:

P326=	SBR
P327=	NBR
P328=	EPDM

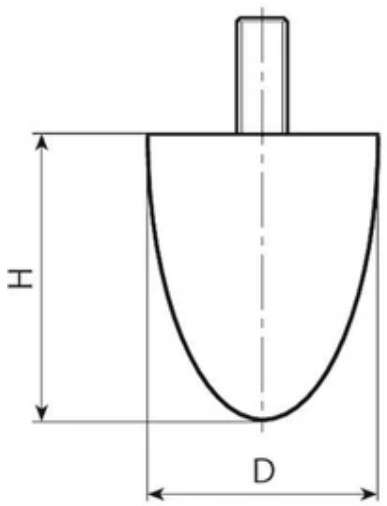

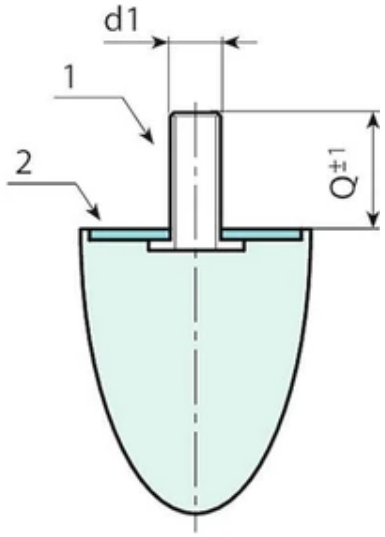

Code	Art.	D	H	d1 6g	Q	Weight (g)
P325020.0001	P325020.F24M06X1855	20	24	M6	18	10
P325025.0001	P325025.F25M06X1855	25	25	M8	18	12
P325030.0001	P325030.F36M08X2055	30	36	M8	20	35
P325035.0001	P325035.F40M08X2355	35	40	M8	23	47
P325050.0001	P325050.F60M10X2855	50	60	M10	28	117
P325050.0003	P325050.F67M10X2855	50	67	M10	28	125

P330

+75° -40° | AVP | NR | RoHS COMPLIANT

16

SHAPED ANTI-VIBRATION MOUNT WITH DOUBLE THREADED STUD

Antivibranti

Materials:
Natural rubber (NR),

Rubber hardness:
Hardness 55 Shore A (tolerance ± 5%).

Surface finish:
Smooth.

Colour:
Black (RAL 9011).

Inserts:
(1) Galvanised boron steel threaded stud (thread tolerance 6g).
(2) Galvanised weldable steel washer.

Special requests:
Upon request and for a minimum quantity of 100 pieces anti-vibration mounts can be supplied with hardness 45 or 70 Shore A.

Upon request and for a minimum quantity of 100 pieces anti-vibration mounts can be supplied in different materials:

P331=	SBR
P332=	NBR
P333=	EPDM

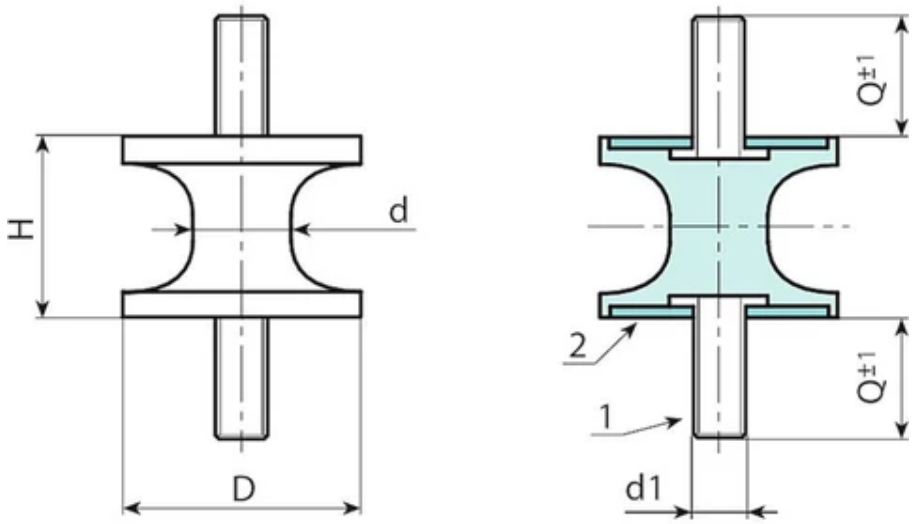

Code	Art.	D	H	d	d1 6g	Q
P330012.0001	P330012.F1507M0455	12	15	7	M4	10
P330020.0001	P330020.F1510M0655	20	15	10	M6	16
P330025.0001	P330025.F2010M0655	25	20	10	M6	18
P330025.0002	P330025.F2017M0655	25	20	17	M6	18
P330030.0001	P330030.F2020M0855	30	20	20	M8	23
P330040.0001	P330040.F3019M0855	40	30	19	M8	23
P330040.0002	P330040.F3027M0855	40	30	27	M8	23
P330040.0004	P330040.F4835M0855	40	48	35	M8	23
P330050.0001	P330050.F3028M1055	50	30	28	M10	28
P330075.0001	P330075.F4055M1255	75	40	55	M12	37
P330080.0001	P330080.F6060M1255	80	60	60	M12	37

P335

+75° -40° | AVP | NR | RoHS COMPLIANT

16

SHAPED ANTI-VIBRATION MOUNT WITH MALE AND FEMALE THREAD

Antivibranti

Materials:

Natural rubber (NR),

Rubber hardness:

Hardness 55 Shore A (tolerance ± 5%).

Surface finish:

Smooth.

Colour:

Black (RAL 9011).

Inserts:

(1) Galvanised boron steel threaded stud (thread tolerance 6g).

(2) Galvanised weldable steel washer.

(3) Galvanised boron steel insert with female threaded hole (thread tolerance 6H).

Special requests:

Upon request and for a minimum quantity of 100 pieces anti-vibration mounts can be supplied with hardness 45 or 70 Shore A.

Upon request and for a minimum quantity of 100 pieces anti-vibration mounts can be supplied in different materials:

P336=	SBR
P337=	NBR
P338=	EPDM

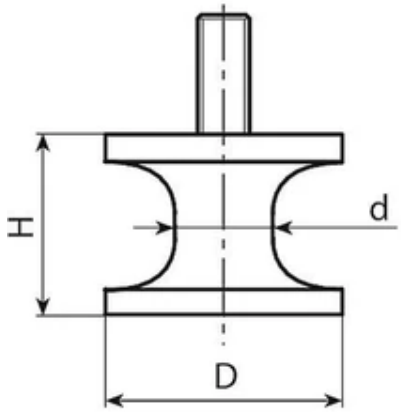

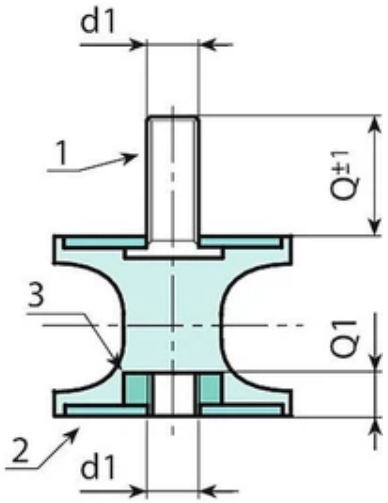

Code	Art.	D	H	d	d1 6g/6H	Q	Q1
P335020.0001	P335020.F1510M0655	20	15	7	M6	16	6
P335025.0001	P335025.F2010M0655	25	20	10	M6	18	6
P335025.0002	P335025.F2017M0655	25	20	10	M6	18	6
P335030.0001	P335030.F2020M0855	30	20	17	M8	23	8
P335040.0001	P335040.F3019M0855	40	30	19	M8	23	8
P335040.0002	P335040.F3027M0855	40	30	27	M8	23	8
P335040.0004	P335040.F4835M0855	40	48	35	M8	23	8
P335050.0001	P335050.F3028M1055	50	30	28	M10	28	10
P335080.0001	P335080.F6060M1255	80	60	60	M12	37	12

P481

NEW | +135° -30° | PA6 +G.F. | RoHS COMPLIANT

16 PLUG FOR SQUARE TUBE WITH INSERT WITH THREADED THROUGH HOLE (HEAVY DUTY SERIES)

Tappi con foro filettato

Materials:

Reinforced polyamide.

Resistant to oils and greases.

Surface finish:

Satin.

Colour:

Black (RAL 9011).

Inserts:

Nickel-plated brass insert with threaded through hole (thread tolerance 6H).

Fixing method:

Push-fit.

Special requests:

Upon request and for special quantities inserts can be supplied in different materials.

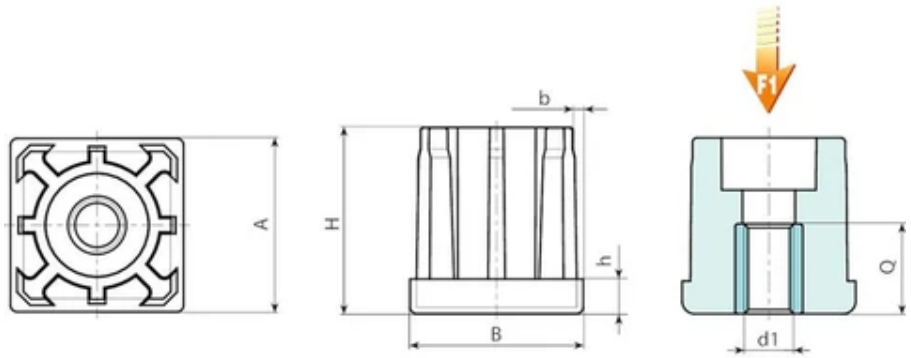

Code	art.	A	B	H	h	b thickness of the tube	d1 6H	Q	Weight (g)	F1 (kN)
P481030.0009	ART_P481030.T1.5M0801	30	30	32.5	6	1,5	M8	26	63	17
P481030.0001	ART_P481030.T1.5M1001	30	30	32.5	6	1,5	M10	26	59	17
P481030.0002	ART_P481030.T1.5M1201	30	30	32.5	6	1,5	M12	26	55	17
P481030.0003	ART_P481030.T1.5M1401	30	30	32.5	6	1,5	M14	26	50	17
P481030.0004	ART_P481030.T1.5M1601	30	30	32.5	6	1,5	M16	26	46	17

P530

+200° -40° | AVP | Aisi 303 | RoHS COMPLIANT

16 FULL STEEL MOUNTING FOOT WITH ARTICULATED STEM TYPE A - BALL 12.5

Piedi metallo con stelo snodato

Materials:

P530:

Turned free-cutting steel mounting foot base.

P530CIN:

Turned stainless steel mounting foot base (Aisi 303).

Surface finish:

Smooth.

Colour:

P530:

Standard blue galvanising.

P530CIN:

Natural.

Inserts:

P530:

Galvanised steel threaded and articulated stem (ball 12.5) with hexagonal base (thread tolerance 6g).

P530CIN:

Stainless steel threaded and articulated stem (ball 12.5) with hexagonal base (Aisi 303) (thread tolerance 6g).

Stem fixing method:

The stem cannot be disassembled. The ball cannot be removed as the edge of its seat has been pressed in.

Special requests:

Upon request and for special quantities inserts can be supplied with customised lengths.

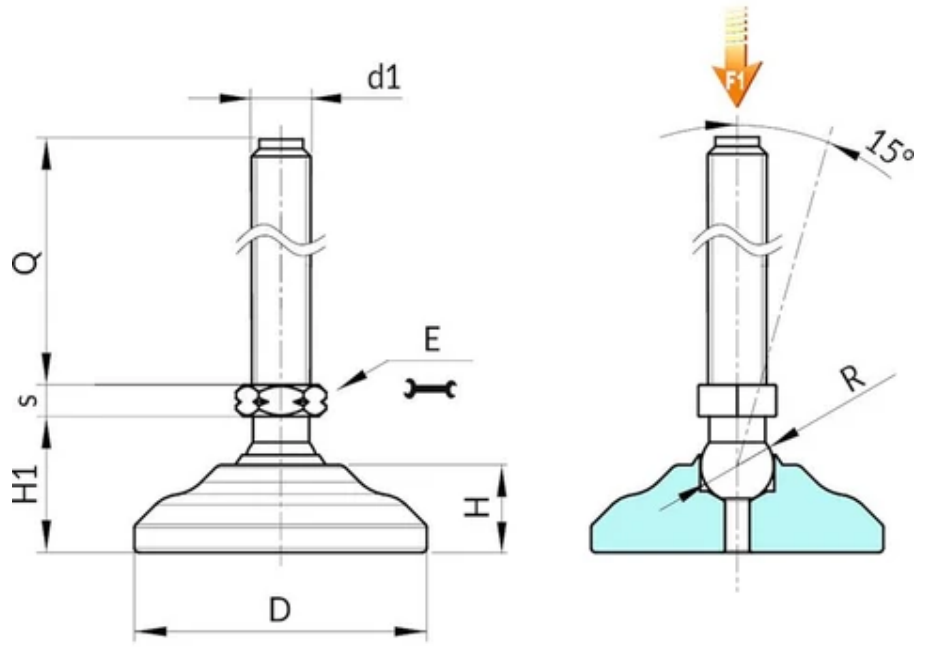

Version P530: Galvanised steel mounting foot with stem type A (with hexagonal base) and ball 12.5

Code	Art.	D	H	H1	E	s	R	d1 6g	Q	Weight (g)	F1 (kN)
P53040.0009	P53040.VZM08X45	40	11,5	20	13	5	15	M8	45	132	50
P53040.0010	P53040.VZM08X70	40	11,5	20	13	5	15	M8	70	139	50
P53040.0011	P53040.VZM10X045	40	11,5	20	13	5	12.5	M10	45	140	23
P53040.0012	P53040.VZM10X070	40	11,5	20	13	5	12.5	M10	70	152	23
P53040.0013	P53040.VZM10X100	40	11,5	20	13	5	12.5	M10	100	179	23
P53040.0014	P53040.VZM12X045	40	11,5	20	13	5	12.5	M12	45	149	23
P53040.0015	P53040.VZM12X070	40	11,5	20	13	5	12.5	M12	70	168	23
P53040.0016	P53040.VZM12X100	40	11,5	20	13	5	12.5	M12	100	188	23
P53050.0009	P53050.VZM08X045	60	18	28	13	5	12.5	M8	45	295	13
P53050.0010	P53050.VZM08X070	60	18	28	13	5	12.5	M8	70	302	13
P53050.0011	P53050.VZM10X045	50	13.5	23	13	5	12.5	M10	45	203	23
P53050.0012	P53050.VZM10X070	50	13.5	23	13	5	12.5	M10	70	215	23
P53050.0013	P53050.VZM10X100	50	13.5	23	13	5	12.5	M10	100	240	23
P53050.0014	P53050.VZM12X045	50	13.5	23	13	5	12.5	M12	45	212	23
P53050.0015	P53050.VZM12X070	50	13.5	23	13	5	12.5	M12	70	231	23
P53050.0016	P53050.VZM12X100	50	13.5	23	13	5	12.5	M12	100	251	23
P53060.0009	P53060.VZM08X045	60	18	28	13	5	12.5	M8	45	295	13
P53060.0010	P53060.VZM08X070	60	18	28	13	5	12.5	M8	70	302	13
P53060.0011	P53060.VZM10X045	60	18	28	13	5	12.5	M10	45	303	23
P53060.0012	P53060.VZM10X070	60	18	28	13	5	12.5	M10	70	315	23
P53060.0013	P53060.VZM10X100	60	18	28	13	5	12.5	M10	100	340	23

Code	Art.	D	H	H1	E	s	R	d1 6g	Q	Weight (g)	F1 (kN)
P53060.0014	P53060.VZM12X045	60	18	28	13	5	12.5	M12	45	312	23
P53060.0015	P53060.VZM12X070	60	18	28	13	5	12.5	M12	70	331	23
P53060.0016	P53060.VZM12X100	60	18	28	13	5	12.5	M12	100	351	23

Attention: The expressed load limit F1 is lower than the break load by 30% and is intended as static.
Customised stud length available for a minimum of 100 pieces.

Version P530CIN: Stainless steel mounting foot with stem type A (with hexagonal base) and ball 12.5

Code	Art.	D	H	H1	E	s	R	d1 6g	Q	Weight (g)	F1 (kN)
P53040.0001	P53040.INM08X045CIN	40	11,5	20	13	5	12.5	M8	45	132	13
P53040.0002	P53040.INM08X070CIN	40	11,5	20	13	5	12.5	M8	70	139	13
P53040.0003	P53040.INM10X045CIN	40	11,5	20	13	5	12.5	M10	45	140	23
P53040.0005	P53040.INM10X70CIN	40	11,5	20	13	5	12.5	M10	70	152	23
P53040.0004	P53040.INM10X100CIN	40	11,5	20	13	5	12.5	M10	100	179	23
P53040.0006	P53040.INM12X045CIN	40	11,5	20	13	5	12.5	M12	45	149	23
P53040.0007	P53040.INM12X070CIN	40	11,5	20	13	5	12.5	M12	70	168	23
P53040.0008	P53040.INM12X100CIN	40	11,5	20	13	5	12.5	M12	100	188	23
P53050.0001	P53050.INM08X045CIN	50	13.5	23	13	5	12.5	M8	45	195	13
P53050.0002	P53050.INM08X070CIN	50	13.5	23	13	5	12.5	M8	70	202	13
P53050.0003	P53050.INM10X045CIN	50	13.5	23	13	5	12.5	M10	45	203	23
P53050.0004	P53050.INM10X070CIN	50	13.5	23	13	5	12.5	M10	70	215	23
P53050.0005	P53050.INM10X100CIN	50	13.5	23	13	5	12.5	M10	100	240	23
P53050.0006	P53050.INM12X045CIN	50	13.5	23	13	5	12.5	M12	45	212	23
P53050.0007	P53050.INM12X070CIN	50	13.5	23	13	5	12.5	M12	70	231	23
P53050.0008	P53050.INM12X100CIN	50	13.5	23	13	5	12.5	M12	100	251	23
P53060.0001	P53060.INM08X045CIN	60	18	28	13	5	12.5	M8	45	295	13
P53060.0002	P53060.INM08X070CIN	60	18	28	13	5	12.5	M8	70	302	13
P53060.0003	P53060.INM10X045CIN	60	18	28	13	5	12.5	M10	45	303	23
P53060.0004	P53060.INM10X070CIN	60	18	28	13	5	12.5	M10	70	315	23
P53060.0005	P53060.INM10X100CIN	60	18	28	13	5	12.5	M10	100	340	23
P53060.0006	P53060.INM12X045CIN	60	18	28	13	5	12.5	M12	45	312	23
P53060.0007	P53060.INM12X070CIN	60	18	28	13	5	12.5	M12	70	331	23
P53060.0008	P53060.INM12X100CIN	60	18	28	13	5	12.5	M12	100	351	23

Attention: The expressed load limit F1 is lower than the break load by 30% and is intended as static.
Customised stud length available for a minimum of 100 pieces.

P531

+200° -40° | AVP | Aisi 303 | RoHS COMPLIANT

16 FULL STEEL MOUNTING FOOT WITH ARTICULATED STEM TYPE A - BALL 15

Piedi metallo con stelo snodato

Materials:

P531:

Turned free-cutting steel mounting foot base.

P531CIN:

Turned stainless steel mounting foot base (Aisi 303).

Surface finish:

Smooth.

Colour:

P531:

Standard blue galvanising.

P531CIN:

Natural.

Inserts:

P531:

Galvanised steel threaded and articulated stem (ball 15) with hexagonal base (thread tolerance 6g).

P531CIN:

Stainless steel threaded and articulated stem (ball 15) with hexagonal base (Aisi 303) (thread tolerance 6g).

Stem fixing method:

The stem cannot be disassembled. The ball cannot be removed as the edge of its seat has been pressed in.

Special requests:

Upon request and for special quantities inserts can be supplied with customised lengths.

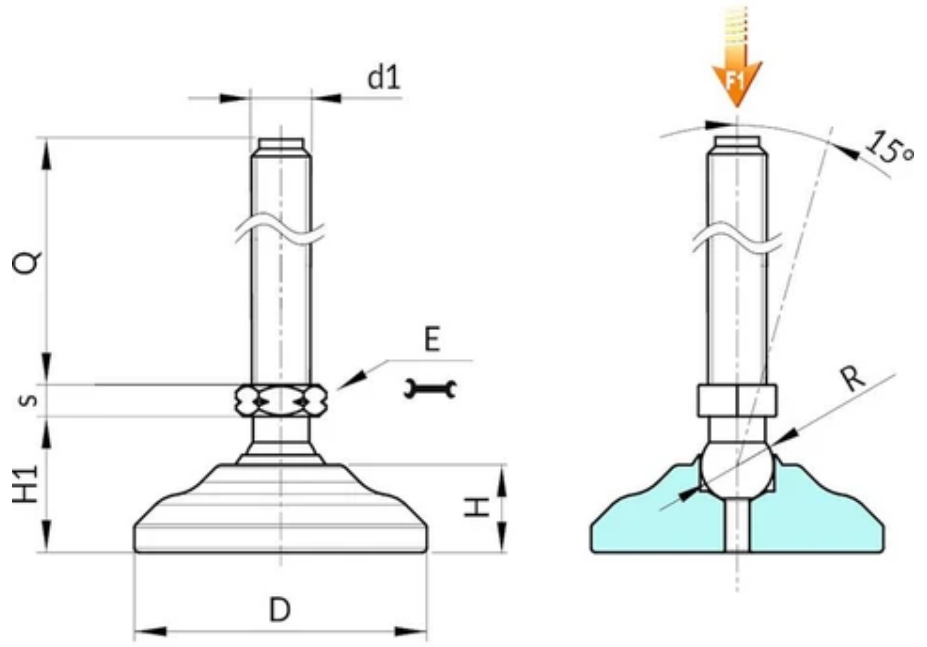

Version P531: Galvanised steel mounting foot with stem type A (with hexagonal base) and ball 15

Code	Art.	D	H	H1	E	s	R	d1 6g	Q	Weight (g)	F1 (kN)
P53140.0019	P53140.VZM12X50	40	11.5	20	16	6.5	15	M12	50	166	33
P53140.0020	P53140.VZM12X70	40	11.5	20	16	6.5	15	M12	70	179	33
P53140.0021	P53140.VZM12X90	40	11.5	20	16	6.5	15	M12	90	194	33
P53140.0022	P53140.VZM12X110	40	11.5	20	16	6.5	15	M12	110	210	33
P53140.0023	P53140.VZM14X50	40	11.5	20	16	6.5	15	M14	50	178	33
P53140.0024	P53140.VZM14X70	40	11.5	20	16	6.5	15	M14	70	198	33
P53140.0025	P53140.VZM14X90	40	11.5	20	16	6.5	15	M14	90	219	33
P53140.0026	P53140.VZM14X110	40	11.5	20	16	6.5	15	M14	110	236	33
P53140.0027	P53140.VZM14X130	40	11.5	20	16	6.5	15	M14	130	253	33
P53140.0028	P53140.VZM14X150	40	11.5	20	16	6.5	15	M14	150	270	33
P53140.0029	P53140.VZM16X50	40	11.5	20	16	6.5	15	M16	50	194	50
P53140.0030	P53140.VZM16X70	40	11.5	20	16	6.5	15	M16	70	220	50
P53140.0031	P53140.VZM16X90	40	11.5	20	16	6.5	15	M16	90	246	50
P53140.0032	P53140.VZM16X110	40	11.5	20	16	6.5	15	M16	110	271	50
P53140.0033	P53140.VZM16X130	40	11.5	20	16	6.5	15	M16	130	297	50
P53140.0034	P53140.VZM16X150	40	11.5	20	16	6.5	15	M16	150	322	50
P53140.0035	P53140.VZM16X170	40	11.5	20	16	6.5	15	M16	170	350	50
P53140.0036	P53140.VZM16X190	40	11.5	20	16	6.5	15	M16	190	373	50
P53150.0019	P53150.VZM12X50	50	13.5	23	16	6.5	15	M12	50	229	33
P53150.0022	P53150.VZM12X70	50	13.5	23	16	6.5	15	M12	70	242	33
P53150.0020	P53150.VZM12X90	50	13.5	23	16	6.5	15	M12	90	257	33

Code	Art.	D	H	H1	E	s	R	d1 6g	Q	Weight (g)	F1 (kN)
P53150.0021	P53150.VZM12X110	50	13.5	23	16	6.5	15	M12	110	273	33
P53150.0023	P53150.VZM14X50	50	13.5	23	16	6.5	15	M14	50	241	33
P53150.0024	P53150.VZM14X70	50	13.5	23	16	6.5	15	M14	70	261	33
P53150.0025	P53150.VZM14X90	50	13.5	23	16	6.5	15	M14	90	282	33
P53150.0026	P53150.VZM14X110	50	13.5	23	16	6.5	15	M14	110	299	33
P53150.0027	P53150.VZM14X130	50	13.5	23	16	6.5	15	M14	130	316	33
P53150.0028	P53150.VZM14X150	50	13.5	23	16	6.5	15	M14	150	333	33
P53160.0019	P53160.VZM12X50	60	18	28	16	6.5	15	M12	50	329	33
P53160.0020	P53160.VZM12X70	60	18	28	16	6.5	15	M12	70	342	33
P53160.0038	P53160.VZM12X90	60	18	28	16	6.5	15	M12	90	357	33
P53160.0021	P53160.VZM12X110	60	18	28	16	6.5	15	M12	110	373	33
P53160.0022	P53160.VZM14X50	60	18	28	16	6.5	15	M14	50	341	33
P53160.0023	P53160.VZM14X70	60	18	28	16	6.5	15	M14	70	361	33
P53160.0024	P53160.VZM14X90	60	18	28	16	6.5	15	M14	90	382	33
P53160.0025	P53160.VZM14X110	60	18	28	16	6.5	15	M14	110	399	33
P53160.0026	P53160.VZM14X130	60	18	28	16	6.5	15	M14	130	416	33
P53160.0027	P53160.VZM14X150	60	18	28	16	6.5	15	M14	150	433	33

Attention: The expressed load limit F1 is lower than the break load by 30% and is intended as static.
Customised stud length available for a minimum of 100 pieces.

Version P531CIN: Stainless steel mounting foot with stem type A (with hexagonal base) and ball 15

Code	Art.	D	H	H1	E	s	R	d1 6g	Q	Weight (g)	F1 (kN)
P53140.0001	P53140.INM12X50CIN	40	11.5	20	16	6.5	15	M12	50	166	33
P53140.0002	P53140.INM12X70CIN	40	11.5	20	16	6.5	15	M12	70	179	33
P53140.0003	P53140.INM12X90CIN	40	11.5	20	16	6.5	15	M12	90	194	33
P53140.0004	P53140.INM12X110CIN	40	11.5	20	16	6.5	15	M12	110	210	33
P53140.0005	P53140.INM14X50CIN	40	11.5	20	16	6.5	15	M14	50	178	33
P53140.0006	P53140.INM14X70CIN	40	11.5	20	16	6.5	15	M14	70	198	33
P53140.0007	P53140.INM14X90CIN	40	11.5	20	16	6.5	15	M14	90	219	33
P53140.0008	P53140.INM14X110CIN	40	11.5	20	16	6.5	15	M14	110	236	33
P53140.0009	P53140.INM14X130CIN	40	11.5	20	16	6.5	15	M14	130	253	33
P53140.0010	P53140.INM14X150CIN	40	11.5	20	16	6.5	15	M14	150	270	33
P53140.0011	P53140.INM16X50CIN	40	11.5	20	16	6.5	15	M16	50	194	50
P53140.0012	P53140.INM16X70CIN	40	11.5	20	16	6.5	15	M16	70	220	50
P53140.0013	P53140.INM16X90CIN	40	11.5	20	16	6.5	15	M16	90	246	50
P53140.0014	P53140.INM16X110CIN	40	11.5	20	16	6.5	15	M16	110	271	50
P53140.0015	P53140.INM16X130CIN	40	11.5	20	16	6.5	15	M16	130	297	50
P53140.0016	P53140.INM16X150CIN	40	11.5	20	16	6.5	15	M16	150	322	50
P53140.0017	P53140.INM16X170CIN	40	11.5	20	16	6.5	15	M16	170	350	50
P53140.0018	P53140.INM16X190CIN	40	11.5	20	16	6.5	15	M16	190	373	50

Code	Art.	D	H	H1	E	s	R	d1 6g	Q	Weight (g)	F1 (kN)
P53150.0001	P53150.INM12X50CIN	50	13.5	23	16	6.5	15	M12	50	229	33
P53150.0002	P53150.INM12X70CIN	50	13.5	23	16	6.5	15	M12	70	242	33
P53150.0003	P53150.INM12X90CIN	50	13.5	23	16	6.5	15	M12	90	257	33
P53150.0004	P53150.INM12X110CIN	50	13.5	23	16	6.5	15	M12	110	273	33
P53150.0005	P53150.INM14X50CIN	50	13.5	23	16	6.5	15	M14	50	241	33
P53150.0006	P53150.INM14X70CIN	50	13.5	23	16	6.5	15	M14	70	261	33
P53150.0007	P53150.INM14X90CIN	50	13.5	23	16	6.5	15	M14	90	282	33
P53150.0008	P53150.INM14X110CIN	50	13.5	23	16	6.5	15	M14	110	299	33
P53150.0009	P53150.INM14X130CIN	50	13.5	23	16	6.5	15	M14	130	316	33
P53150.0010	P53150.INM14X150CIN	50	13.5	23	16	6.5	15	M14	150	333	33
P53150.0011	P53150.INM16X50CIN	50	13.5	23	16	6.5	15	M16	50	257	50
P53150.0012	P53150.INM16X70CIN	50	13.5	23	16	6.5	15	M16	70	283	50
P53150.0013	P53150.INM16X90CIN	50	13.5	23	16	6.5	15	M16	90	309	50
P53150.0014	P53150.INM16X110CIN	50	13.5	23	16	6.5	15	M16	110	334	50
P53150.0015	P53150.INM16X130CIN	50	13.5	23	16	6.5	15	M16	130	360	50
P53150.0016	P53150.INM16X150CIN	50	13.5	23	16	6.5	15	M16	150	385	50
P53150.0017	P53150.INM16X170CIN	50	13.5	23	16	6.5	15	M16	170	413	50
P53150.0018	P53150.INM16X190CIN	50	13.5	23	16	6.5	15	M16	190	436	50
P53160.0001	P53160.INM12X50CIN	60	18	28	16	6.5	15	M12	50	329	33
P53160.0002	P53160.INM12X70CIN	60	18	28	16	6.5	15	M12	70	342	33
P53160.0003	P53160.INM12X90CIN	60	18	28	16	6.5	15	M12	90	357	33
P53160.0004	P53160.INM12X110CIN	60	18	28	16	6.5	15	M12	110	373	33
P53160.0005	P53160.INM14X50CIN	60	18	28	16	6.5	15	M14	50	341	33
P53160.0037	P53160.INM14X70CIN	60	18	28	16	6.5	15	M14	70	361	33
P53160.0006	P53160.INM14X90CIN	60	18	28	16	6.5	15	M14	90	382	33
P53160.0007	P53160.INM14X110CIN	60	18	28	16	6.5	15	M14	110	399	33
P53160.0008	P53160.INM14X130CIN	60	18	28	16	6.5	15	M14	130	416	33
P53160.0009	P53160.INM14X150CIN	60	18	28	16	6.5	15	M14	150	433	33
P53160.0010	P53160.INM16X50CIN	60	18	28	16	6.5	15	M16	50	357	50
P53160.0011	P53160.INM16X70CIN	60	18	28	16	6.5	15	M16	70	383	50
P53160.0012	P53160.INM16X90CIN	60	18	28	16	6.5	15	M16	90	409	50
P53160.0013	P53160.INM16X110CIN	60	18	28	16	6.5	15	M16	110	434	50
P53160.0014	P53160.INM16X130CIN	60	18	28	16	6.5	15	M16	130	460	50
P53160.0015	P53160.INM16X150CIN	60	18	28	16	6.5	15	M16	150	485	50
P53160.0016	P53160.INM16X170CIN	60	18	28	16	6.5	15	M16	170	513	50
P53160.0017	P53160.INM16X190CIN	60	18	28	16	6.5	15	M16	190	536	50

Attention: The expressed load limit F1 is lower than the break load by 30% and is intended as static.
Customised stud length available for a minimum of 100 pieces.

P532

+200° -40° | AVP | Aisi 303 | RoHS COMPLIANT

16 FULL STEEL MOUNTING FOOT WITH ARTICULATED STEM TYPE B - BALL 12.4

Piedi metallo con stelo snodato

Materials:

P532:

Turned free-cutting steel mounting foot base.

P532CIN:

Turned stainless steel mounting foot base (Aisi 303).

Surface finish:

Smooth.

Colour:

P532:

Standard blue galvanising.

P532CIN:

Natural.

Inserts:

P532:

Galvanised steel threaded and articulated stem (ball 12.5) with milled seat for wrench (type B) (thread tolerance 6g).

P532CIN:

Stainless steel threaded and articulated stem (ball 12.5) with milled seat for wrench (type B) (Aisi 303) (thread tolerance 6g).

Stem fixing method:

The stem cannot be disassembled. The ball cannot be removed as the edge of its seat has been pressed in.

Special requests:

Upon request and for special quantities inserts can be supplied with customised lengths.

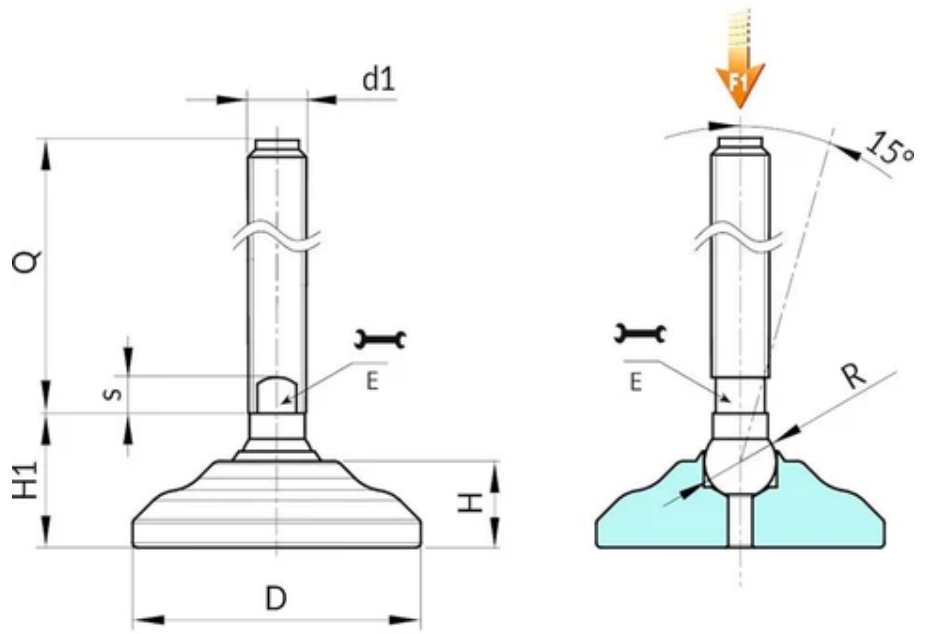

Version P532: Galvanised steel mounting foot with stem type B (with milled seat for wrench) and ball 12.5

Code	Art.	D	H	H1	E	s	R	d1 6g	Q	Weight (g)	F1 (kN)
P53260.0008	P53260.VZM16X50	60	18	28	13	7	12.5	M16	50	338	23
P53260.0009	P53260.VZM16X70	60	18	28	13	7	12.5	M16	70	364	23
P53260.0010	P53260.VZM16X90	60	18	28	13	7	12.5	M16	90	390	23
P53260.0011	P53260.VZM16X110	60	18	28	13	7	12.5	M16	110	416	23
P53260.0012	P53260.VZM16X130	60	18	28	13	7	12.5	M16	130	442	23
P53260.0013	P53260.VZM16X150	60	18	28	13	7	12.5	M16	150	468	23
P53260.0014	P53260.VZM16X170	60	18	28	13	7	12.5	M16	170	494	23

Attention: The expressed load limit F1 is lower than the break load by 30% and is intended as static.
Customised stud length available for a minimum of 100 pieces.

Version P532CIN: Stainless steel mounting foot with stem type B (with milled seat for wrench) and ball 12.5

Code	Art.	D	H	H1	E	s	R	d1 6g	Q	Weight (g)	F1 (kN)
P53260.0001	P53260.INM16X50CIN	60	18	28	13	7	12.4	M16	50	338	23
P53260.0002	P53260.INM16X70CIN	60	18	28	13	7	12.4	M16	70	364	23
P53260.0003	P53260.INM16X90CIN	60	18	28	13	7	12.4	M16	90	390	23
P53260.0004	P53260.INM16X110CIN	60	18	28	13	7	12.4	M16	110	416	23
P53260.0005	P53260.INM16X130CIN	60	18	28	13	7	12.4	M16	130	442	23
P53260.0006	P53260.INM16X150CIN	60	18	28	13	7	12.4	M16	150	468	23
P53260.0007	P53260.INM16X170CIN	60	18	28	13	7	12.4	M16	170	494	23

Attention: The expressed load limit F1 is lower than the break load by 30% and is intended as static.

Customised stud length available for a minimum of 100 pieces.

P533

+200° -40° | AVP | Aisi 303 | RoHS COMPLIANT

16 FULL STEEL MOUNTING FOOT WITH ARTICULATED STEM TYPE B - BALL 15

Piedi metallo con stelo snodato

Materials:

P533:

Turned free-cutting steel mounting foot base.

P533CIN:

Turned stainless steel mounting foot base (Aisi 303).

Surface finish:

Smooth.

Colour:

P533:

Standard blue galvanising.

P533CIN:

Natural.

Inserts:

P533:

Galvanised steel threaded and articulated stem (ball 15) with milled seat for wrench (type B) (thread tolerance 6g).

P533CIN:

Stainless steel threaded and articulated stem (ball 15) with milled seat for wrench (type B) (Aisi 304) (thread tolerance 6g).

Stem fixing method:

The stem cannot be disassembled. The ball cannot be removed as the edge of its seat has been pressed in.

Special requests:

Upon request and for special quantities inserts can be supplied with customised lengths.

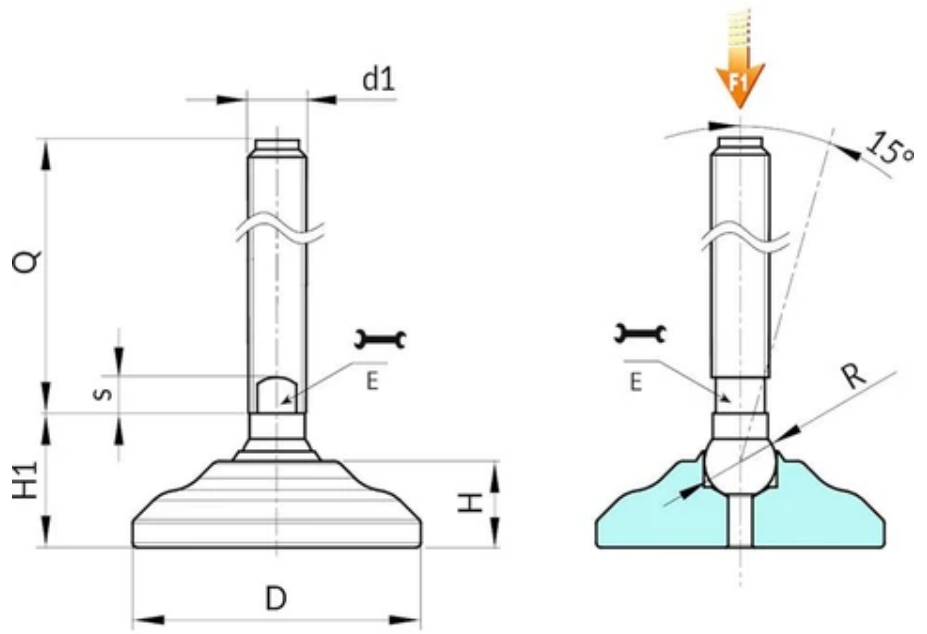

Version P533: Galvanised steel mounting foot with stem type B (with milled seat for wrench) and ball 15

Code	Art.	D	H	H1	E	s	R	d1 6g	Q	Weight (g)	F1 (kN)
P53350.0015	P53350.VZM20X90	50	13,5	23	16	7	15	M20	90	372	50
P53350.0016	P53350.VZM20X110	50	13,5	23	16	7	15	M20	110	404	50
P53350.0017	P53350.VZM20X130	50	13,5	23	16	7	15	M20	130	436	50
P53350.0018	P53350.VZM20X150	50	13,5	23	16	7	15	M20	150	471	50
P53350.0019	P53350.VZM20X170	50	13,5	23	16	7	15	M20	170	503	50
P53350.0020	P53350.VZM20X190	50	13,5	23	16	7	15	M20	190	536	50
P53350.0021	P53350.VZM20X210	50	13,5	23	16	7	15	M20	210	571	50
P53360.0015	P53360.VZM20X90	60	18	28	16	7	15	M20	90	472	50
P53360.0016	P53360.VZM20X110	60	18	28	16	7	15	M20	110	504	50
P53360.0017	P53360.VZM20X130	60	18	28	16	7	15	M20	130	536	50
P53360.0018	P53360.VZM20X150	60	18	28	16	7	15	M20	150	571	50
P53360.0019	P53360.VZM20X170	60	18	28	16	7	15	M20	170	603	50
P53360.0020	P53360.VZM20X190	60	18	28	16	7	15	M20	190	636	50
P53360.0021	P53360.VZM20X210	60	18	28	16	7	15	M20	210	671	50
P53340.0022	P53340.VZM24X90	40	11,5	20	19	7	15	M24	90	433	50
P53340.0023	P53340.VZM24X110	40	11,5	20	19	7	15	M24	110	493	50
P53340.0024	P53340.VZM24X130	40	11,5	20	19	7	15	M24	130	553	50
P53340.0025	P53340.VZM24X150	40	11,5	20	19	7	15	M24	150	613	50
P53340.0026	P53340.VZM24X170	40	11,5	20	19	7	15	M24	170	673	50
P53340.0027	P53340.VZM24X190	40	11,5	20	19	7	15	M24	190	733	50
P53340.0028	P53340.VZM24X210	40	11,5	20	19	7	15	M24	210	793	50

Code	Art.	D	H	H1	E	s	R	d1 6g	Q	Weight (g)	F1 (kN)
P53350.0022	P53350.VZM24X90	50	13,5	23	19	7	15	M24	90	496	50
P53350.0023	P53350.VZM24X110	50	13,5	23	19	7	15	M24	110	556	50
P53350.0024	P53350.VZM24X130	50	13,5	23	19	7	15	M24	130	616	50
P53350.0025	P53350.VZM24X150	50	13,5	23	19	7	15	M24	150	676	50
P53350.0026	P53350.VZM24X170	50	13,5	23	19	7	15	M24	170	736	50
P53350.0027	P53350.VZM24X190	50	13,5	23	19	7	15	M24	190	796	50
P53350.0028	P53350.VZM24X210	50	13,5	23	19	7	15	M24	210	856	50
P53360.0022	P53360.VZM24X90	60	18	28	19	7	15	M24	90	596	50
P53360.0023	P53360.VZM24X110	60	18	28	19	7	15	M24	110	656	50
P53360.0024	P53360.VZM24X130	60	18	28	19	7	15	M24	130	716	50
P53360.0025	P53360.VZM24X150	60	18	28	19	7	15	M24	150	776	50
P53360.0026	P53360.VZM24X170	60	18	28	19	7	15	M24	170	836	50
P53360.0027	P53360.VZM24X190	60	18	28	19	7	15	M24	190	896	50
P53360.0028	P53360.VZM24X210	60	18	28	19	7	15	M24	210	956	50

Attention: The expressed load limit F1 is lower than the break load by 30% and is intended as static.
Customised stud length available for a minimum of 100 pieces.

Version P533CIN: Stainless steel mounting foot with stem type B (with milled seat for wrench) and ball 15

Code	Art.	D	H	H1	E	s	R	d1 6g	Q	Weight (g)	F1 (kN)
P53340.0001	P53340.INM20X90CIN	40	11,5	20	16	7	15	M20	90	309	50
P53340.0002	P53340.INM20X110CIN	40	11,5	20	16	7	15	M20	110	341	50
P53340.0003	P53340.INM20X130CIN	40	11,5	20	16	7	15	M20	130	373	50
P53340.0004	P53340.INM20X150CIN	40	11,5	20	16	7	15	M20	150	408	50
P53340.0005	P53340.INM20X170CIN	40	11,5	20	16	7	15	M20	170	440	50
P53340.0006	P53340.INM20X190CIN	40	11,5	20	16	7	15	M20	190	473	50
P53340.0007	P53340.INM20X210CIN	40	11,5	20	16	7	15	M20	210	508	50
P53350.0001	P53350.INM20X90CIN	50	13,5	23	16	7	15	M20	90	372	50
P53350.0002	P53350.INM20X110CIN	50	13,5	23	16	7	15	M20	110	404	50
P53350.0003	P53350.INM20X130CIN	50	13,5	23	16	7	15	M20	130	436	50
P53350.0004	P53350.INM20X150CIN	50	13,5	23	16	7	15	M20	150	471	50
P53350.0005	P53350.INM20X170CIN	50	13,5	23	16	7	15	M20	170	503	50
P53350.0006	P53350.INM20X190CIN	50	13,5	23	16	7	15	M20	190	536	50
P53350.0007	P53350.INM20X210CIN	50	13,5	23	16	7	15	M20	210	571	50
P53360.0001	P53360.INM20X90CIN	60	18	28	16	7	15	M20	90	472	50
P53360.0002	P53360.INM20X110CIN	60	18	28	16	7	15	M20	110	504	50
P53360.0003	P53360.INM20X130CIN	60	18	28	16	7	15	M20	130	536	50
P53360.0004	P53360.INM20X150CIN	60	18	28	16	7	15	M20	150	571	50
P53360.0005	P53360.INM20X170CIN	60	18	28	16	7	15	M20	170	603	50
P53360.0006	P53360.INM20X190CIN	60	18	28	16	7	15	M20	190	636	50
P53360.0007	P53360.INM20X210CIN	60	18	28	16	7	15	M20	210	671	50

Code	Art.	D	H	H1	E	s	R	d1 6g	Q	Weight (g)	F1 (kN)
P53340.0008	P53340.INM24X90CIN	40	11,5	20	19	7	15	M24	90	433	50
P53340.0009	P53340.INM24X110CIN	40	11,5	20	19	7	15	M24	110	493	50
P53340.0010	P53340.INM24X130CIN	40	11,5	20	19	7	15	M24	130	553	50
P53340.0011	P53340.INM24X150CIN	40	11,5	20	19	7	15	M24	150	613	50
P53340.0012	P53340.INM24X170CIN	40	11,5	20	19	7	15	M24	170	673	50
P53340.0013	P53340.INM24X190CIN	40	11,5	20	19	7	15	M24	190	733	50
P53340.0014	P53340.INM24X210CIN	40	11,5	20	19	7	15	M24	210	793	50
P53350.0008	P53350.INM24X90CIN	50	13,5	23	19	7	15	M24	90	496	50
P53350.0009	P53350.INM24X110CIN	50	13,5	23	19	7	15	M24	110	556	50
P53350.0010	P53350.INM24X130CIN	50	13,5	23	19	7	15	M24	130	616	50
P53350.0011	P53350.INM24X150CIN	50	13,5	23	19	7	15	M24	150	676	50
P53350.0012	P53350.INM24X170CIN	50	13,5	23	19	7	15	M24	170	736	50
P53350.0013	P53350.INM24X190CIN	50	13,5	23	19	7	15	M24	190	796	50
P53350.0014	P53350.INM24X210CIN	50	13,5	23	19	7	15	M24	210	856	50

Attention: The expressed load limit F1 is lower than the break load by 30% and is intended as static.
Customised stud length available for a minimum of 100 pieces.

P534

+200° -40° | AVP | Aisi 303 | RoHS COMPLIANT

16 FULL STEEL MOUNTING FOOT WITH ARTICULATED STEM TYPE A - BALL 24

Piedi metallo con stelo snodato

Materials:

P534:

Turned free-cutting steel mounting foot base.

P534CIN:

Turned stainless steel mounting foot base (Aisi 303).

Surface finish:

Smooth.

Colour:

P534:

Standard blue galvanising.

P534CIN:

Natural.

Inserts:

P534:

Galvanised steel threaded and articulated stem (ball 24) with hexagonal base (thread tolerance 6g).

P534CIN:

Stainless steel threaded and articulated stem (ball 24) with hexagonal base (Aisi 303) (thread tolerance 6g).

Stem fixing method:

The stem cannot be disassembled. The ball cannot be removed as the edge of its seat has been pressed in.

Special requests:

Upon request and for special quantities inserts can be supplied with customised lengths.

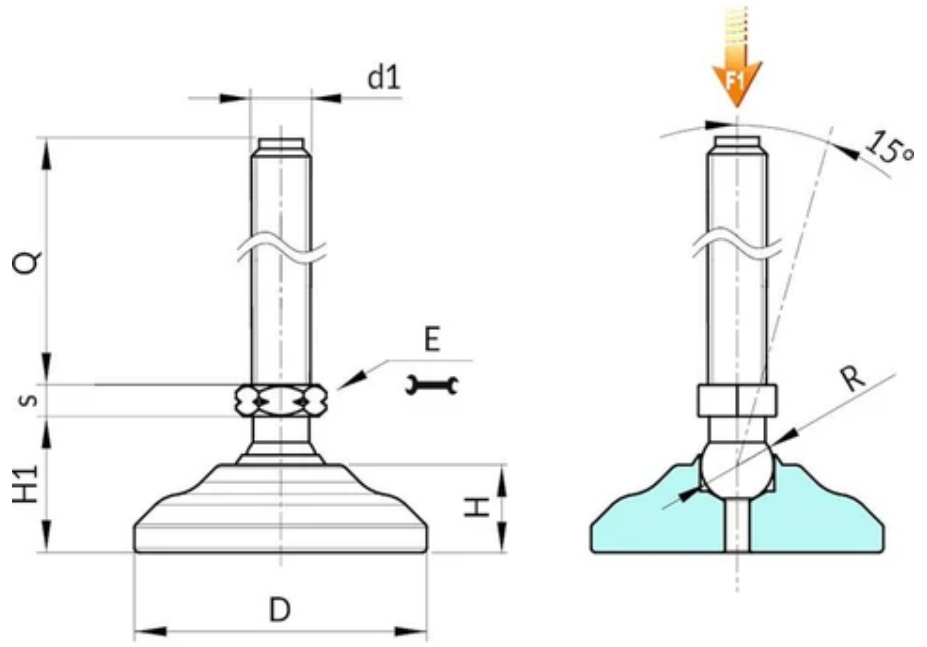

Version P534: Galvanised steel mounting foot with stem type A (with hexagonal base) and ball 24

Code	Art.	D	H	H1	E	s	R	d1 6g	Q	Weight (g)	F1 (kN)
P53460.0012	P53460.VZM16X90	60	18	40	13	7	24	M16	90	-	60
P53460.0013	P53460.VZM16X110	60	18	40	13	7	24	M16	110	-	60
P53460.0014	P53460.VZM16X130	60	18	40	13	7	24	M16	130	-	60
P53460.0015	P53460.VZM16X150	60	18	40	13	7	24	M16	150	-	60
P53460.0016	P53460.VZM16X170	60	18	40	13	7	24	M16	170	-	60
P53460.0017	P53460.VZM20X90	60	18	40	16	7	24	M20	90	-	90
P53460.0018	P53460.VZM20X110	60	18	40	16	7	24	M20	110	-	90
P53460.0019	P53460.VZM20X130	60	18	40	16	7	24	M20	130	-	90
P53460.0020	P53460.VZM20X150	60	18	40	16	7	24	M20	150	-	90
P53460.0021	P53460.VZM20X170	60	18	40	16	7	24	M20	170	-	90

Attention: The expressed load limit F1 is lower than the break load by 30% and is intended as static.
Customised stud length available for a minimum of 100 pieces.

Version P534CIN: Stainless steel mounting foot with stem type A (with hexagonal base) and ball 24

Code	Art.	D	H	H1	E	s	R	d1 6g	Q	Weight (g)	F1 (kN)
P53460.0001	P53460.INM16X90CIN	60	18	40	13	7	24	M16	90	-	60
P53460.0002	P53460.INM16X110CIN	60	18	40	13	7	24	M16	110	-	60
P53460.0003	P53460.INM16X130CIN	60	18	40	13	7	24	M16	130	-	60
P53460.0004	P53460.INM16X150CIN	60	18	40	13	7	24	M16	150	-	60
P53460.0006	P53460.INM20X90CIN	60	18	40	16	7	24	M20	90	-	90

Code	Art.	D	H	H1	E	s	R	d1 6g	Q	Weight (g)	F1 (kN)
P53460.0007	P53460.INM20X110CIN	60	18	40	16	7	24	M20	110	-	90
P53460.0008	P53460.INM20X130CIN	60	18	40	16	7	24	M20	130	-	90
P53460.0009	P53460.INM20X150CIN	60	18	40	16	7	24	M20	150	-	90
P53460.0010	P53460.INM20X170CIN	60	18	40	16	7	24	M20	170	-	90

Attention: The expressed load limit F1 is lower than the break load by 30% and is intended as static.
Customised stud length available for a minimum of 100 pieces.

P540

+135° -30° | AVP | Aisi 303 | SBS | RoHS COMPLIANT

16

FULL STEEL MOUNTING FOOT WITH ARTICULATED STEM TYPE A - BALL 12.5 AND NON-SLIP BASE

Piedi metallo con stelo snodato + antiscivolo

Materials:

P540:

Turned free-cutting steel mounting foot base.

P540CIN:

Turned stainless steel mounting foot base (Aisi 303).

Surface finish:

Smooth.

Colour:

P540:

Standard blue galvanising.

P540CIN:

Natural.

Inserts:

P540:

Galvanised steel threaded and articulated stem (ball 12.5) with hexagonal base (thread tolerance 6g).

P540CIN:

Stainless steel threaded and articulated stem (ball 12.5) with hexagonal base (Aisi 303) (thread tolerance 6g).

Stem fixing method:

The stem cannot be disassembled. The ball cannot be removed as the edge of its seat has been pressed in.

Non-slip base:

Non-slip base in thermoplastic rubber TPV 75 Shore, black RAL 9011.

Resistant to oils and greases. Push-fit assembly.

Special requests:

Upon request and for special quantities inserts can be supplied with customised lengths.

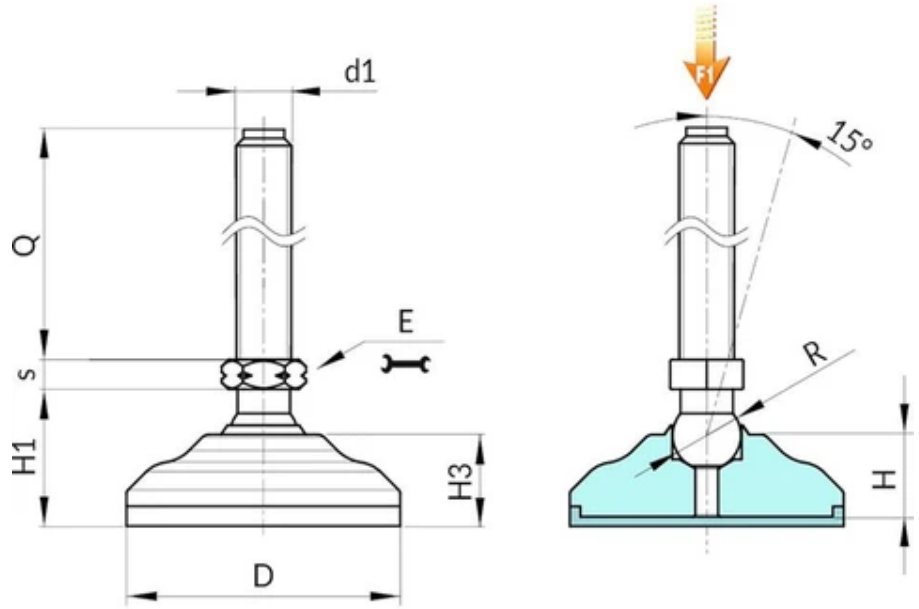

Version P540: Galvanised steel mounting foot with stem type A (with hexagonal base) and ball 12.5 - with TPV non-slip base

Code	Art.	D	H	H1	H3	E	s	R	d1 6g	Q	Weight (g)	F1_(kN)
P54040.0009	P54040.VZM08X45	40	15	26	17.5	13	5	12.5	M8	45	136	13
P54040.0010	P54040.VZM08X70	40	15	26	17.5	13	5	12.5	M8	70	143	13
P54040.0011	P54040.VZM10X45	40	15	26	17.5	13	5	12.5	M10	45	144	23
P54040.0012	P54040.VZM10X70	40	15	26	17.5	13	5	12.5	M10	70	156	23
P54040.0013	P54040.VZM10X100	40	15	26	17.5	13	5	12.5	M10	100	183	23
P54040.0014	P54040.VZM12X45	40	15	26	17.5	13	5	12.5	M12	45	153	23
P54040.0015	P54040.VZM12X70	40	15	26	17.5	13	5	12.5	M12	70	172	23
P54040.0016	P54040.VZM12X100	40	15	26	17.5	13	5	12.5	M12	100	192	23
P54050.0010	P54050.VZM08X45	50	17.5	29.5	20	13	5	12.5	M8	45	205	13
P54050.0011	P54050.VZM08X70	50	17.5	29.5	20	13	5	12.5	M8	70	212	13
P54050.0012	P54050.VZM10X45	50	17.5	29.5	20	13	5	12.5	M10	45	213	23
P54050.0013	P54050.VZM10X70	50	17.5	29.5	20	13	5	12.5	M10	70	225	23
P54050.0014	P54050.VZM10X100	50	17.5	29.5	20	13	5	12.5	M10	100	250	23
P54050.0016	P54050.VZM12X45	50	17.5	29.5	20	13	5	12.5	M12	45	222	23
P54050.0017	P54050.VZM12X70	50	17.5	29.5	20	13	5	12.5	M12	70	241	23
P54050.0018	P54050.VZM12X100	50	17.5	29.5	20	13	5	12.5	M12	100	261	23
P54060.0009	P54060.VZM08X45	60	19.5	32	22	13	5	12.5	M8	45	310	13
P54060.0010	P54060.VZM08X70	60	19.5	32	22	13	5	12.5	M8	70	317	13
P54060.0011	P54060.VZM10X45	60	19.5	32	22	13	5	12.5	M10	45	318	23
P54060.0012	P54060.VZM10X70	60	19.5	32	22	13	5	12.5	M10	70	330	23
P54060.0013	P54060.VZM10X100	60	19.5	32	22	13	5	12.5	M10	100	355	23

Code	Art.	D	H	H1	H3	E	s	R	d1 6g	Q	Weight (g)	F1_(kN)
P54060.0015	P54060.VZM12X45	60	19.5	32	22	13	5	12.5	M12	45	327	23
P54060.0016	P54060.VZM12X70	60	19.5	32	22	13	5	12.5	M12	70	346	23
P54060.0014	P54060.VZM12X100	60	19.5	32	22	13	5	12.5	M12	100	366	23

Attention: The expressed load limit F1 is lower than the break load by 30% and is intended as static.
Customised stud length available for a minimum of 100 pieces.

Version P540CIN: Stainless steel mounting foot with stem type A (with hexagonal base) and ball 12.5 - with TPV non-slip base

Code	Art.	D	H	H1	H3	E	s	R	d1 6g	Q	Weight (g)	F1_(kN)
P54040.0001	P54040.INM08X45CIN	40	15	26	17.5	13	5	12.5	M8	45	136	13
P54040.0002	P54040.INM08X70CIN	40	15	26	17.5	13	5	12.5	M8	70	143	13
P54040.0003	P54040.INM10X45CIN	40	15	26	17.5	13	5	12.5	M10	45	144	23
P54040.0004	P54040.INM10X70CIN	40	15	26	17.5	13	5	12.5	M10	70	156	23
P54040.0005	P54040.INM10X100CIN	40	15	26	17.5	13	5	12.5	M10	100	183	23
P54040.0006	P54040.INM12X45CIN	40	15	26	17.5	13	5	12.5	M12	45	153	23
P54040.0007	P54040.INM12X70CIN	40	15	26	17.5	13	5	12.5	M12	70	172	23
P54040.0008	P54040.INM12X100CIN	40	15	26	17.5	13	5	12.5	M12	100	192	23
P54050.0001	P54050.INM08X45CIN	50	17.5	29.5	20	13	5	12.5	M8	45	205	13
P54050.0002	P54050.INM08X70CIN	50	17.5	29.5	20	13	5	12.5	M8	70	212	13
P54050.0003	P54050.INM10X45CIN	50	17.5	29.5	20	13	5	12.5	M10	45	213	23
P54050.0004	P54050.INM10X70CIN	50	17.5	29.5	20	13	5	12.5	M10	70	225	23
P54050.0005	P54050.INM10X100CIN	50	17.5	29.5	20	13	5	12.5	M10	100	250	23
P54050.0006	P54050.INM12X45CIN	50	17.5	29.5	20	13	5	12.5	M12	45	222	23
P54050.0007	P54050.INM12X70CIN	50	17.5	29.5	20	13	5	12.5	M12	70	241	23
P54050.0008	P54050.INM12X100CIN	50	17.5	29.5	20	13	5	12.5	M12	100	261	23
P54060.0001	P54060.INM08X45CIN	60	19.5	32	22	13	5	12.5	M8	45	310	13
P54060.0002	P54060.INM08X70CIN	60	19.5	32	22	13	5	12.5	M8	70	317	13
P54060.0003	P54060.INM10X45CIN	60	19.5	32	22	13	5	12.5	M10	45	318	23
P54060.0004	P54060.INM10X70CIN	60	19.5	32	22	13	5	12.5	M10	70	330	23
P54060.0005	P54060.INM10X100CIN	60	19.5	32	22	13	5	12.5	M10	100	355	23
P54060.0006	P54060.INM12X45CIN	60	19.5	32	22	13	5	12.5	M12	45	327	23
P54060.0007	P54060.INM12X70CIN	60	19.5	32	22	13	5	12.5	M12	70	346	23
P54060.0008	P54060.INM12X100CIN	60	19.5	32	22	13	5	12.5	M12	100	366	23

Attention: The expressed load limit F1 is lower than the break load by 30% and is intended as static.
Customised stud length available for a minimum of 100 pieces.

P541

+135° -30° | AVP | Aisi 303 | SBS | RoHS COMPLIANT

16

FULL STEEL MOUNTING FOOT WITH ARTICULATED STEM TYPE A - BALL 15 AND NON-SLIP BASE

Piedi metallo con stelo snodato + antiscivolo

Materials:

P541:

Turned free-cutting steel mounting foot base.

P541CIN:

Turned stainless steel mounting foot base (Aisi 303).

Surface finish:

Smooth.

Colour:

Standard blue galvanising.

P541:

Inserts:

P541:

Stem fixing method:

The stem cannot be disassembled. The ball cannot be removed as the edge of its seat has been pressed in.

Non-slip base:

Non-slip base in thermoplastic rubber TPV 75 Shore, black RAL 9011.

Special requests:

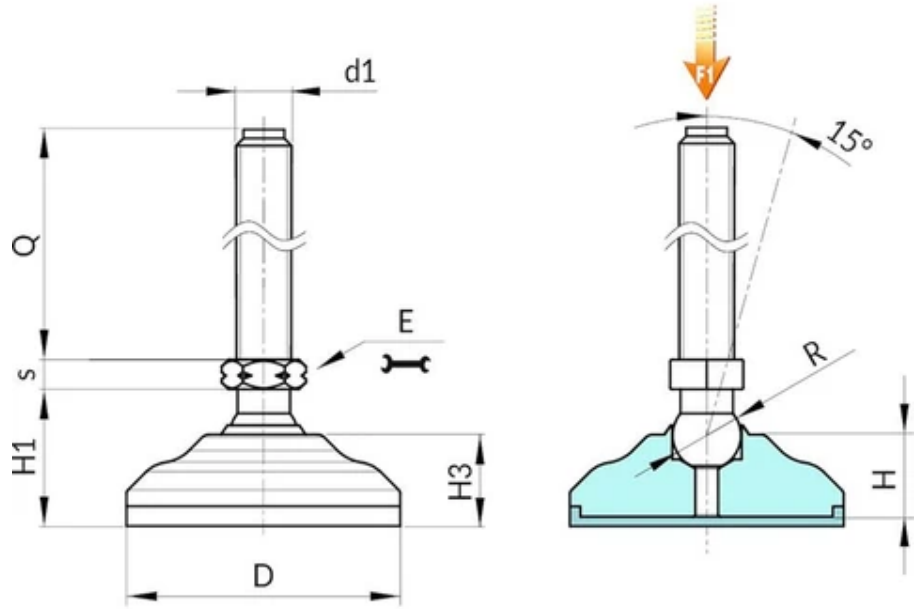

Version P541: Galvanised steel mounting foot with stem type A (with hexagonal base) and ball 15 - with TPV non-slip base

Code	Art.	D	H	H1	H3	E	s	R	d1 6g	Q	Weight (g)	F1_(kN)
P54140.0019	P54140.VZM12X50	40	15	26	17.5	16	6.5	15	M12	50	170	33
P54140.0020	P54140.VZM12X70	40	15	26	17.5	16	6.5	15	M12	70	183	33
P54140.0021	P54140.VZM12X90	40	15	26	17.5	16	6.5	15	M12	90	198	33
P54140.0022	P54140.VZM12X110	40	15	26	17.5	16	6.5	15	M12	110	214	33
P54140.0023	P54140.VZM14X50	40	15	26	17.5	16	6.5	15	M14	50	182	33
P54140.0024	P54140.VZM14X70	40	15	26	17.5	16	6.5	15	M14	70	202	33
P54140.0025	P54140.VZM14X90	40	15	26	17.5	16	6.5	15	M14	90	223	33
P54140.0026	P54140.VZM14X110	40	15	26	17.5	16	6.5	15	M14	110	240	33
P54140.0027	P54140.VZM14X130	40	15	26	17.5	16	6.5	15	M14	130	258	33
P54140.0028	P54140.VZM14X150	40	15	26	17.5	16	6.5	15	M14	150	274	33
P54140.0029	P54140.VZM16X50	40	15	26	17.5	16	6.5	15	M16	50	198	50
P54140.0030	P54140.VZM16X70	40	15	26	17.5	16	6.5	15	M16	70	224	50
P54140.0031	P54140.VZM16X90	40	15	26	17.5	16	6.5	15	M16	90	250	50
P54140.0032	P54140.VZM16X110	40	15	26	17.5	16	6.5	15	M16	110	275	50
P54140.0033	P54140.VZM16X130	40	15	26	17.5	16	6.5	15	M16	130	301	50
P54140.0034	P54140.VZM16X150	40	15	26	17.5	16	6.5	15	M16	150	326	50
P54140.0035	P54140.VZM16X170	40	15	26	17.5	16	6.5	15	M16	170	354	50
P54140.0036	P54140.VZM16X190	40	15	26	17.5	16	6.5	15	M16	190	377	50
P54150.0019	P54150.VZM12X50	50	17.5	29.5	20	16	6.5	15	M12	50	239	33
P54150.0022	P54150.VZM12X70	50	17.5	29.5	20	16	6.5	15	M12	70	252	33
P54150.0020	P54150.VZM12X90	50	17.5	29.5	20	16	6.5	15	M12	90	267	33

Code	Art.	D	H	H1	H3	E	s	R	d1 6g	Q	Weight (g)	F1_(kN)
P54150.0021	P54150.VZM12X110	50	17.5	29.5	20	16	6.5	15	M12	110	283	33
P54150.0023	P54150.VZM14X50	50	17.5	29.5	20	16	6.5	15	M14	50	251	33
P54150.0024	P54150.VZM14X70	50	17.5	29.5	20	16	6.5	15	M14	70	271	33
P54150.0025	P54150.VZM14X90	50	17.5	29.5	20	16	6.5	15	M14	90	292	33
P54150.0026	P54150.VZM14X110	50	17.5	29.5	20	16	6.5	15	M14	110	309	33
P54150.0027	P54150.VZM14X130	50	17.5	29.5	20	16	6.5	15	M14	130	326	33
P54150.0028	P54150.VZM14X150	50	17.5	29.5	20	16	6.5	15	M14	150	343	33
P54150.0029	P54150.VZM16X50	50	17.5	29.5	20	16	6.5	15	M16	50	267	50
P54150.0030	P54150.VZM16X70	50	17.5	29.5	20	16	6.5	15	M16	70	293	50
P54150.0031	P54150.VZM16X90	50	17.5	29.5	20	16	6.5	15	M16	90	319	50
P54150.0032	P54150.VZM16X110	50	17.5	29.5	20	16	6.5	15	M16	110	344	50
P54150.0033	P54150.VZM16X130	50	17.5	29.5	20	16	6.5	15	M16	130	370	50
P54150.0034	P54150.VZM16X150	50	17.5	29.5	20	16	6.5	15	M16	150	395	50
P54150.0035	P54150.VZM16X170	50	17.5	29.5	20	16	6.5	15	M16	170	423	50
P54150.0036	P54150.VZM16X190	50	17.5	29.5	20	16	6.5	15	M16	190	446	50
P54160.0019	P54160.VZM12X50	60	19.5	32	22	16	6.5	15	M12	50	339	33
P54160.0020	P54160.VZM12X70	60	19.5	32	22	16	6.5	15	M12	70	352	33
P54160.0021	P54160.VZM12X90	60	19.5	32	22	16	6.5	15	M12	90	367	33
P54160.0022	P54160.VZM12X110	60	19.5	32	22	16	6.5	15	M12	110	383	33
P54160.0023	P54160.VZM14X50	60	19.5	32	22	16	6.5	15	M14	50	351	33
P54160.0024	P54160.VZM14X70	60	19.5	32	22	16	6.5	15	M14	70	371	33
P54160.0025	P54160.VZM14X90	60	19.5	32	22	16	6.5	15	M14	90	392	33
P54160.0026	P54160.VZM14X110	60	19.5	32	22	16	6.5	15	M14	110	409	33
P54160.0027	P54160.VZM14X130	60	19.5	32	22	16	6.5	15	M14	130	426	33
P54160.0028	P54160.VZM14X150	60	19.5	32	22	16	6.5	15	M14	150	443	33
P54160.0029	P54160.VZM16X50	60	19.5	32	22	16	6.5	15	M16	50	367	50
P54160.0030	P54160.VZM16X70	60	19.5	32	22	16	6.5	15	M16	70	393	50
P54160.0031	P54160.VZM16X90	60	19.5	32	22	16	6.5	15	M16	90	419	50
P54160.0032	P54160.VZM16X110	60	19.5	32	22	16	6.5	15	M16	110	444	50
P54160.0033	P54160.VZM16X130	60	19.5	32	22	16	6.5	15	M16	130	470	50
P54160.0034	P54160.VZM16X150	60	19.5	32	22	16	6.5	15	M16	150	495	50
P54160.0035	P54160.VZM16X170	60	19.5	32	22	16	6.5	15	M16	170	523	50
P54160.0036	P54160.VZM16X190	60	19.5	32	22	16	6.5	15	M16	190	546	50

Attention: The expressed load limit F1 is lower than the break load by 30% and is intended as static.
Customised stud length available for a minimum of 100 pieces.

Version P541CIN: Stainless steel mounting foot with stem type A (with hexagonal base) and ball 15 - with TPV non-slip base

Code	Art.	D	H	H1	H3	E	s	R	d1 6g	Q	Weight (g)	F1_(kN)
P54140.0001	P54140.INM12X50CIN	40	15	26	17.5	16	6.5	15	M12	50	170	33
P54140.0002	P54140.INM12X70CIN	40	15	26	17.5	16	6.5	15	M12	70	183	33

Code	Art.	D	H	H1	H3	E	s	R	d1 6g	Q	Weight (g)	F1_(kN)
P54140.0003	P54140.INM12X90CIN	40	15	26	17.5	16	6.5	15	M12	90	198	33
P54140.0004	P54140.INM12X110CIN	40	15	26	17.5	16	6.5	15	M12	110	214	33
P54140.0005	P54140.INM14X50CIN	40	15	26	17.5	16	6.5	15	M14	50	182	33
P54140.0006	P54140.INM14X70CIN	40	15	26	17.5	16	6.5	15	M14	70	202	33
P54140.0007	P54140.INM14X90CIN	40	15	26	17.5	16	6.5	15	M14	90	223	33
P54140.0008	P54140.INM14X110CIN	40	15	26	17.5	16	6.5	15	M14	110	240	33
P54140.0009	P54140.INM14X130CIN	40	15	26	17.5	16	6.5	15	M14	130	258	33
P54140.0010	P54140.INM14X150CIN	40	15	26	17.5	16	6.5	15	M14	150	274	33
P54140.0011	P54140.INM16X50CIN	40	15	26	17.5	16	6.5	15	M16	50	198	50
P54140.0012	P54140.INM16X70CIN	40	15	26	17.5	16	6.5	15	M16	70	224	50
P54140.0013	P54140.INM16X90CIN	40	15	26	17.5	16	6.5	15	M16	90	250	50
P54140.0014	P54140.INM16X110CIN	40	15	26	17.5	16	6.5	15	M16	110	275	50
P54140.0015	P54140.INM16X130CIN	40	15	26	17.5	16	6.5	15	M16	130	301	50
P54140.0016	P54140.INM16X150CIN	40	15	26	17.5	16	6.5	15	M16	150	326	50
P54140.0017	P54140.INM16X170CIN	40	15	26	17.5	16	6.5	15	M16	170	354	50
P54140.0018	P54140.INM16X190CIN	40	15	26	17.5	16	6.5	15	M16	190	377	50
P54150.0001	P54150.INM12X50CIN	50	17.5	29.5	20	16	6.5	15	M12	50	239	33
P54150.0004	P54150.INM12X70CIN	50	17.5	29.5	20	16	6.5	15	M12	70	252	33
P54150.0002	P54150.INM12X90CIN	50	17.5	29.5	20	16	6.5	15	M12	90	267	33
P54150.0003	P54150.INM12X110CIN	50	17.5	29.5	20	16	6.5	15	M12	110	283	33
P54150.0005	P54150.INM14X50CIN	50	17.5	29.5	20	16	6.5	15	M14	50	251	33
P54150.0006	P54150.INM14X70CIN	50	17.5	29.5	20	16	6.5	15	M14	70	271	33
P54150.0007	P54150.INM14X90CIN	50	17.5	29.5	20	16	6.5	15	M14	90	292	33
P54150.0008	P54150.INM14X110CIN	50	17.5	29.5	20	16	6.5	15	M14	110	309	33
P54150.0009	P54150.INM14X130CIN	50	17.5	29.5	20	16	6.5	15	M14	130	326	33
P54150.0010	P54150.INM14X150CIN	50	17.5	29.5	20	16	6.5	15	M14	150	343	33
P54150.0011	P54150.INM16X50CIN	50	17.5	29.5	20	16	6.5	15	M16	50	267	50
P54150.0012	P54150.INM16X70CIN	50	17.5	29.5	20	16	6.5	15	M16	70	293	50
P54150.0013	P54150.INM16X90CIN	50	17.5	29.5	20	16	6.5	15	M16	90	319	50
P54150.0014	P54150.INM16X110CIN	50	17.5	29.5	20	16	6.5	15	M16	110	344	50
P54150.0015	P54150.INM16X130CIN	50	17.5	29.5	20	16	6.5	15	M16	130	370	50
P54150.0016	P54150.INM16X150CIN	50	17.5	29.5	20	16	6.5	15	M16	150	395	50
P54150.0017	P54150.INM16X170CIN	50	17.5	29.5	20	16	6.5	15	M16	170	423	50
P54150.0018	P54150.INM16X190CIN	50	17.5	29.5	20	16	6.5	15	M16	190	446	50
P54160.0001	P54160.INM12X50CIN	60	19.5	32	22	16	6.5	15	M12	50	339	33
P54160.0002	P54160.INM12X70CIN	60	19.5	32	22	16	6.5	15	M12	70	352	33
P54160.0003	P54160.INM12X90CIN	60	19.5	32	22	16	6.5	15	M12	90	367	33
P54160.0004	P54160.INM12X110CIN	60	19.5	32	22	16	6.5	15	M12	110	383	33
P54160.0005	P54160.INM14X50CIN	60	19.5	32	22	16	6.5	15	M14	50	351	33
P54160.0006	P54160.INM14X70CIN	60	19.5	32	22	16	6.5	15	M14	70	371	33

Code	Art.	D	H	H1	H3	E	s	R	d1 6g	Q	Weight (g)	F1_(kN)
P54160.0007	P54160.INM14X90CIN	60	19.5	32	22	16	6.5	15	M14	90	392	33
P54160.0008	P54160.INM14X110CIN	60	19.5	32	22	16	6.5	15	M14	110	409	33
P54160.0009	P54160.INM14X130CIN	60	19.5	32	22	16	6.5	15	M14	130	426	33
P54160.0010	P54160.INM14X150CIN	60	19.5	32	22	16	6.5	15	M14	150	443	33
P54160.0011	P54160.INM16X50CIN	60	19.5	32	22	16	6.5	15	M16	50	367	50
P54160.0012	P54160.INM16X70CIN	60	19.5	32	22	16	6.5	15	M16	70	393	50
P54160.0013	P54160.INM16X90CIN	60	19.5	32	22	16	6.5	15	M16	90	419	50
P54160.0014	P54160.INM16X110CIN	60	19.5	32	22	16	6.5	15	M16	110	444	50
P54160.0015	P54160.INM16X130CIN	60	19.5	32	22	16	6.5	15	M16	130	470	50
P54160.0016	P54160.INM16X150CIN	60	19.5	32	22	16	6.5	15	M16	150	495	50
P54160.0017	P54160.INM16X170CIN	60	19.5	32	22	16	6.5	15	M16	170	523	50
P54160.0018	P54160.INM16X190CIN	60	19.5	32	22	16	6.5	15	M16	190	546	50

Attention: The expressed load limit F1 is lower than the break load by 30% and is intended as static.
Customised stud length available for a minimum of 100 pieces.

P542

+135° -30° | AVP | Aisi 303 | SBS | RoHS COMPLIANT

16

FULL STEEL MOUNTING FOOT WITH ARTICULATED STEM TYPE B - BALL 12.5 AND NON-SLIP BASE

Piedi metallo con stelo snodato + antiscivolo

Materials:

P542:

Turned free-cutting steel mounting foot base.

P542CIN:

Turned stainless steel mounting foot base (Aisi 303).

Surface finish:

Smooth.

Colour:

P542:

Standard blue galvanising.

P542CIN:

Natural.

Inserts:

P542:

Galvanised steel threaded and articulated stem (ball 12.5) with milled seat for wrench (type B) (thread tolerance 6g).

P542CIN:

Stainless steel threaded and articulated stem (ball 12.5) with milled seat for wrench (type B) (Aisi 303) (thread tolerance 6g).

Stem fixing method:

The stem cannot be disassembled. The ball cannot be removed as the edge of its seat has been pressed in.

Non-slip base:

Non-slip base in thermoplastic rubber TPV 75 Shore, black RAL 9011.

Resistant to oils and greases. Push-fit assembly.

Special requests:

Upon request and for special quantities inserts can be supplied with customised lengths.

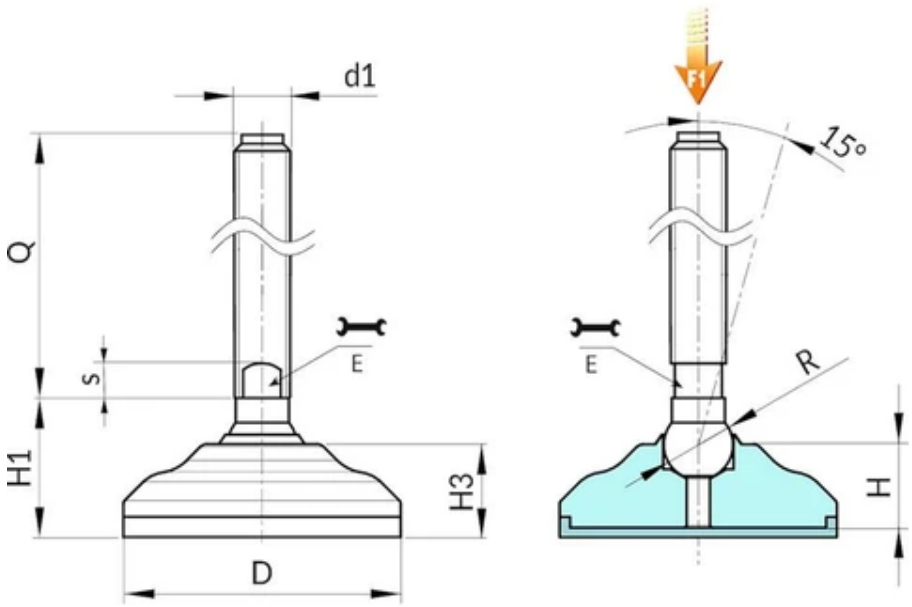

Version P542: Galvanised steel mounting foot with stem type B (with milled seat for wrench) and ball 12.5 - with TPV non-slip base

Code	Art.	D	H	H1	H3	E	s	R	d1 6g	Q	Weight (g)	F1 (kN)
P54260.0008	P54260.VZM16X50	60	19.5	32	22	13	7	12.5	M16	50	352	23
P54260.0009	P54260.VZM16X70	60	19.5	32	22	13	7	12.5	M16	70	379	23
P54260.0010	P54260.VZM16X90	60	19.5	32	22	13	7	12.5	M16	90	405	23
P54260.0011	P54260.VZM16X110	60	19.5	32	22	13	7	12.5	M16	110	431	23
P54260.0012	P54260.VZM16X130	60	19.5	32	22	13	7	12.5	M16	130	457	23
P54260.0013	P54260.VZM16X150	60	19.5	32	22	13	7	12.5	M16	150	483	23
P54260.0014	P54260.VZM16X170	60	19.5	32	22	13	7	12.5	M16	170	509	23

Attention: The expressed load limit F1 is lower than the break load by 30% and is intended as static.
Customised stud length available for a minimum of 100 pieces.

Version P542CIN: Stainless steel foot with stem type B (with milled seat for wrench) and ball 12.5 - with TPV non-slip base

Code	Art.	D	H	H1	H3	E	s	R	d1 6g	Q	Weight (g)	F1 (kN)
P54260.0001	P54260.INM16X50CIN	60	19.5	32	22	13	7	12.5	M16	50	352	23
P54260.0002	P54260.INM16X70CIN	60	19.5	32	22	13	7	12.5	M16	70	379	23
P54260.0003	P54260.INM16X90CIN	60	19.5	32	22	13	7	12.5	M16	90	405	23
P54260.0004	P54260.INM16X110CIN	60	19.5	32	22	13	7	12.5	M16	110	431	23
P54260.0005	P54260.INM16X130CIN	60	19.5	32	22	13	7	12.5	M16	130	457	23
P54260.0006	P54260.INM16X150CIN	60	19.5	32	22	13	7	12.5	M16	150	483	23
P54260.0007	P54260.INM16X170CIN	60	19.5	32	22	13	7	12.5	M16	170	509	23

Attention: The expressed load limit F1 is lower than the break load by 30% and is intended as static.

Customised stud length available for a minimum of 100 pieces.

P543

+135° -30° | AVP | Aisi 303 | SBS | RoHS COMPLIANT

16 FULL STEEL MOUNTING FOOT WITH ARTICULATED STEM TYPE B - BALL 15 AND NON-SLIP BASE

Piedi metallo con stelo snodato + antiscivolo

Materials:

P543:

Turned free-cutting steel mounting foot base.

P543CIN:

Turned stainless steel mounting foot base (Aisi 303).

Surface finish:

Smooth.

Colour:

P543:

Standard blue galvanising.

P543CIN:

Natural.

Inserts:

P543:

Galvanised steel threaded and articulated stem (ball 15) with milled seat for wrench (type B) (thread tolerance 6g).

P543CIN:

Stainless steel threaded and articulated stem (ball 15) with milled seat for wrench (type B) (Aisi 304) (thread tolerance 6g).

Stem fixing method:

The stem cannot be disassembled. The ball cannot be removed as the edge of its seat has been pressed in.

Non-slip base:

Non-slip base in thermoplastic rubber TPV 75 Shore, black RAL 9011.

Resistant to oils and greases. Push-fit assembly.

Special requests:

Upon request and for special quantities inserts can be supplied with customised lengths.

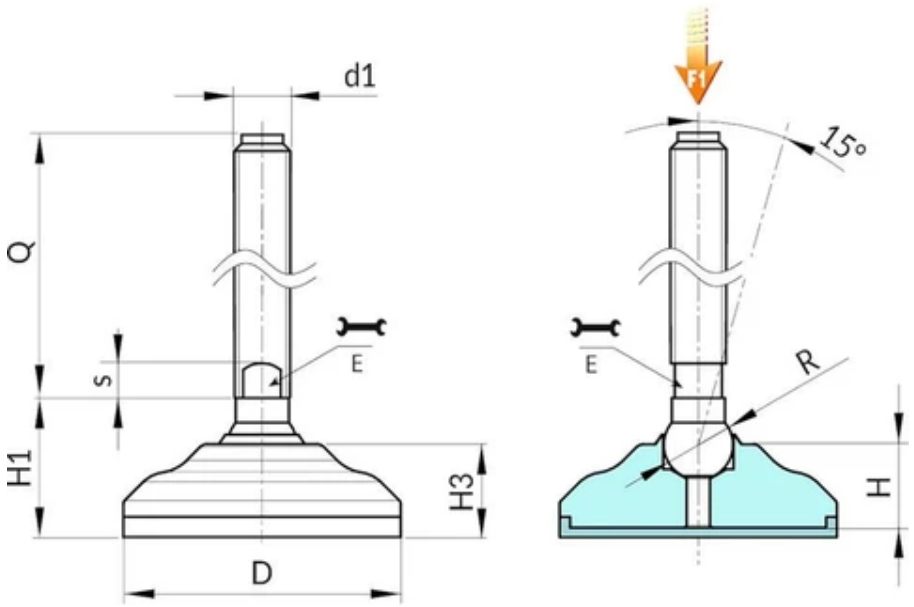

Version P543: Galvanised steel mounting foot with stem type B (with milled seat for wrench) and ball 15 - with TPV non-slip base

Code	Art.	D	H	H1	H3	E	s	R	d1 6g	Q	Weight (g)	F1|(kN)
P54340.0015	P54340.VZM20X90	40	15	26	17.5	16	7	15	M20	90	313	50
P54340.0016	P54340.VZM20X110	40	15	26	17.5	16	7	15	M20	110	345	50
P54340.0017	P54340.VZM20X130	40	15	26	17.5	16	7	15	M20	130	377	50
P54340.0018	P54340.VZM20X150	40	15	26	17.5	16	7	15	M20	150	412	50
P54340.0019	P54340.VZM20X170	40	15	26	17.5	16	7	15	M20	170	444	50
P54340.0020	P54340.VZM20X190	40	15	26	17.5	16	7	15	M20	190	477	50
P54340.0021	P54340.VZM20X210	40	15	26	17.5	16	7	15	M20	210	512	50
P54350.0015	P54350.VZM20X90	50	17.5	29.5	20	16	7	15	M20	90	382	50
P54350.0016	P54350.VZM20X110	50	17.5	29.5	20	16	7	15	M20	110	414	50
P54350.0017	P54350.VZM20X130	50	17.5	29.5	20	16	7	15	M20	130	446	50
P54350.0018	P54350.VZM20X150	50	17.5	29.5	20	16	7	15	M20	150	481	50
P54350.0019	P54350.VZM20X170	50	17.5	29.5	20	16	7	15	M20	170	513	50
P54350.0020	P54350.VZM20X190	50	17.5	29.5	20	16	7	15	M20	190	546	50
P54350.0021	P54350.VZM20X210	50	17.5	29.5	20	16	7	15	M20	210	581	50
P54360.0015	P54360.VZM20X90	60	19.5	32	22	16	7	15	M20	90	487	50
P54360.0016	P54360.VZM20X110	60	19.5	32	22	16	7	15	M20	110	519	50
P54360.0017	P54360.VZM20X130	60	19.5	32	22	16	7	15	M20	130	351	50
P54360.0018	P54360.VZM20X150	60	19.5	32	22	16	7	15	M20	150	586	50
P54360.0019	P54360.VZM20X170	60	19.5	32	22	16	7	15	M20	170	618	50
P54360.0020	P54360.VZM20X190	60	19.5	32	22	16	7	15	M20	190	651	50
P54360.0021	P54360.VZM20X210	60	19.5	32	22	16	7	15	M20	210	686	50

Code	Art.	D	H	H1	H3	E	s	R	d1 6g	Q	Weight (g)	F1|(kN)
P54340.0022	P54340.VZM24X90	40	15	26	17.5	19	7	15	M24	90	437	50
P54340.0023	P54340.VZM24X110	40	15	26	17.5	19	7	15	M24	110	497	50
P54340.0024	P54340.VZM24X130	40	15	26	17.5	19	7	15	M24	130	557	50
P54340.0025	P54340.VZM24X150	40	15	26	17.5	19	7	15	M24	150	617	50
P54340.0026	P54340.VZM24X170	40	15	26	17.5	19	7	15	M24	170	677	50
P54340.0027	P54340.VZM24X190	40	15	26	17.5	19	7	15	M24	190	737	50
P54340.0028	P54340.VZM24X210	40	15	26	17.5	19	7	15	M24	210	797	50
P54350.0022	P54350.VZM24X90	50	17.5	29.5	20	19	7	15	M24	90	506	50
P54350.0023	P54350.VZM24X110	50	17.5	29.5	20	19	7	15	M24	110	566	50
P54350.0024	P54350.VZM24X130	50	17.5	29.5	20	19	7	15	M24	130	626	50
P54350.0025	P54350.VZM24X150	50	17.5	29.5	20	19	7	15	M24	150	686	50
P54350.0026	P54350.VZM24X170	50	17.5	29.5	20	19	7	15	M24	170	746	50
P54350.0027	P54350.VZM24X190	50	17.5	29.5	20	19	7	15	M24	190	806	50
P54350.0028	P54350.VZM24X210	50	17.5	29.5	20	19	7	15	M24	210	866	50
P54360.0022	P54360.VZM24X90	60	19.5	32	22	19	7	15	M24	90	611	50
P54360.0023	P54360.VZM24X110	60	19.5	32	22	19	7	15	M24	110	671	50
P54360.0024	P54360.VZM24X130	60	19.5	32	22	19	7	15	M24	130	731	50
P54360.0025	P54360.VZM24X150	60	19.5	32	22	19	7	15	M24	150	791	50
P54360.0026	P54360.VZM24X170	60	19.5	32	22	19	7	15	M24	170	851	50
P54360.0027	P54360.VZM24X190	60	19.5	32	22	19	7	15	M24	190	911	50
P54360.0028	P54360.VZM24X210	60	19.5	32	22	19	7	15	M24	210	971	50

Customised stud length available for a minimum of 100 pieces.
Attention: The expressed load limit F1 is lower than the break load by 30% and is intended as static.

Version P543CIN: Stainless steel foot with stem type B (with milled seat for wrench) and ball 15 - with TPV non-slip base

Code	Art.	D	H	H1	H3	E	s	R	d1 6g	Q	Weight (g)	F1_(kN)
P54340.0001	P54340.INM20X90CIN	40	15	26	17.5	16	7	15	M20	90	313	50
P54340.0002	P54340.INM20X110CIN	40	15	26	17.5	16	7	15	M20	110	345	50
P54340.0003	P54340.INM20X130CIN	40	15	26	17.5	16	7	15	M20	130	377	50
P54340.0004	P54340.INM20X150CIN	40	15	26	17.5	16	7	15	M20	150	412	50
P54340.0005	P54340.INM20X170CIN	40	15	26	17.5	16	7	15	M20	170	444	50
P54340.0006	P54340.INM20X190CIN	40	15	26	17.5	16	7	15	M20	190	477	50
P54340.0007	P54340.INM20X210CIN	40	15	26	17.5	16	7	15	M20	210	512	50
P54350.0001	P54350.INM20X90CIN	50	17.5	29.5	20	16	7	15	M20	90	382	50
P54350.0002	P54350.INM20X110CIN	50	17.5	29.5	20	16	7	15	M20	110	414	50
P54350.0003	P54350.INM20X130CIN	50	17.5	29.5	20	16	7	15	M20	130	446	50
P54350.0004	P54350.INM20X150CIN	50	17.5	29.5	20	16	7	15	M20	150	481	50
P54350.0005	P54350.INM20X170CIN	50	17.5	29.5	20	16	7	15	M20	170	513	50
P54350.0006	P54350.INM20X190CIN	50	17.5	29.5	20	16	7	15	M20	190	546	50
P54350.0007	P54350.INM20X210CIN	50	17.5	29.5	20	16	7	15	M20	210	581	50

Code	Art.	D	H	H1	H3	E	s	R	d1 6g	Q	Weight (g)	F1_(kN)
P54360.0001	P54360.INM20X90CIN	60	19.5	32	22	16	7	15	M20	90	487	50
P54360.0002	P54360.INM20X110CIN	60	19.5	32	22	16	7	15	M20	110	519	50
P54360.0003	P54360.INM20X130CIN	60	19.5	32	22	16	7	15	M20	130	351	50
P54360.0004	P54360.INM20X150CIN	60	19.5	32	22	16	7	15	M20	150	586	50
P54360.0005	P54360.INM20X170CIN	60	19.5	32	22	16	7	15	M20	170	618	50
P54360.0006	P54360.INM20X190CIN	60	19.5	32	22	16	7	15	M20	190	651	50
P54360.0007	P54360.INM20X210CIN	60	19.5	32	22	16	7	15	M20	210	686	50
P54340.0008	P54340.INM24X90CIN	40	15	26	17.5	19	7	15	M24	90	437	50
P54340.0009	P54340.INM24X110CIN	40	15	26	17.5	19	7	15	M24	110	497	50
P54340.0010	P54340.INM24X130CIN	40	15	26	17.5	19	7	15	M24	130	557	50
P54340.0011	P54340.INM24X150CIN	40	15	26	17.5	19	7	15	M24	150	617	50
P54340.0012	P54340.INM24X170CIN	40	15	26	17.5	19	7	15	M24	170	677	50
P54340.0013	P54340.INM24X190CIN	40	15	26	17.5	19	7	15	M24	190	737	50
P54340.0014	P54340.INM24X210CIN	40	15	26	17.5	19	7	15	M24	210	797	50
P54350.0008	P54350.INM24X90CIN	50	17.5	29.5	20	19	7	15	M24	90	506	50
P54350.0009	P54350.INM24X110CIN	50	17.5	29.5	20	19	7	15	M24	110	566	50
P54350.0010	P54350.INM24X130CIN	50	17.5	29.5	20	19	7	15	M24	130	626	50
P54350.0011	P54350.INM24X150CIN	50	17.5	29.5	20	19	7	15	M24	150	686	50
P54350.0012	P54350.INM24X170CIN	50	17.5	29.5	20	19	7	15	M24	170	746	50
P54350.0013	P54350.INM24X190CIN	50	17.5	29.5	20	19	7	15	M24	190	806	50
P54350.0014	P54350.INM24X210CIN	50	17.5	29.5	20	19	7	15	M24	210	866	50
P54360.0008	P54360.INM24X90CIN	60	19.5	32	22	19	7	15	M24	90	611	50
P54360.0009	P54360.INM24X110CIN	60	19.5	32	22	19	7	15	M24	110	671	50
P54360.0010	P54360.INM24X130CIN	60	19.5	32	22	19	7	15	M24	130	731	50
P54360.0011	P54360.INM24X150CIN	60	19.5	32	22	19	7	15	M24	150	791	50
P54360.0012	P54360.INM24X170CIN	60	19.5	32	22	19	7	15	M24	170	851	50
P54360.0013	P54360.INM24X190CIN	60	19.5	32	22	19	7	15	M24	190	911	50
P54360.0014	P54360.INM24X210CIN	60	19.5	32	22	19	7	15	M24	210	971	50

Attention: The expressed load limit F1 is lower than the break load by 30% and is intended as static.
Customised stud length available for a minimum of 100 pieces.

P544

+135° -30° | AVP | Aisi 303 | SBS | RoHS COMPLIANT

16

FULL STEEL MOUNTING FOOT WITH ARTICULATED STEM TYPE A - BALL 24 AND NON-SLIP BASE

Piedi metallo con stelo snodato + antiscivolo

Materials:

P544:

Turned free-cutting steel mounting foot base.

P544CIN:

Turned stainless steel mounting foot base (Aisi 303).

Surface finish:

Smooth.

Colour:

P544:

Standard blue galvanising.

P544CIN:

Natural.

Inserts:

P544:

Galvanised steel threaded and articulated stem (ball 24) with hexagonal base (thread tolerance 6g).

P544CIN:

Stainless steel threaded and articulated stem (ball 24) with hexagonal base (Aisi 303) (thread tolerance 6g).

Stem fixing method:

The stem cannot be disassembled. The ball cannot be removed as the edge of its seat has been pressed in.

Non-slip base:

Non-slip base in thermoplastic rubber TPV 75 Shore, black RAL 9011.

Resistant to oils and greases. Push-fit assembly.

Special requests:

Upon request and for special quantities inserts can be supplied with customised lengths.

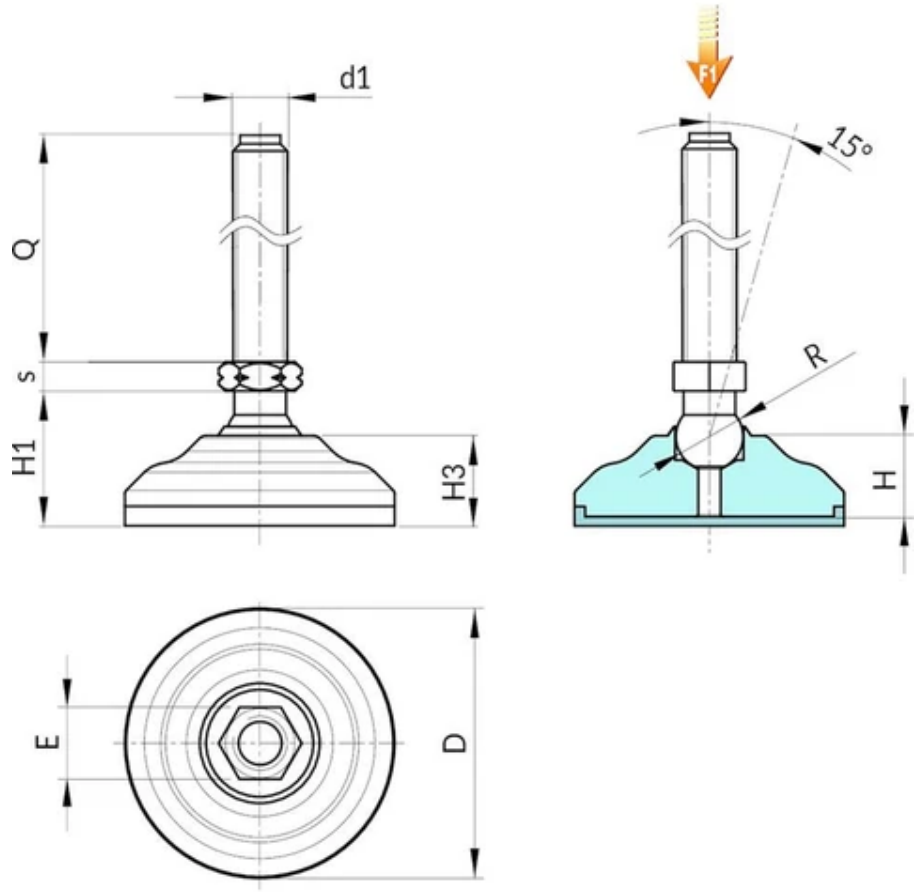

Version P544: Galvanised steel mounting foot with stem type A (with hexagonal base) and ball 24-with TPV non-slip base

Code	Art.	D	H	H1	H3	E	s	R	d1 6g	Q	Weight (g)	F1|(kN)
P54460.0011	P54460.VZM16X090	60	20	32	22,5	24	10	24	M16	90	-	60
P54460.0012	P54460.VZM16X110	60	20	32	22,5	24	10	24	M16	110	-	60
P54460.0013	P54460.VZM16X130	60	20	32	22,5	24	10	24	M16	130	-	60
P54460.0014	P54460.VZM16X150	60	20	32	22,5	24	10	24	M16	150	-	60
P54460.0015	P54460.VZM16X170	60	20	32	22,5	24	10	24	M16	170	-	60
P54460.0016	P54460.VZM20X090	60	20	32	22,5	24	10	24	M20	90	-	90
P54460.0017	P54460.VZM20X110	60	20	32	22,5	24	10	24	M20	110	-	90
P54460.0018	P54460.VZM20X130	60	20	32	22,5	24	10	24	M20	130	-	90
P54460.0019	P54460.VZM20X150	60	20	32	22,5	24	10	24	M20	150	-	90
P54460.0020	P54460.VZM20X170	60	20	32	22,5	24	10	24	M20	170	-	90

Attention: The expressed load limit F1 is lower than the break load by 30% and is intended as static.
Customised stud length available for a minimum of 100 pieces.

Version P544CIN: Stainless steel mounting foot with stem type A (with hexagonal base) and ball 24-with TPV non-slip base

Code	Art.	D	H	H1	H3	E	s	R	d1 6g	Q	Weight (g)	F1_(kN)
P54460.0001	P54460.INM16X090CIN	60	20	32	22,5	24	10	24	M16	90	-	60
P54460.0002	P54460.INM16X110CIN	60	20	32	22,5	24	10	24	M16	110	-	60
P54460.0003	P54460.INM16X130CIN	60	20	32	22,5	24	10	24	M16	130	-	60
P54460.0004	P54460.INM16X150CIN	60	20	32	22,5	24	10	24	M16	150	-	60
P54460.0005	P54460.INM16X170CIN	60	20	32	22,5	24	10	24	M16	170	-	60

Code	Art.	D	H	H1	H3	E	s	R	d1 6g	Q	Weight (g)	F1_(kN)
P54460.0006	P54460.INM20X090CIN	60	20	32	22,5	24	10	24	M20	90	-	60
P54460.0007	P54460.INM20X110CIN	60	20	32	22,5	24	10	24	M20	110	-	60
P54460.0008	P54460.INM20X130CIN	60	20	32	22,5	24	10	24	M20	130	-	60
P54460.0009	P54460.INM20X150CIN	60	20	32	22,5	24	10	24	M20	150	-	60
P54460.0010	P54460.INM20X170CIN	60	20	32	22,5	24	10	24	M20	170	-	60

Attention: The expressed load limit F1 is lower than the break load by 30% and is intended as static.
Customised stud length available for a minimum of 100 pieces.

P700

+135° -30° | PA6 +G.F. | RoHS COMPLIANT

16 TEARDROP MOUNTING FOOT WITH GROUND FIXING AND STEEL ARTICULATED STEM TYPE A - BALL 12.4

Piedi plastica con fissaggio laterale-stelo snodato

Materials:

Reinforced polyamide.

Resistant to oils and greases.

Surface finish:

Satin.

Colour:

Black (RAL 9011).

Inserts:

P700:

Galvanised steel threaded and articulated stem (ball 12.4) with hexagonal base (thread tolerance 6g).

P700CIN:

Stainless steel threaded and articulated stem (ball 12.4) with hexagonal base (Aisi 303) (thread tolerance 6g).

Ground fixing:

Through hole obtained by moulding the plastic.

Special requests:

Upon request and for special quantities inserts can be supplied with customised lengths.

Upon request and for special quantities the foot can be supplied in Orange (RAL 2004).

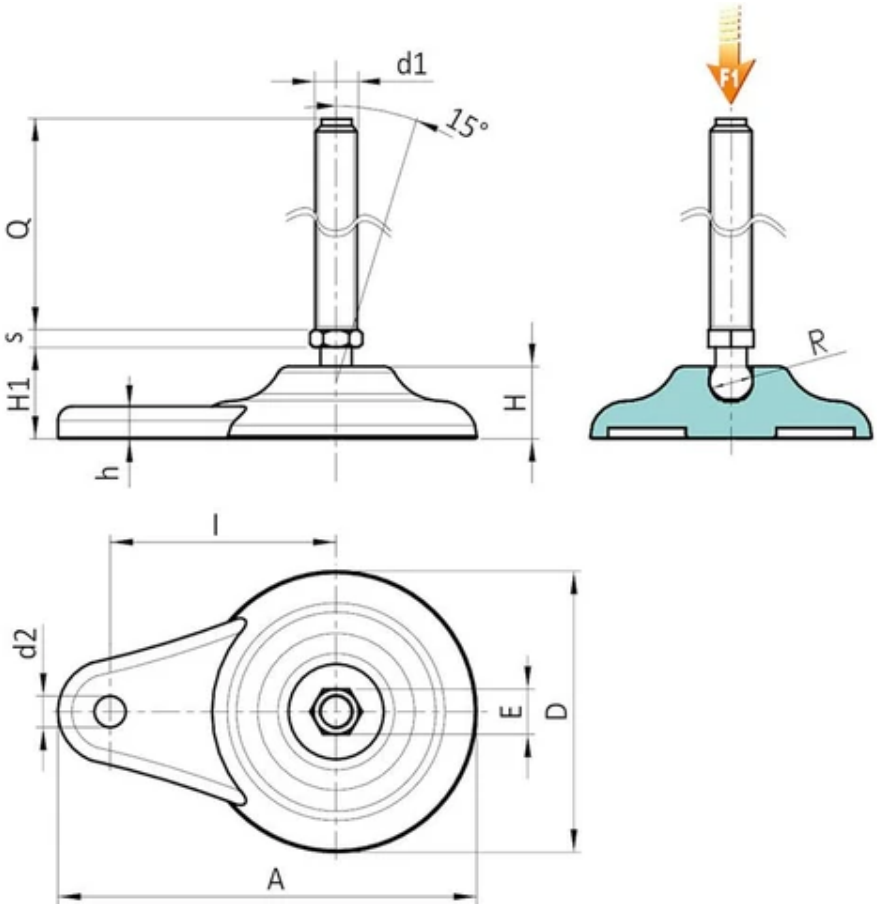

Version P700: Teardrop mounting foot with ground fixing - stem type A (with hexagonal base) and ball 12.5

Code	Art.	D	H	l	H1	h	A	E	s	d2	R	d1	Q	Weight (g)	F1 (kN)
P700080.0014	P700080.TM08X4501	80	20	65	26	9	120	13	5	9	12.5	M8	45	58	10
P700080.0001	P700080.TM08X07001	80	20	65	26	9	120	13	5	9	12.5	M8	70	65	10
P700080.0002	P700080.TM10X04501	80	20	65	26	9	120	13	5	9	12.5	M10	45	83	10
P700080.0004	P700080.TM10X07001	80	20	65	26	9	120	13	5	9	12.5	M10	70	95	10
P700080.0006	P700080.TM10X10001	80	20	65	26	9	120	13	5	9	12.5	M10	100	132	10
P700080.0008	P700080.TM12X04501	80	20	65	26	9	120	13	5	9	12.5	M12	45	93	10
P700080.0010	P700080.TM12X07001	80	20	65	26	9	120	13	5	9	12.5	M12	70	110	10
P700080.0012	P700080.TM12X10001	80	20	65	26	9	120	13	5	9	12.5	M12	100	154	10

Attention: The expressed load limit F1 is lower than the break load by 30% and is intended as static.
Customised stud length available for a minimum of 100 pieces.

Version P700CIN: Teardrop mounting foot with ground fixing - stem type A - stainless steel - (with hexagonal base) and ball 12.5

Code	Art.	D	H	l	H1	h	A	E	s	d2	R	d1	Q	Weight (g)	F1 (kN)
P700080.0031	P700080.TM08X4501CIN	80	20	65	26	9	120	13	5	9	12.5	M8	45	58	10
-	P700080.TM08X07001CIN	80	20	65	26	9	120	13	5	9	12.5	M8	70	65	10
P700080.0003	P700080.TM10X04501CIN	80	20	65	26	9	120	13	5	9	12.5	M10	45	83	10
P700080.0005	P700080.TM10X07001CIN	80	20	65	26	9	120	13	5	9	12.5	M10	70	95	10
P700080.0007	P700080.TM10X10001CIN	80	20	65	26	9	120	13	5	9	12.5	M10	100	132	10
P700080.0009	P700080.TM12X04501CIN	80	20	65	26	9	120	13	5	9	12.5	M12	45	93	10
P700080.0011	P700080.TM12X07001CIN	80	20	65	26	9	120	13	5	9	12.5	M12	70	110	10

Code	Art.	D	H	l	H1	h	A	E	s	d2	R	d1	Q	Weight (g)	F1 (kN)
P700080.0013	P700080.TM12X10001CIN	80	20	65	26	9	120	13	5	9	12.5	M12	100	154	10

Attention: The expressed load limit F1 is lower than the break load by 30% and is intended as static.
Customised stud length available for a minimum of 100 pieces.

P700ESD

+135° -30° | PA6 +G.F. | RoHS COMPLIANT

16 TEARDROP MOUNTING FOOT WITH GROUND FIXING - IN ESD MATERIAL - WITH STEEL ARTICULATED STEM TYPE A - BALL 12.4

Piedi in plastica - stelo snodato

Notes: This item is made from ESD-C (Electro Static Discharge – Conductive) material with fillers in compliance with standards EN IEC 61340-5-1. The product is conductive and prevents the formation of electrostatic discharges by facilitating its grounding. A yellow pad-printed symbol (ESD-C) enables correct identification of the product. Product suitable for the production of electronic material and for use in explosive atmospheres.

Materials:

Reinforced polyamide, with conductive fillers (ESD-C).

Resistant to oils and greases.

Surface finish:

Satin.

Colour:

Black (RAL 9011).

Inserts:

P700ESD:

Galvanised steel threaded and articulated stem (ball 12.4) with hexagonal base (thread tolerance 6g).

P700CINESD:

Stainless steel threaded and articulated stem (ball 12.4) with hexagonal base (Aisi 303) (thread tolerance 6g).

Special requests:

Upon request and for special quantities inserts can be supplied with customised lengths.

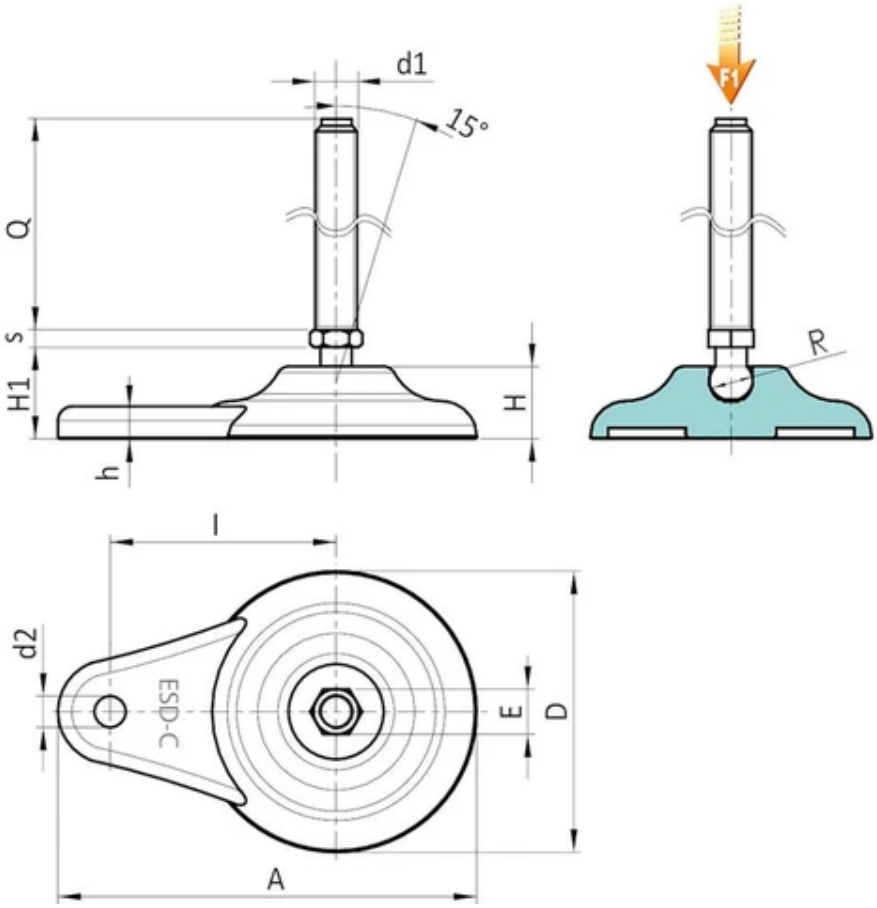

Version P700ESD: Mounting foot with stem type A (with hexagonal base) and ball 12.4

Code	Art.	D	H	l	H1	h	A	E	s	d2	R	d1 6g	Q	Weight (g)	F1 (kN)
P700080.0015	P700080.TM08X4501ESD	80	20	65	26	9	120	13	5	9	12.5	M8	45	58	10
P700080.0016	P700080.TM08X7001ESD	80	20	65	26	9	120	13	5	9	12.5	M8	70	65	10
P700080.0017	P700080.TM10X4501ESD	80	20	65	26	9	120	13	5	9	12.5	M10	45	83	10
P700080.0018	P700080.TM10X7001ESD	80	20	65	26	9	120	13	5	9	12.5	M10	70	95	10
P700080.0019	P700080.TM10X10001ESD	80	20	65	26	9	120	13	5	9	12.5	M10	100	132	10
P700080.0020	P700080.TM12X4501ESD	80	20	65	26	9	120	13	5	9	12.5	M12	45	93	10
P700080.0021	P700080.TM12X7001ESD	80	20	65	26	9	120	13	5	9	12.5	M12	70	110	10
P700080.0022	P700080.TM12X10001ESD	80	20	65	26	9	120	13	5	9	12.5	M12	100	154	10

Attention: The expressed load limit F1 is lower than the break load by 30% and is intended as static.
Customised stud length available for a minimum of 100 pieces.

Version P700CINESD: Mounting foot with stem type A (with hexagonal base) and ball 12.4 - stainless steel

Code	Art.	D	H	l	H1	h	A	E	s	d2	R	d1 6g	Q	Weight (g)	F1 (kN)
P700080.0023	P700080.TM08X4501CINESD	80	20	65	26	9	120	13	5	9	12.5	M8	45	58	10
P700080.0024	P700080.TM08X7001CINESD	80	20	65	26	9	120	13	5	9	12.5	M8	70	65	10
P700080.0025	P700080.TM10X4501CINESD	80	20	65	26	9	120	13	5	9	12.5	M10	45	83	10
P700080.0026	P700080.TM10X7001CINESD	80	20	65	26	9	120	13	5	9	12.5	M10	70	95	10
P700080.0027	P700080.TM10X10001CINESD	80	20	65	26	9	120	13	5	9	12.5	M10	100	132	10
P700080.0028	P700080.TM12X4501CINESD	80	20	65	26	9	120	13	5	9	12.5	M12	45	93	10
P700080.0029	P700080.TM12X7001CINESD	80	20	65	26	9	120	13	5	9	12.5	M12	70	110	10

Code	Art.	D	H	l	H1	h	A	E	s	d2	R	d1 6g	Q	Weight (g)	F1 (kN)
P700080.0030	P700080.TM12X10001CINESD	80	20	65	26	9	120	13	5	9	12.5	M12	100	154	10

Attention: The expressed load limit F1 is lower than the break load by 30% and is intended as static.
Customised stud length available for a minimum of 100 pieces.

P701

+135° -30° | PA6 +G.F. | SBS | RoHS COMPLIANT

16 TEARDROP MOUNTING FOOT WITH GROUND FIXING AND STEEL ARTICULATED STEM TYPE A - BALL 12.5 AND NON-SLIP BASE

Piedi plastica con fissaggio laterale-stelo snodato+antiscivolo

Materials:

Reinforced polyamide.

Resistant to oils and greases.

Surface finish:

Satin.

Colour:

Black (RAL 9011).

Inserts:

P701:

Galvanised steel threaded and articulated stem (ball 12.5) with hexagonal base (thread tolerance 6g).

P701CIN:

Stainless steel threaded and articulated stem (ball 12.5) with hexagonal base (Aisi 303) (thread tolerance 6g).

Non-slip base:

Non-slip base in thermoplastic rubber SBS 75 Shore, black RAL 9011. Resistant to oils and greases. Push-fit assembly.

Ground fixing:

Through hole obtained by moulding the plastic.

Special requests:

Upon request and for special quantities inserts can be supplied with customised lengths.

Upon request and for special quantities the foot can be supplied in Orange (RAL 2004).

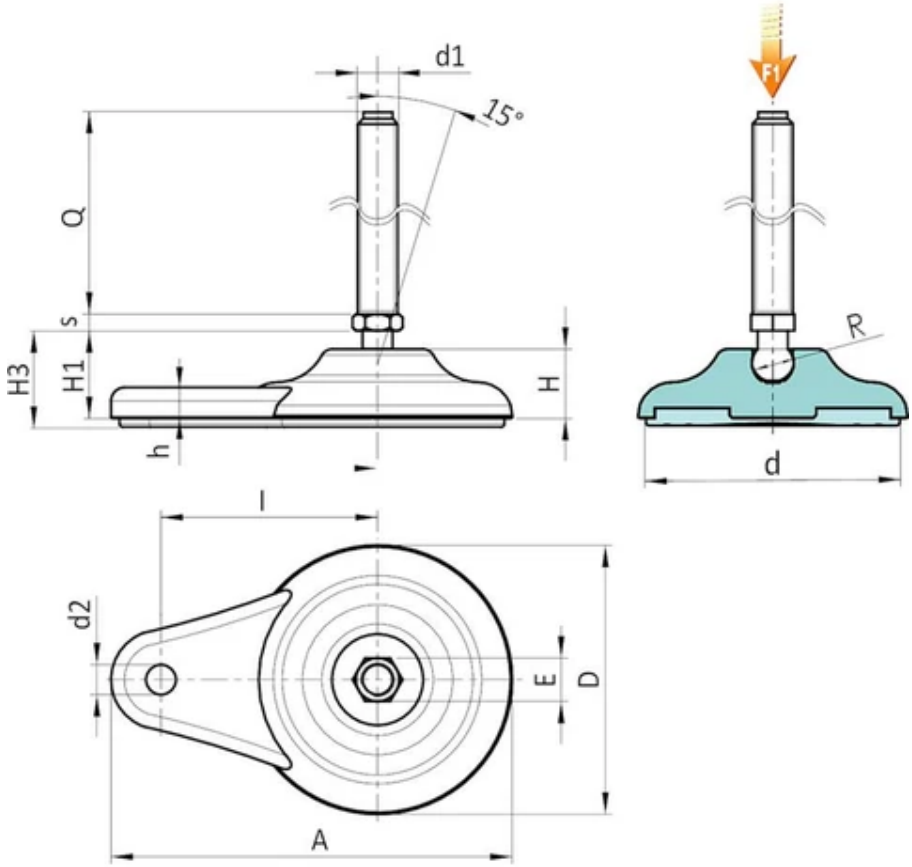

Version P701: Teardrop mounting foot with ground fixing - stem type A (with hexagonal base) and ball 12.5 - with SBS non-slip base

Code	Art.	D	H	I	H1	H3	h	A	E	s	d2	d	R	d1 6g	Q	Weight (g)	F1 (kN)
P701080.0015	P701080.TM08X4501	80	20	65	26	29	9	120	13	5	9	70	12.5	M8	45	72	10
P701080.0016	P701080.TM08X7001	80	20	65	26	29	9	120	13	5	9	70	12.5	M8	70	79	10
P701080.0001	P701080.TM10X4501	80	20	65	26	29	9	120	13	5	9	70	12.5	M10	45	97	10
P701080.0003	P701080.TM10X7001	80	20	65	26	29	9	120	13	5	9	70	12.5	M10	70	109	10
P701080.0005	P701080.TM10X10001	80	20	65	26	29	9	120	13	5	9	70	12.5	M10	100	146	10
P701080.0007	P701080.TM12X4501	80	20	65	26	29	9	120	13	5	9	70	12.5	M12	45	107	10
P701080.0009	P701080.TM12X7001	80	20	65	26	29	9	120	13	5	9	70	12.5	M12	70	124	10
P701080.0012	P701080.TM12X10001	80	20	65	26	29	9	120	13	5	9	70	12.5	M12	100	168	10

Version P701CIN: Teardrop mounting foot with ground fixing - stem type A - stainless steel - (with hexagonal base) and ball 12.5 - with SBS non-slip base

Code	Art.	D	H	I	H1	H3	h	A	E	s	d2	d	R	d1 6g	Q	Weight (g)	F1 (kN)
P701080.0017	P701080.TM08X4501CIN	80	20	65	26	29	9	120	13	5	9	70	12.5	M8	45	72	10
P701080.0018	P701080.TM08X7001CIN	80	20	65	26	29	9	120	13	5	9	70	12.5	M8	70	79	10
P701080.0002	P701080.TM10X4501CIN	80	20	65	26	29	9	120	13	5	9	70	12.5	M10	45	97	10
P701080.0004	P701080.TM10X7001CIN	80	20	65	26	29	9	120	13	5	9	70	12.5	M10	70	109	10
P701080.0008	P701080.TM12X4501CIN	80	20	65	26	29	9	120	13	5	9	70	12.5	M12	45	107	10
P701080.0010	P701080.TM12X7001CIN	80	20	65	26	29	9	120	13	5	9	70	12.5	M12	70	124	10
P701080.0013	P701080.TM12X10001CIN	80	20	65	26	29	9	120	13	5	9	70	12.5	M12	100	168	10

Attention: The expressed load limit F1 is lower than the break load by 30% and is intended as static.

Customised stud length available for a minimum of 100 pieces.

P702

+135°
-30°

PA6
+G.F.

RoHS✓
COMPLIANT

16

TEARDROP MOUNTING FOOT WITH GROUND FIXING AND STEEL ARTICULATED STEM TYPE A - BALL 15

Piedi plastica con fissaggio laterale-stelo snodato

Materials:

Reinforced polyamide.

Resistant to oils and greases.

Surface finish:

Satin.

Colour:

Black (RAL 9011).

Inserts:

P702:

Galvanised steel threaded and articulated stem (ball 15) with hexagonal base (thread tolerance 6g).

P702CIN:

Stainless steel threaded and articulated stem (ball 15) with hexagonal base (Aisi 303) (thread tolerance 6g).

Ground fixing:

Through hole obtained by moulding the plastic.

Special requests:

Upon request and for special quantities inserts can be supplied with customised lengths.

Upon request and for special quantities the foot can be supplied in Orange (RAL 2004).

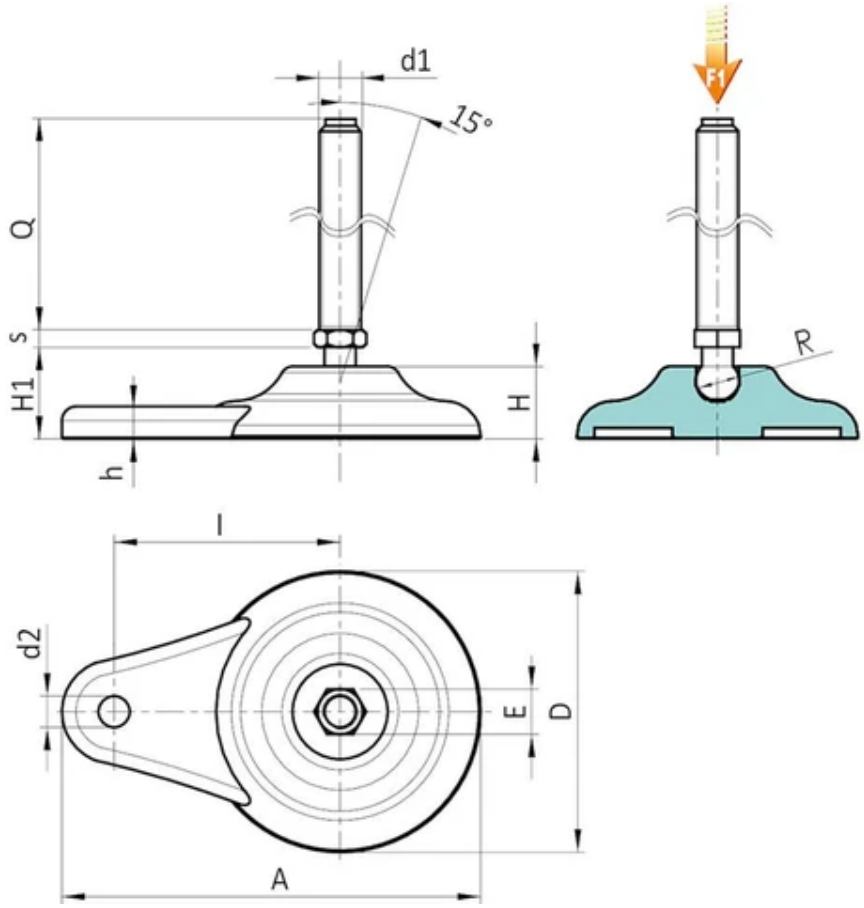

Version P702: Teardrop mounting foot with ground fixing - stem type A (with hexagonal base) and ball 15

Code	Art.	D	H	l	H1	h	A	E	s	d2	R	d1 6g	Q	Weight (g)	F1 (kN)
P702080.0001	P702080.TM12X5001	80	20	65	26	9	120	16	6.5	9	15	M12	50	120	13
P702080.0002	P702080.TM12X7001	80	20	65	26	9	120	16	6.5	9	15	M12	70	133	13
P702080.0004	P702080.TM12X9001	80	20	65	26	9	120	16	6.5	9	15	M12	90	148	13
P702080.0006	P702080.TM12X11001	80	20	65	26	9	120	16	6.5	9	15	M12	110	164	13
P702080.0008	P702080.TM14X5001	80	20	65	26	9	120	16	6.5	9	15	M14	50	132	13
P702080.0009	P702080.TM14X7001	80	20	65	26	9	120	16	6.5	9	15	M14	70	152	13
P702080.0010	P702080.TM14X9001	80	20	65	26	9	120	16	6.5	9	15	M14	90	173	13
P702080.0012	P702080.TM14X11001	80	20	65	26	9	120	16	6.5	9	15	M14	110	190	13
P702080.0015	P702080.TM14X15001	80	20	65	26	9	120	16	6.5	9	15	M14	150	224	13
P702080.0016	P702080.TM16X5001	80	20	65	26	9	120	16	6.5	9	15	M16	50	148	13
P702080.0019	P702080.TM16X7001	80	20	65	26	9	120	16	6.5	9	15	M16	70	174	13
P702080.0021	P702080.TM16X9001	80	20	65	26	9	120	16	6.5	9	15	M16	90	200	13
P702080.0024	P702080.TM16X11001	80	20	65	26	9	120	16	6.5	9	15	M16	110	225	13
P702080.0026	P702080.TM16X13001	80	20	65	26	9	120	16	6.5	9	15	M16	130	251	13
P702080.0028	P702080.TM16X15001	80	20	65	26	9	120	16	6.5	9	15	M16	150	276	13
P702080.0030	P702080.TM16X17001	80	20	65	26	9	120	16	6.5	9	15	M16	170	304	13
P702080.0032	P702080.TM16X19001	80	20	65	26	9	120	16	6.5	9	15	M16	190	327	13

Attention: The expressed load limit F1 is lower than the break load by 30% and is intended as static.
Customised stud length available for a minimum of 100 pieces.

Version P702CIN: Teardrop mounting foot with ground fixing - stem type A - stainless steel - (with hexagonal base) and ball 15

Code	Art.	D	H	I	H1	h	A	E	s	d2	R	d1 6g	Q	Weight (g)	F1 (kN)
P702080.0003	P702080.TM12X7001CIN	80	20	65	26	9	120	16	6.5	9	15	M12	70	133	13
P702080.0005	P702080.TM12X9001CIN	80	20	65	26	9	120	16	6.5	9	15	M12	90	148	13
P702080.0007	P702080.TM12X11001CIN	80	20	65	26	9	120	16	6.5	9	15	M12	110	164	13
P702080.0010	P702080.TM14X7001CIN	80	20	65	26	9	120	16	6.5	9	15	M14	70	152	13
P702080.0013	P702080.TM14X11001CIN	80	20	65	26	9	120	16	6.5	9	15	M14	110	190	13
P702080.0014	P702080.TM14X13001CIN	80	20	65	26	9	120	16	6.5	9	15	M14	130	207	13
P702080.0018	P702080.TM16X5001CIN	80	20	65	26	9	120	16	6.5	9	15	M16	50	148	13
P702080.0020	P702080.TM16X7001CIN	80	20	65	26	9	120	16	6.5	9	15	M16	70	174	13
P702080.0022	P702080.TM16X9001CIN	80	20	65	26	9	120	16	6.5	9	15	M16	90	200	13
P702080.0025	P702080.TM16X11001CIN	80	20	65	26	9	120	16	6.5	9	15	M16	110	225	13
P702080.0027	P702080.TM16X13001CIN	80	20	65	26	9	120	16	6.5	9	15	M16	130	251	13
P702080.0029	P702080.TM16X15001CIN	80	20	65	26	9	120	16	6.5	9	15	M16	150	276	13
P702080.0031	P702080.TM16X17001CIN	80	20	65	26	9	120	16	6.5	9	15	M16	170	304	13
P702080.0033	P702080.TM16X19001CIN	80	20	65	26	9	120	16	6.5	9	15	M16	190	327	13

Attention: The expressed load limit F1 is lower than the break load by 30% and is intended as static.
Customised stud length available for a minimum of 100 pieces.

P703

+135° -30° | PA6 +G.F. | SBS | RoHS COMPLIANT

16 TEARDROP MOUNTING FOOT WITH GROUND FIXING AND STEEL ARTICULATED STEM TYPE A - BALL 15 AND NON-SLIP BASE

Piedi plastica con fissaggio laterale-stelo snodato+antiscivolo

Materials:

Reinforced polyamide.

Resistant to oils and greases.

Surface finish:

Satin.

Colour:

Black (RAL 9011).

Inserts:

P703:

Galvanised steel threaded and articulated stem (ball 15) with hexagonal base (thread tolerance 6g).

P703CIN:

Stainless steel threaded and articulated stem (ball 15) with hexagonal base (Aisi 303) (thread tolerance 6g).

Non-slip base:

Non-slip base in thermoplastic rubber SBS 75 Shore, black RAL 9011. Resistant to oils and greases. Push-fit assembly.

Ground fixing:

Through hole obtained by moulding the plastic.

Special requests:

Upon request and for special quantities inserts can be supplied with customised lengths.

Upon request and for special quantities the foot can be supplied in Orange (RAL 2004).

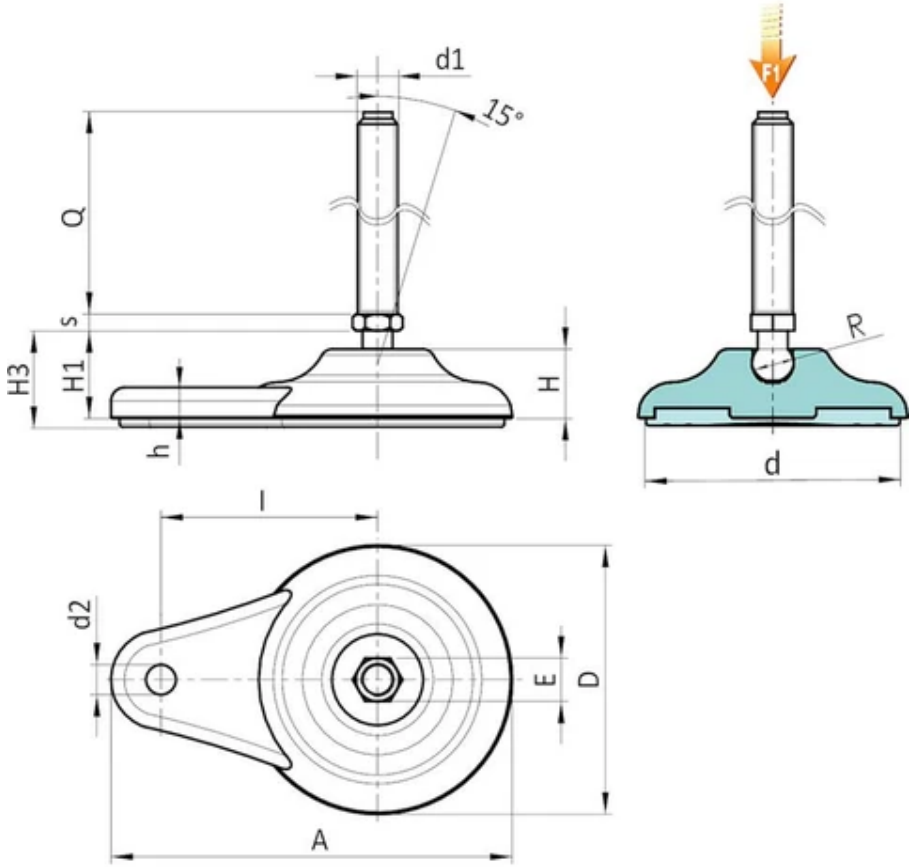

Version P703: Teardrop mounting foot with ground fixing - stem type A (with hexagonal base) and ball 15 - with SBS non-slip base

Code	Art.	D	H	l	H1	H3	h	A	E	s	d2	d	R	d1 6g	Q	Weight (g)	F1 (kN)
P703080.0001	P703080.TM12X5001	80	20	65	26	29	9	120	16	6.5	9	70	15	M12	50	143	13
P703080.0002	P703080.TM12X7001	80	20	65	26	29	9	120	16	6.5	9	70	15	M12	70	156	13
P703080.0004	P703080.TM12X9001	80	20	65	26	29	9	120	16	6.5	9	70	15	M12	90	171	13
P703080.0006	P703080.TM12X11001	80	20	65	26	29	9	120	16	6.5	9	70	15	M12	110	187	13
P703080.0009	P703080.TM14X5001	80	20	65	26	29	9	120	16	6.5	9	70	15	M14	50	155	13
P703080.0010	P703080.TM14X7001	80	20	65	26	29	9	120	16	6.5	9	70	15	M14	70	185	13
P703080.0012	P703080.TM14X9001	80	20	65	26	29	9	120	16	6.5	9	70	15	M14	90	196	13
P703080.0013	P703080.TM14X11001	80	20	65	26	29	9	120	16	6.5	9	70	15	M14	110	213	13
P703080.0016	P703080.TM14X15001	80	20	65	26	29	9	120	16	6.5	9	70	15	M14	150	230	13
P703080.0017	P703080.TM16X5001	80	20	65	26	29	9	120	16	6.5	9	70	15	M16	50	171	13
P703080.0032	P703080.TM16X7001	80	20	65	26	29	9	120	16	6.5	9	70	15	M16	70	197	13
P703080.0020	P703080.TM16X9001	80	20	65	26	29	9	120	16	6.5	9	70	15	M16	90	223	13
P703080.0022	P703080.TM16X11001	80	20	65	26	29	9	120	16	6.5	9	70	15	M16	110	248	13
P703080.0024	P703080.TM16X13001	80	20	65	26	29	9	120	16	6.5	9	70	15	M16	130	274	13
P703080.0026	P703080.TM16X15001	80	20	65	26	29	9	120	16	6.5	9	70	15	M16	150	299	13
P703080.0028	P703080.TM16X17001	80	20	65	26	29	9	120	16	6.5	9	70	15	M16	170	327	13
P703080.0030	P703080.TM16X19001	80	20	65	26	29	9	120	16	6.5	9	70	15	M16	190	350	13

Attention: The expressed load limit F1 is lower than the break load by 30% and is intended as static.
Customised stud length available for a minimum of 100 pieces.

Version P703CIN: Teardrop mounting foot with ground fixing - stem type A - stainless steel - (with hexagonal base) and ball 15 - with SBS non-slip base

Code	Art.	D	H	I	H1	H3	h	A	E	s	d2	d	R	d1 6g	Q	Weight (g)	F1 (kN)
P703080.0003	P703080.TM12X7001CIN	80	20	65	26	29	9	120	16	6.5	9	70	15	M12	70	156	13
P703080.0005	P703080.TM12X9001CIN	80	20	65	26	29	9	120	16	6.5	9	70	15	M12	90	171	13
P703080.0007	P703080.TM12X11001CIN	80	20	65	26	29	9	120	16	6.5	9	70	15	M12	110	187	13
P703080.0011	P703080.TM14X7001CIN	80	20	65	26	29	9	120	16	6.5	9	70	15	M14	70	185	13
P703080.0014	P703080.TM14X11001CIN	80	20	65	26	29	9	120	16	6.5	9	70	15	M14	110	213	13
P703080.0015	P703080.TM14X13001CIN	80	20	65	26	29	9	120	16	6.5	9	70	15	M14	130	230	13
P703080.0018	P703080.TM16X5001CIN	80	20	65	26	29	9	120	16	6.5	9	70	15	M16	50	171	13
P703080.0019	P703080.TM16X7001CIN	80	20	65	26	29	9	120	16	6.5	9	70	15	M16	70	197	13
P703080.0021	P703080.TM16X9001CIN	80	20	65	26	29	9	120	16	6.5	9	70	15	M16	90	223	13
P703080.0023	P703080.TM16X11001CIN	80	20	65	26	29	9	120	16	6.5	9	70	15	M16	110	248	13
P703080.0025	P703080.TM16X13001CIN	80	20	65	26	29	9	120	16	6.5	9	70	15	M16	130	274	13
P703080.0027	P703080.TM16X15001CIN	80	20	65	26	29	9	120	16	6.5	9	70	15	M16	150	299	13
P703080.0029	P703080.TM16X17001CIN	80	20	65	26	29	9	120	16	6.5	9	70	15	M16	170	327	13
P703080.0031	P703080.TM16X19001CIN	80	20	65	26	29	9	120	16	6.5	9	70	15	M16	190	350	13

Attention: The expressed load limit F1 is lower than the break load by 30% and is intended as static.
Customised stud length available for a minimum of 100 pieces.

P704

+135°
-30°

PA6
+G.F.

RoHS✓
COMPLIANT

16

TEARDROP MOUNTING FOOT WITH GROUND FIXING AND STEEL ARTICULATED STEM TYPE B - BALL 12.4

Piedi plastica con fissaggio laterale-stelo snodato

Materials:

Reinforced polyamide.

Resistant to oils and greases.

Surface finish:

Satin.

Colour:

Black (RAL 9011).

Inserts:

P704:

Galvanised steel threaded and articulated stem (ball 12.5) with milled seat for wrench (type B) (thread tolerance 6g).

P704CIN:

Stainless steel threaded and articulated stem (ball 12.5) with milled seat for wrench (type B) (Aisi 303) (thread tolerance 6g).

Ground fixing:

Through hole obtained by moulding the plastic.

Special requests:

Upon request and for special quantities inserts can be supplied with customised lengths.

Upon request and for special quantities the foot can be supplied in Orange (RAL 2004).

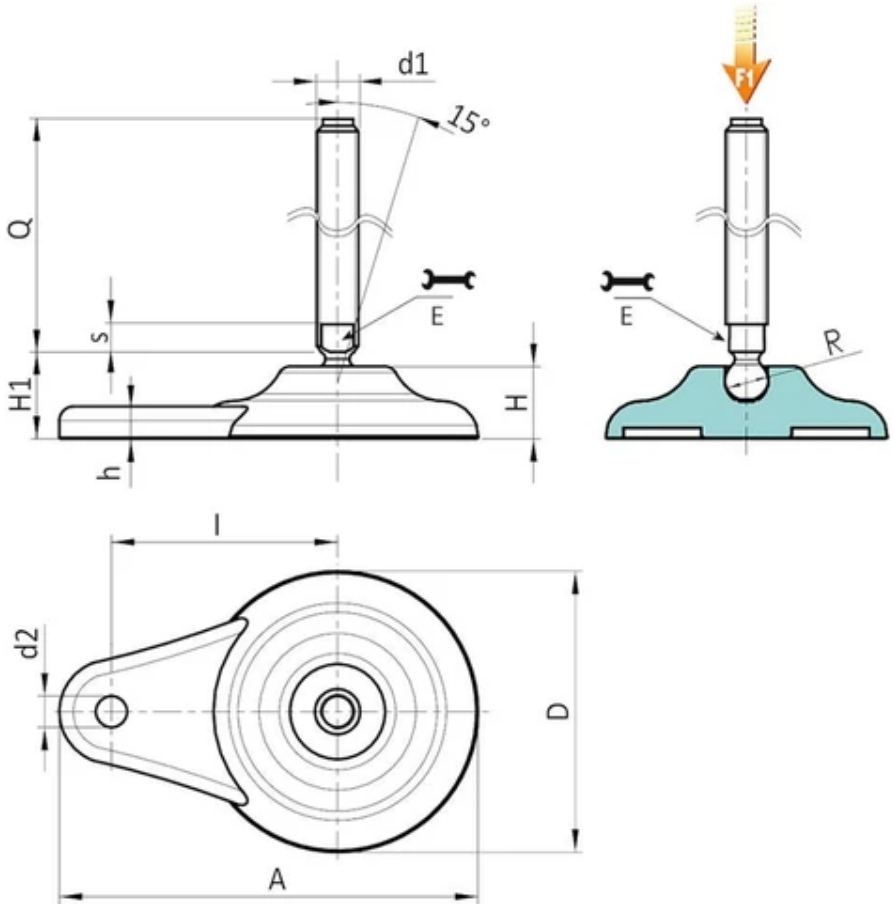

Version P704: Teardrop mounting foot with ground fixing - stem type B (with milled seat for wrench) and ball 12.5

Code	Art.	D	H	l	H1	h	A	E	s	d2	R	d1 6g	Q	Weight (g)	F1 (kN)
P704080.0001	P704080.TM16X7001	80	20	65	26	9	120	13	7	9	12,4	M16	70	156	10
P704080.0002	P704080.TM16X9001	80	20	65	26	9	120	13	7	9	12,4	M16	90	182	10
P704080.0003	P704080.TM16X11001	80	20	65	26	9	120	13	7	9	12,4	M16	110	208	10
P704080.0005	P704080.TM16X13001	80	20	65	26	9	120	13	7	9	12,4	M16	130	234	10
P704080.0007	P704080.TM16X15001	80	20	65	26	9	120	13	7	9	12,4	M16	150	260	10
P704080.0009	P704080.TM16X17001	80	20	65	26	9	120	13	7	9	12,4	M16	170	286	10

Attention: The expressed load limit F1 is lower than the break load by 30% and is intended as static.
Customised stud length available for a minimum of 100 pieces.

Version P704CIN: Teardrop mounting foot with ground fixing - stem type B - stainless steel - (with milled seat for wrench) and ball 12.5

Code	Art.	D	H	l	H1	h	A	E	s	d2	R	d1 6g	Q	Weight (g)	F1 (kN)
P704080.0004	P704080.TM16X11001CIN	80	20	65	26	9	120	13	7	9	12,4	M16	110	130	10
P704080.0006	P704080.TM16X13001CIN	80	20	65	26	9	120	13	7	9	12,4	M16	130	156	10
P704080.0008	P704080.TM16X15001CIN	80	20	65	26	9	120	13	7	9	12,4	M16	150	182	10
P704080.0010	P704080.TM16X17001CIN	80	20	65	26	9	120	13	7	9	12,4	M16	170	208	10

Attention: The expressed load limit F1 is lower than the break load by 30% and is intended as static.
Customised stud length available for a minimum of 100 pieces.

P705

+135° -30° | PA6 +G.F. | SBS | RoHS COMPLIANT

16 TEARDROP MOUNTING FOOT WITH GROUND FIXING AND STEEL ARTICULATED STEM TYPE B - BALL 12.4 AND NON-SLIP BASE

Piedi plastica con fissaggio laterale-stelo snodato+antiscivolo

Materials:

Reinforced polyamide.

Resistant to oils and greases.

Surface finish:

Satin.

Colour:

Black (RAL 9011).

Inserts:

P705:

Galvanised steel threaded and articulated stem (ball 12.5) with milled seat for wrench (type B) (thread tolerance 6g).

P705CIN:

Stainless steel threaded and articulated stem (ball 12.5) with milled seat for wrench (type B) (Aisi 303) (thread tolerance 6g).

Non-slip base:

Non-slip base in thermoplastic rubber SBS 75 Shore, black RAL 9011. Resistant to oils and greases. Push-fit assembly.

Ground fixing:

Through hole obtained by moulding the plastic.

Special requests:

Upon request and for special quantities inserts can be supplied with customised lengths.

Upon request and for special quantities the foot can be supplied in Orange (RAL 2004).

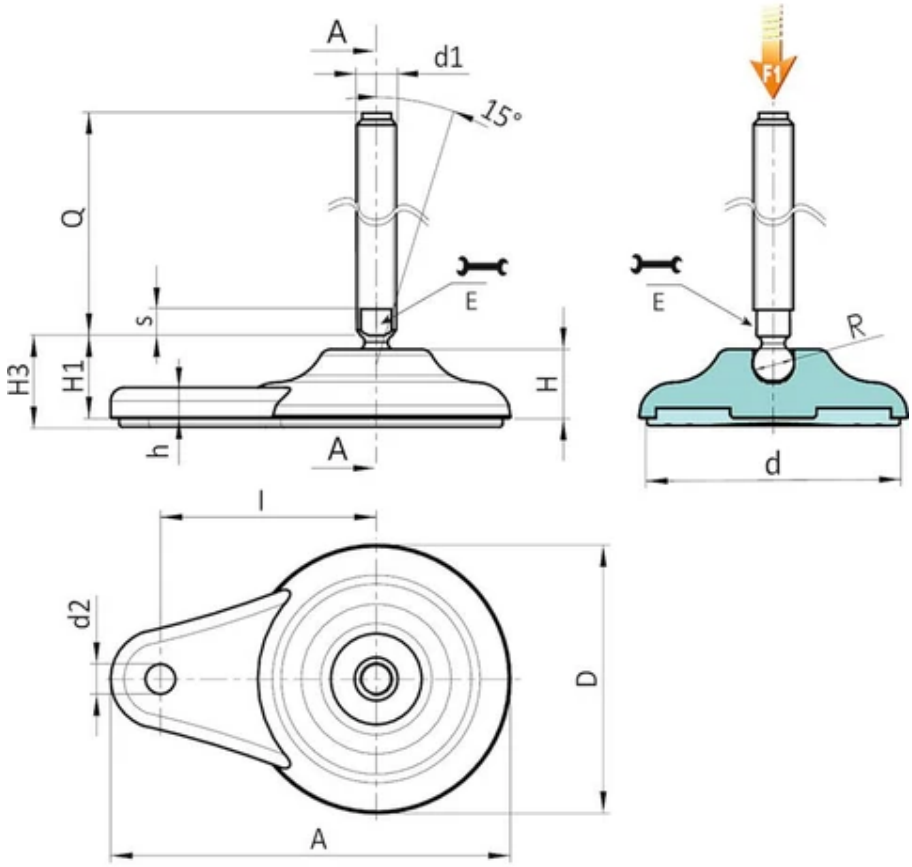

Version P705: Teardrop mounting foot with ground fixing - stem type B (with milled seat for wrench) and ball 12.5 - with SBS non-slip base

Code	Art.	D	H	l	H1	H3	h	A	E	s	d2	d	R	d1 6g	Q	Weight (g)	F1 (kN)
P705080.0001	P705080.TM16X7001	80	20	65	26	29	9	120	13	7	9	70	12.4	M16	70	179	10
P705080.0002	P705080.TM16X9001	80	20	65	26	29	9	120	13	7	9	70	12.4	M16	90	205	10
P705080.0003	P705080.TM16X11001	80	20	65	26	29	9	120	13	7	9	70	12.4	M16	110	231	10
P705080.0005	P705080.TM16X13001	80	20	65	26	29	9	120	13	7	9	70	12.4	M16	130	257	10
P705080.0007	P705080.TM16X15001	80	20	65	26	29	9	120	13	7	9	70	12.4	M16	150	283	10
P705080.0009	P705080.TM16X17001	80	20	65	26	29	9	120	13	7	9	70	12.4	M16	170	309	10

Attention: The expressed load limit F1 is lower than the break load by 30% and is intended as static.
Customised stud length available for a minimum of 100 pieces.

Version P705CIN: Teardrop mounting foot with ground fixing - stem type B - stainless steel - (with milled seat for wrench) and ball 12.5 - with SBS non-slip base

Code	Art.	D	H	l	H1	H3	h	A	E	s	d2	d	R	d1 6g	Q	Weight (g)	F1 (kN)
P705080.0004	P705080.TM16X11001CIN	80	20	65	26	29	9	120	13	7	9	70	12.4	M16	110	231	10
P705080.0006	P705080.TM16X13001CIN	80	20	65	26	29	9	120	13	7	9	70	12.4	M16	130	257	10
P705080.0008	P705080.TM16X15001CIN	80	20	65	26	29	9	120	13	7	9	70	12.4	M16	150	283	10
P705080.0010	P705080.TM16X17001CIN	80	20	65	26	29	9	120	13	7	9	70	12.4	M16	170	309	10

Attention: The expressed load limit F1 is lower than the break load by 30% and is intended as static.
Customised stud length available for a minimum of 100 pieces.

P706

+135° -30° | PA6 +G.F. | RoHS COMPLIANT

16

TEARDROP MOUNTING FOOT WITH GROUND FIXING AND STEEL ARTICULATED STEM TYPE B - BALL 15

Piedi plastica con fissaggio laterale-stelo snodato

Materials:

Reinforced polyamide.

Resistant to oils and greases.

Surface finish:

Satin.

Colour:

Black (RAL 9011).

Inserts:

P706:

Galvanised steel threaded and articulated stem (ball 15) with milled seat for wrench (type B) (thread tolerance 6g).

P706CIN:

Stainless steel threaded and articulated stem (ball 15) with milled seat for wrench (type B) (Aisi 304) (thread tolerance 6g).

Ground fixing:

Through hole obtained by moulding the plastic.

Special requests:

Upon request and for special quantities inserts can be supplied with customised lengths.

Upon request and for special quantities the foot can be supplied in Orange (RAL 2004).

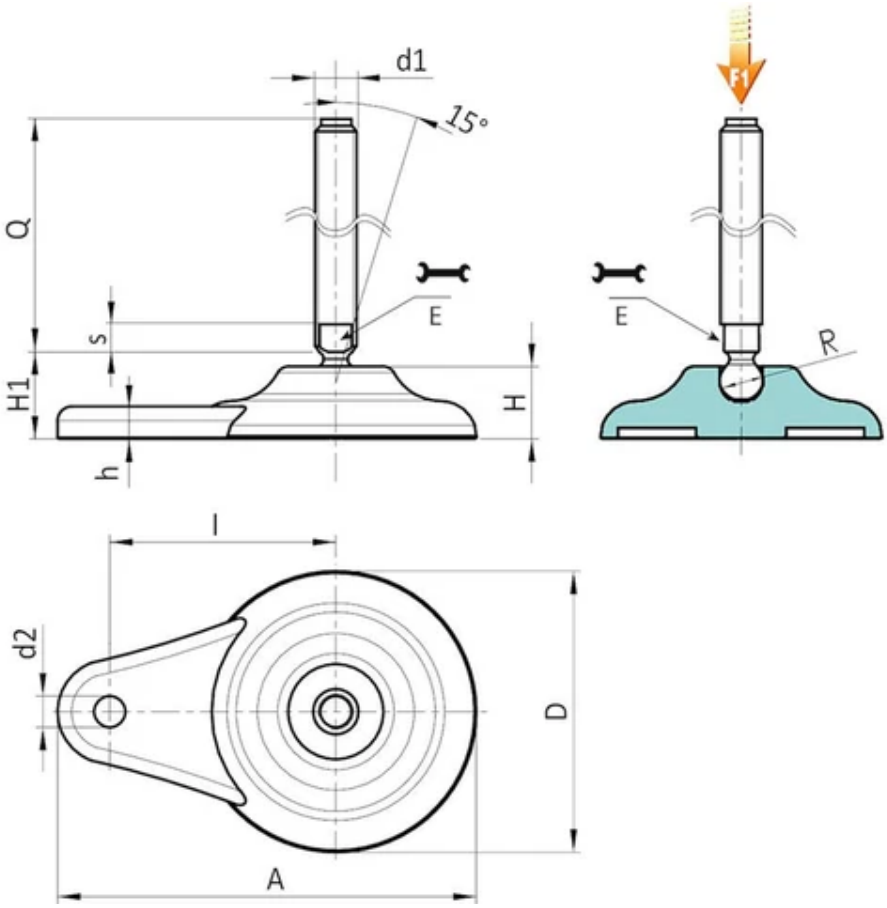

Version P706: Teardrop mounting foot with ground fixing - stem type B (with milled seat for wrench) and ball 15

Code	Art.	D	H	l	H1	h	A	E	s	d2	R	d1 6g	Q	Weight (g)	F1 (kN)
P706080.0002	P706080.TM20X07001	80	20	65	26	9	120	16	7	9	15	M20	70	231	17
P706080.0004	P706080.TM20X09001	80	20	65	26	9	120	16	7	9	15	M20	90	263	17
P706080.0007	P706080.TM20X13001	80	20	65	26	9	120	16	7	9	15	M20	130	327	17
P706080.0009	P706080.TM20X15001	80	20	65	26	9	120	16	7	9	15	M20	150	362	17
P706080.0012	P706080.TM20X19001	80	20	65	26	9	120	16	7	9	15	M20	190	427	17
P706080.0014	P706080.TM20X21001	80	20	65	26	9	120	16	7	9	15	M20	210	462	17
P706080.0017	P706080.TM24X15001	80	20	65	26	9	120	16	7	9	15	M24	150	567	17
P706080.0019	P706080.TM24X17001	80	20	65	26	9	120	16	7	9	15	M24	170	627	17
P706080.0021	P706080.TM24X19001	80	20	65	26	9	120	16	7	9	15	M24	190	687	17
P706080.0023	P706080.TM24X21001	80	20	65	26	9	120	16	7	9	15	M24	210	747	17

Attention: The expressed load limit F1 is lower than the break load by 30% and is intended as static.
Customised stud length available for a minimum of 100 pieces.

Version P706CIN: Teardrop mounting foot with ground fixing - stem type B - stainless steel - (with milled seat for wrench) and ball 15

Code	Art.	D	H	l	H1	h	A	E	s	d2	R	d1 6g	Q	Weight (g)	F1 (kN)
P706080.0003	P706080.TM20X07001CIN	80	20	65	26	9	120	16	7	9	15	M20	70	231	17
P706080.0005	P706080.TM20X09001CIN	80	20	65	26	9	120	16	7	9	15	M20	90	263	17
P706080.0008	P706080.TM20X13001CIN	80	20	65	26	9	120	16	7	9	15	M20	130	327	17
P706080.0010	P706080.TM20X15001CIN	80	20	65	26	9	120	16	7	9	15	M20	150	362	17
P706080.0013	P706080.TM20X19001CIN	80	20	65	26	9	120	16	7	9	15	M20	190	427	17

Code	Art.	D	H	I	H1	h	A	E	s	d2	R	d1 6g	Q	Weight (g)	F1 (kN)
P706080.0015	P706080.TM20X21001CIN	80	20	65	26	9	120	16	7	9	15	M20	210	462	17
P706080.0016	P706080.TM24X11001CIN	80	20	65	26	9	120	16	7	9	15	M24	110	447	17
P706080.0018	P706080.TM24X15001CIN	80	20	65	26	9	120	16	7	9	15	M24	150	567	17
P706080.0022	P706080.TM24X19001CIN	80	20	65	26	9	120	16	7	9	15	M24	190	687	17

Attention: The expressed load limit F1 is lower than the break load by 30% and is intended as static.
Customised stud length available for a minimum of 100 pieces.

P707

+135° -30° | PA6 +G.F. | SBS | RoHS COMPLIANT

16 TEARDROP MOUNTING FOOT WITH GROUND FIXING AND STEEL ARTICULATED STEM TYPE B - BALL 15 AND NON-SLIP BASE

Piedi plastica con fissaggio laterale-stelo snodato+antiscivolo

Materials:

Reinforced polyamide.

Resistant to oils and greases.

Surface finish:

Satin.

Colour:

Black (RAL 9011).

Inserts:

P707:

Galvanised steel threaded and articulated stem (ball 15) with milled seat for wrench (type B) (thread tolerance 6g).

P707CIN:

Stainless steel threaded and articulated stem (ball 15) with milled seat for wrench (type B) (Aisi 303) (thread tolerance 6g).

Non-slip base:

Non-slip base in thermoplastic rubber SBS 75 Shore, black RAL 9011. Resistant to oils and greases. Push-fit assembly.

Ground fixing:

Through hole obtained by moulding the plastic.

Special requests:

Upon request and for special quantities inserts can be supplied with customised lengths.

Upon request and for special quantities the foot can be supplied in Orange (RAL 2004).

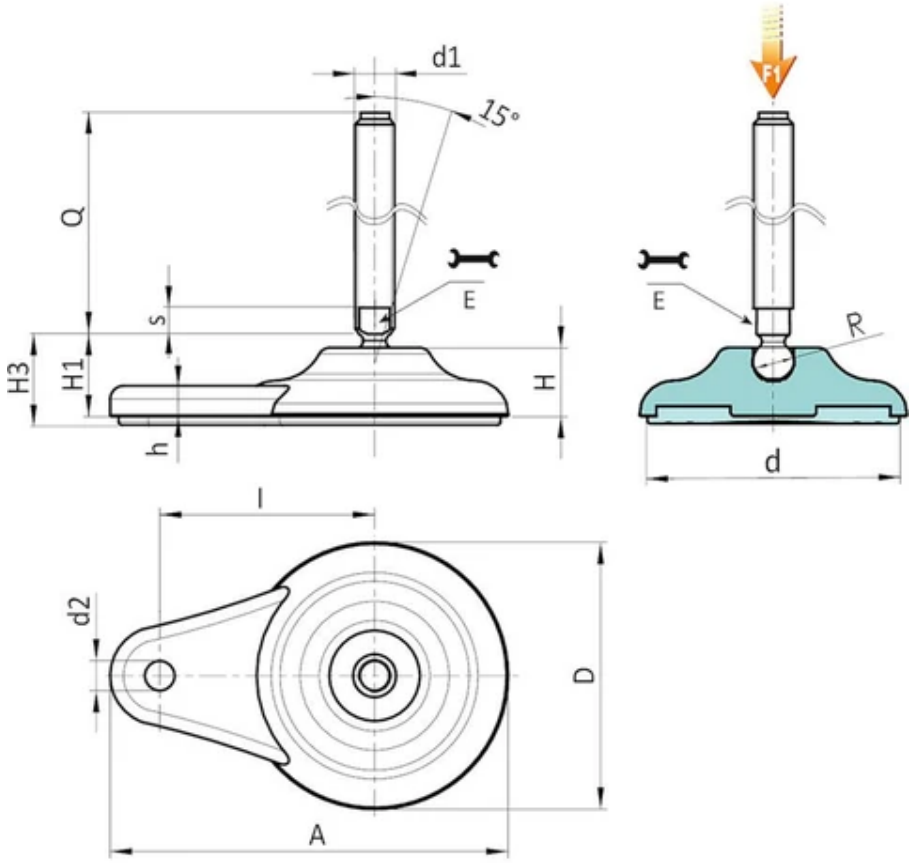

Version P707: Teardrop mounting foot with ground fixing - stem type B (with milled seat for wrench) and ball 15 - with SBS non-slip base

Code	Art.	D	H	l	H1	H3	h	A	E	s	d2	d	R	d1 6g	Q	Weight (g)	F1 (kN)
P707080.0001	P707080.TM20X5001	80	20	65	26	29	9	120	16	7	9	70	15	M20	50	222	17
P707080.0002	P707080.TM20X7001	80	20	65	26	29	9	120	16	7	9	70	15	M20	70	254	17
P707080.0004	P707080.TM20X9001	80	20	65	26	29	9	120	16	7	9	70	15	M20	90	286	17
P707080.0006	P707080.TM20X11001	80	20	65	26	29	9	120	16	7	9	70	15	M20	110	318	17
P707080.0007	P707080.TM20X13001	80	20	65	26	29	9	120	16	7	9	70	15	M20	130	350	17
P707080.0009	P707080.TM20X15001	80	20	65	26	29	9	120	16	7	9	70	15	M20	150	385	17
P707080.0011	P707080.TM20X17001	80	20	65	26	29	9	120	16	7	9	70	15	M20	170	417	17
P707080.0012	P707080.TM20X19001	80	20	65	26	29	9	120	16	7	9	70	15	M20	190	450	17
P707080.0014	P707080.TM20X21001	80	20	65	26	29	9	120	16	7	9	70	15	M20	210	485	17
P707080.0017	P707080.TM24X15001	80	20	65	26	29	9	120	19	7	9	70	15	M24	150	590	17
P707080.0019	P707080.TM24X17001	80	20	65	26	29	9	120	19	7	9	70	15	M24	170	650	17
P707080.0020	P707080.TM24X19001	80	20	65	26	29	9	120	19	7	9	70	15	M24	190	710	17
P707080.0022	P707080.TM24X21001	80	20	65	26	29	9	120	19	7	9	70	15	M24	210	770	17

Attention: The expressed load limit F1 is lower than the break load by 30% and is intended as static.
Customised stud length available for a minimum of 100 pieces.

Version P707CIN: Teardrop mounting foot with ground fixing - stem type B - stainless steel - (with milled seat for wrench) and ball 15 - with SBS non-slip base

Code	Art.	D	H	l	H1	H3	h	A	E	s	d2	d	R	d1 6g	Q	Weight (g)	F1 (kN)
P707080.0003	P707080.TM20X7001CIN	80	20	65	26	29	9	120	16	7	9	70	15	M20	70	254	17

Code	Art.	D	H	I	H1	H3	h	A	E	s	d2	d	R	d1 6g	Q	Weight (g)	F1 (kN)
P707080.0005	P707080.TM20X9001CIN	80	20	65	26	29	9	120	16	7	9	70	15	M20	90	286	17
P707080.0008	P707080.TM20X13001CIN	80	20	65	26	29	9	120	16	7	9	70	15	M20	130	350	17
P707080.0010	P707080.TM20X15001CIN	80	20	65	26	29	9	120	16	7	9	70	15	M20	150	385	17
P707080.0013	P707080.TM20X19001CIN	80	20	65	26	29	9	120	16	7	9	70	15	M20	190	450	17
P707080.0015	P707080.TM20X21001CIN	80	20	65	26	29	9	120	16	7	9	70	15	M20	210	485	17
P707080.0016	P707080.TM24X11001CIN	80	20	65	26	29	9	120	19	7	9	70	15	M24	110	470	17
P707080.0018	P707080.TM24X15001CIN	80	20	65	26	29	9	120	19	7	9	70	15	M24	150	590	17
P707080.0021	P707080.TM24X19001CIN	80	20	65	26	29	9	120	19	7	9	70	15	M24	190	710	17

Attention: The expressed load limit F1 is lower than the break load by 30% and is intended as static.
Customised stud length available for a minimum of 100 pieces.

P708

+135° -30° | PA6 +G.F. | RoHS COMPLIANT

16

TEARDROP MOUNTING FOOT WITH GROUND FIXING AND STEEL ARTICULATED STEM TYPE B - BALL 24

Piedi plastica con fissaggio laterale-stelo snodato

Materials:

Reinforced polyamide.

Resistant to oils and greases.

Surface finish:

Satin.

Colour:

Black (RAL 9011).

Inserts:

P708:

Galvanised steel threaded and articulated stem (ball 24) with milled seat for wrench (type B) (thread tolerance 6g).

P708CIN:

Stainless steel threaded and articulated stem (ball 24) with milled seat for wrench (type B) (Aisi 304) (thread tolerance 6g).

Ground fixing:

Through hole obtained by moulding the plastic.

Special requests:

Upon request and for special quantities inserts can be supplied with customised lengths.

Upon request and for special quantities the foot can be supplied in Orange (RAL 2004).

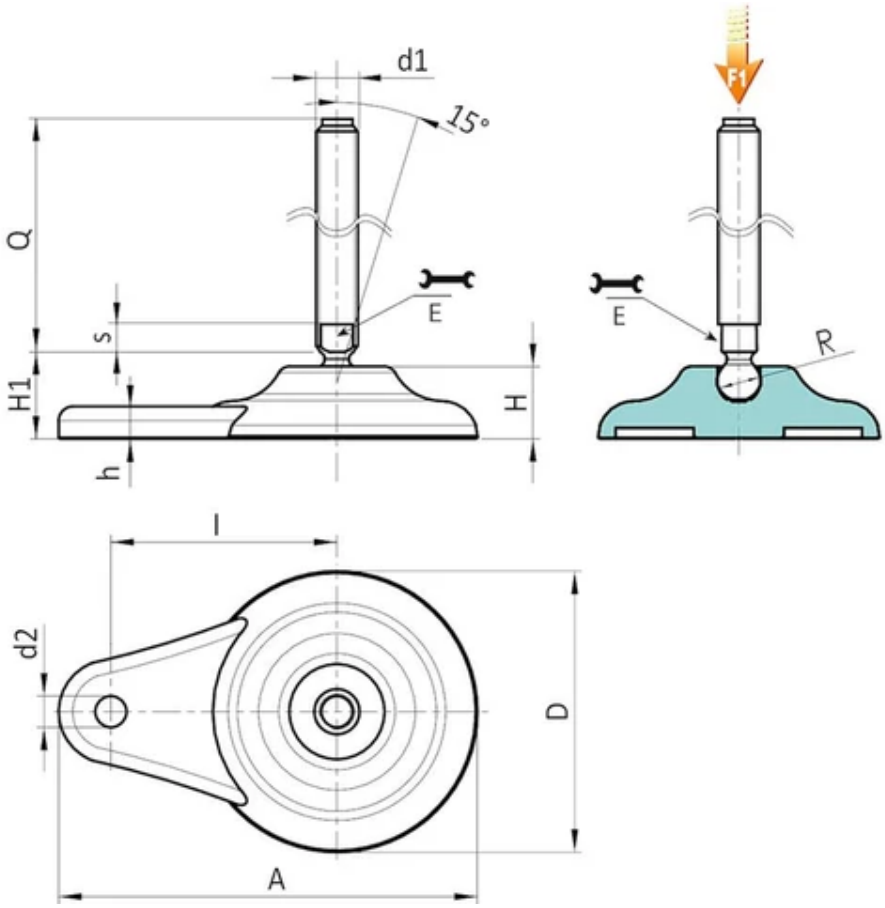

Version P708: Teardrop mounting foot with ground fixing - stem type B (with milled seat for wrench) and ball 24

Code	Art.	D	H	l	H1	h	A	E	s	d2	R	d1 6g	Q	Weight (g)	F1 (kN)
P708080.0001	P708080.TM24X11001	80	20	65	32	9	120	19	10	9	24	M24	110	446	25
P708080.0003	P708080.TM24X13001	80	20	65	32	9	120	19	10	9	24	M24	130	506	25
P708080.0005	P708080.TM24X15001	80	20	65	32	9	120	19	10	9	24	M24	150	566	25
P708080.0007	P708080.TM24X17001	80	20	65	32	9	120	19	10	9	24	M24	170	626	25
P708080.0010	P708080.TM30X11001	80	20	65	32	9	120	27	12	9	24	M30	110	606	25
P708080.0011	P708080.TM30X13001	80	20	65	32	9	120	27	12	9	24	M30	130	693	25
P708080.0013	P708080.TM30X15001	80	20	65	32	9	120	27	12	9	24	M30	150	781	25
P708080.0014	P708080.TM30X17001	80	20	65	32	9	120	27	12	9	24	M30	170	869	25
P708080.0016	P708080.TM30X19001	80	20	65	32	9	120	27	12	9	24	M30	190	956	25
P708080.0017	P708080.TM30X21001	80	20	65	32	9	120	27	12	9	24	M30	210	1046	25

Attention: The expressed load limit F1 is lower than the break load by 30% and is intended as static.
Customised stud length available for a minimum of 100 pieces.

Version P708CIN: Teardrop mounting foot with ground fixing - stem type B - stainless steel - (with milled seat for wrench) and ball 24

Code	Art.	D	H	l	H1	h	A	E	s	d2	R	d1 6g	Q	Weight (g)	F1 (kN)
P708080.0002	P708080.TM24X11001CIN	80	20	65	32	9	120	19	10	9	24	M24	110	446	25
P708080.0004	P708080.TM24X13001CIN	80	20	65	32	9	120	19	10	9	24	M24	130	506	25
P708080.0006	P708080.TM24X15001CIN	80	20	65	32	9	120	19	10	9	24	M24	150	566	25
P708080.0009	P708080.TM24X19001CIN	80	20	65	32	9	120	19	10	9	24	M24	190	686	25
P708080.0012	P708080.TM30X13001CIN	80	20	65	32	9	120	27	12	9	24	M30	130	693	25

Code	Art.	D	H	l	H1	h	A	E	s	d2	R	d1 6g	Q	Weight (g)	F1 (kN)
P708080.0015	P708080.TM30X17001CIN	80	20	65	32	9	120	27	12	9	24	M30	170	869	25
P708080.0018	P708080.TM30X21001CIN	80	20	65	32	9	120	27	12	9	24	M30	210	1046	25

Attention: The expressed load limit F1 is lower than the break load by 30% and is intended as static.
Customised stud length available for a minimum of 100 pieces.

P709

+135° -30° | PA6 +G.F. | SBS | RoHS COMPLIANT

16 TEARDROP MOUNTING FOOT WITH GROUND FIXING AND STEEL ARTICULATED STEM TYPE B - BALL 24 AND NON-SLIP BASE

Piedi plastica con fissaggio laterale-stelo snodato+antiscivolo

Materials:

Reinforced polyamide.

Resistant to oils and greases.

Surface finish:

Satin.

Colour:

Black (RAL 9011).

Inserts:

P709:

Galvanised steel threaded and articulated stem (ball 24) with milled seat for wrench (type B) (thread tolerance 6g).

P709CIN:

Stainless steel threaded and articulated stem (ball 24) with milled seat for wrench (type B) (Aisi 304) (thread tolerance 6g).

Non-slip base:

Non-slip base in thermoplastic rubber SBS 75 Shore, black RAL 9011. Resistant to oils and greases. Push-fit assembly.

Ground fixing:

Through hole obtained by moulding the plastic.

Special requests:

Upon request and for special quantities inserts can be supplied with customised lengths.

Upon request and for special quantities the foot can be supplied in Orange (RAL 2004).

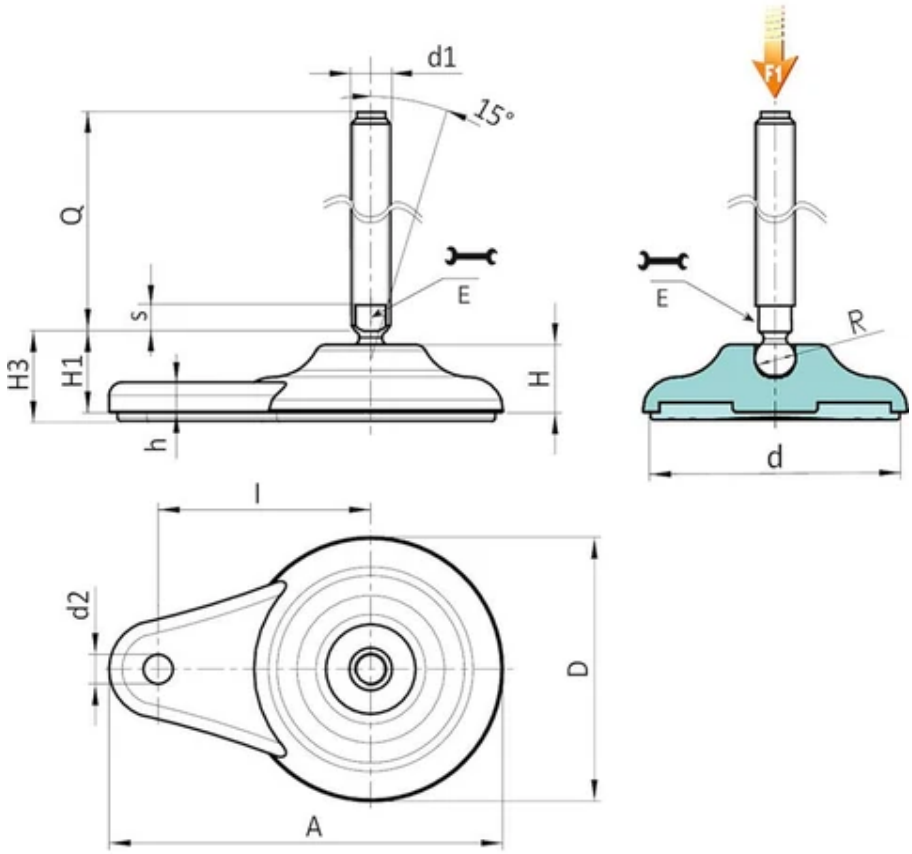

Version P709: Teardrop mounting foot with ground fixing - stem type B (with milled seat for wrench) and ball 24 - with SBS non-slip base

Code	Art.	D	H	l	H1	H3	h	A	E	s	d2	d	R	d1 6g	Q	Weight (g)	F1 (kN)
P709080.0001	P709080.TM24X11001	80	20	65	32	35	9	120	19	10	9	70	24	M24	110	469	25
P709080.0003	P709080.TM24X13001	80	20	65	32	35	9	120	19	10	9	70	24	M24	130	529	25
P709080.0005	P709080.TM24X15001	80	20	65	32	35	9	120	19	10	9	70	24	M24	150	589	25
P709080.0007	P709080.TM24X17001	80	20	65	32	35	9	120	19	10	9	70	24	M24	170	649	25
P709080.0008	P709080.TM30X11001	80	20	65	32	35	9	120	27	12	9	70	24	M30	110	629	25
P709080.0009	P709080.TM30X13001	80	20	65	32	35	9	120	27	12	9	70	24	M30	130	716	25
P709080.0011	P709080.TM30X15001	80	20	65	32	35	9	120	27	12	9	70	24	M30	150	804	25
P709080.0012	P709080.TM30X17001	80	20	65	32	35	9	120	27	12	9	70	24	M30	170	892	25
P709080.0014	P709080.TM30X19001	80	20	65	32	35	9	120	27	12	9	70	24	M30	190	979	25
P709080.0015	P709080.TM30X21001	80	20	65	32	35	9	120	27	12	9	70	24	M30	210	1069	25

Attention: The expressed load limit F1 is lower than the break load by 30% and is intended as static.
Customised stud length available for a minimum of 100 pieces.

Version P709CIN: Foot with lateral ground fixing - stem type B - stainless steel - (with milled seat for wrench) and ball 24 - with SBS non-slip base

Code	Art.	D	H	l	H1	H3	h	A	E	s	d2	d	R	d1 6g	Q	Weight (g)	F1 (kN)
P709080.0002	P709080.TM24X11001CIN	80	20	65	32	35	9	120	19	10	9	70	24	M24	110	469	25
P709080.0004	P709080.TM24X13001CIN	80	20	65	32	35	9	120	19	10	9	70	24	M24	130	529	25
P709080.0006	P709080.TM24X15001CIN	80	20	65	32	35	9	120	19	10	9	70	24	M24	150	589	25
-	P709080.TM24X19001CIN	80	20	65	32	35	9	120	19	10	9	70	24	M24	190	709	25

Code	Art.	D	H	I	H1	H3	h	A	E	s	d2	d	R	d1 6g	Q	Weight (g)	F1 (kN)
P709080.0010	P709080.TM30X13001CIN	80	20	65	32	35	9	120	27	12	9	70	24	M30	130	716	25
P709080.0013	P709080.TM30X17001CIN	80	20	65	32	35	9	120	27	12	9	70	24	M30	170	892	25
P709080.0016	P709080.TM30X21001CIN	80	20	65	32	35	9	120	27	12	9	70	24	M30	210	1069	25

Attention: The expressed load limit F1 is lower than the break load by 30% and is intended as static.
Customised stud length available for a minimum of 100 pieces.

P800

+135° -30° | PA6 +G.F. | RoHS COMPLIANT

16 MOUNTING FOOT WITH REVOLVING STEM AND GROUND FIXING

Piedi con stelo girevole

Materials:

Reinforced polyamide.

Resistant to oils and greases.

Surface finish:

Satin.

Colour:

Black (RAL 9011).

Inserts:

Galvanised steel non-articulated revolving threaded stem, fixed with a nut.

(1) Stainless steel self-locking nut (Aisi 304) thin series UNI 7474.

(2) Stainless steel washer (Aisi 304).

Ground fixing:

The mounting foot is supplied with closed holes for anchoring to the ground. To open them pierce the plastic membrane (see drawing).

Special requests:

Upon request and for special quantities inserts can be supplied with customised lengths.

Upon request and for special quantities the foot can be supplied in Orange (RAL 2004).

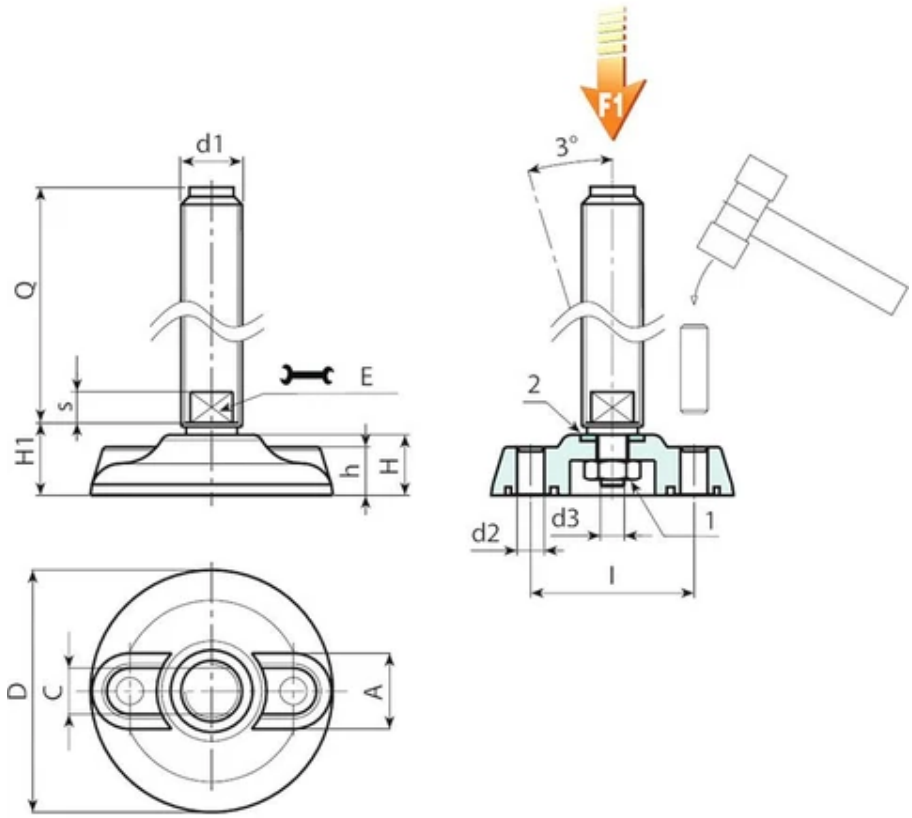

Version P800: Mounting foot with revolving stem and fixed with a nut.

Code	Art.	D	H	l	H1	h	A	s	d2	d3	E	d1 6g	Q	Weight (g)	F1 (kN)
P800080.0006	P800080.TM12X5001	80	20	54	32	16	18,5	8	9	M8	10	M12	50	130	13
P800080.0007	P800080.TM12X9001	80	20	54	32	16	18,5	8	9	M8	10	M12	90	143	13
P800080.0008	P800080.TM14X11001	80	20	54	32	16	18,5	8	9	M8	12	M14	110	181	13
P800080.0016	P800080.TM16X15001	80	20	54	32	16	18,5	8	9	M8	13	M16	150	274	13
P800105.0016	P800105.TM16X15001	105	22	74	36	18	22	10	11	M10	13	M16	150	324	15
P800105.0025	P800105.TM20X15001	105	22	74	36	18	22	10	11	M10	17	M20	150	417	15
P800105.0027	P800105.TM20X19001	105	22	74	36	18	22	10	11	M10	17	M20	190	500	15
P800105.0031	P800105.TM24X15001	105	22	74	36	18	22	10	11	M10	19	M24	150	553	15
P800105.0033	P800105.TM24X19001	105	22	74	36	18	22	10	11	M10	19	M24	190	673	15
P800105.0037	P800105.TM30X15001	105	22	74	36	18	22	10	11	M10	24	M30	150	866	15
P800105.0039	P800105.TM30X19001	105	22	74	36	18	22	10	11	M10	24	M30	190	1055	15
P800130.0007	P800130.TM16X9001	130	24	99	36	20	21	10	13	M10	13	M16	90	243	17
P800130.0004	P800130.TM16X15001	130	24	99	36	20	21	10	13	M10	13	M16	150	324	17
P800130.0008	P800130.TM20X11001	130	24	99	36	20	21	10	13	M10	17	M20	110	404	17
P800130.0010	P800130.TM20X15001	130	24	99	36	20	21	10	13	M10	17	M20	150	485	17
P800130.0012	P800130.TM20X19001	130	24	99	36	20	21	10	13	M10	17	M20	190	565	17
P800130.0016	P800130.TM24X15001	130	24	99	36	20	21	10	13	M10	19	M24	150	618	17
P800130.0018	P800130.TM24X19001	130	24	99	36	20	21	10	13	M10	19	M24	190	738	17
P800130.0022	P800130.TM30X15001	130	24	99	36	20	21	10	13	M10	24	M30	150	931	17
P800130.0024	P800130.TM30X19001	130	24	99	36	20	21	10	13	M10	24	M30	190	1120	17

Customised stud length available for a minimum of 100 pieces.
Attention: The expressed load limit F1 is lower than the break load by 30% and is intended as static.

P801

+135° -30° | PA6 +G.F. | RoHS COMPLIANT

16 MOUNTING FOOT WITH REVOLVING STEM AND GROUND FIXING

Piedi con stelo girevole

Materials:

Reinforced polyamide.

Resistant to oils and greases.

Surface finish:

Satin.

Colour:

Black (RAL 9011).

Inserts:

Galvanised steel non-articulated revolving threaded stem, fixed with a circlip.

(1) Circlip in black oxide treated steel UNI 7435.

(2) Stainless steel washer (Aisi 304).

Ground fixing:

The mounting foot is supplied with closed holes for anchoring to the ground. To open them pierce the plastic membrane (see drawing).

Special requests:

Upon request and for special quantities inserts can be supplied with customised lengths.

Upon request and for special quantities the foot can be supplied in Orange (RAL 2004).

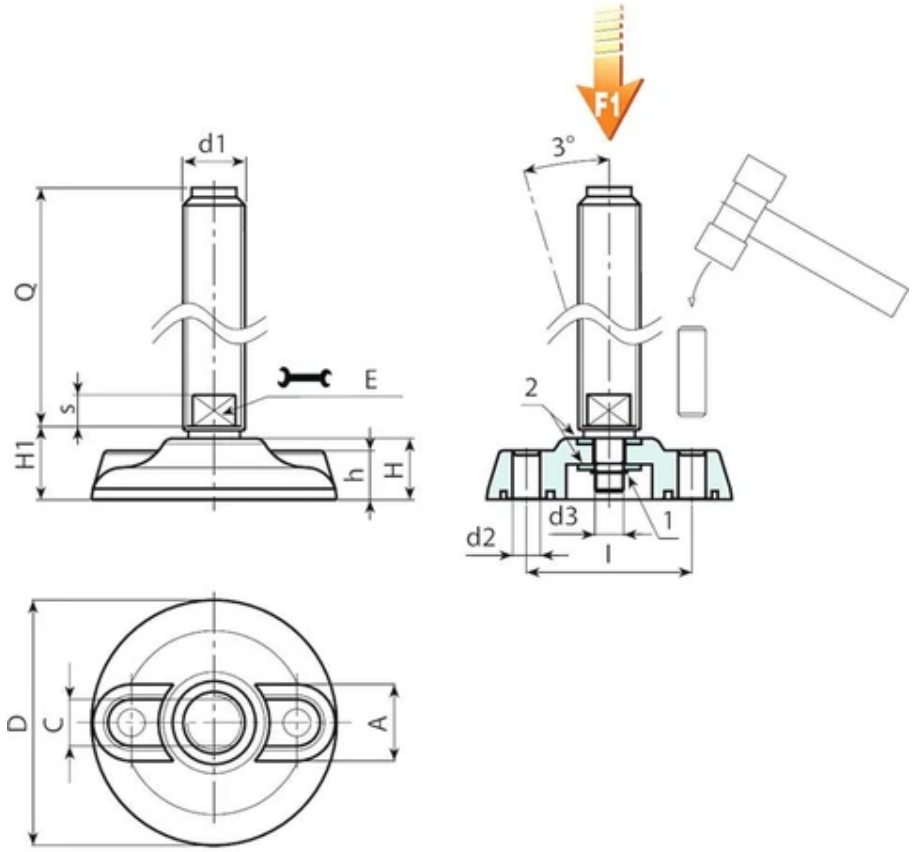

Version P801: Mounting foot with revolving stem and fixed with a circlip.

Code	Art.	D	H	l	H1	h	A	s	d2	d3	E	d1 6g	Q	Weight (g)	F1 (kN)
P801080.0025	P801080.TM12X05001	80	20	54	32	16	18,5	8	9	8	10	M12	50	130	13
P801080.0001	P801080.TM12X09001	80	20	54	32	16	18,5	8	9	8	10	M12	90	143	13
P801080.0008	P801080.TM14X11001	80	20	54	32	16	18,5	8	9	8	12	M14	110	175	13
P801080.0016	P801080.TM16X15001	80	20	54	32	16	18,5	8	9	8	13	M16	150	274	13
P801105.0016	P801105.TM16X15001	105	22	74	36	18	22	8	11	10	13	M16	150	324	15
P801105.0022	P801105.TM20X15001	105	22	74	36	18	22	10	11	10	17	M20	150	417	15
P801105.0024	P801105.TM20X19001	105	22	74	36	18	22	10	11	10	17	M20	190	500	15
P801105.0028	P801105.TM24X15001	105	22	74	36	18	22	10	11	10	19	M24	150	553	15
P801105.0030	P801105.TM24X19001	105	22	74	36	18	22	10	11	10	19	M24	190	673	15
P801105.0034	P801105.TM30X15001	105	22	74	36	18	22	10	11	10	24	M30	150	866	15
P801105.0036	P801105.TM30X19001	105	22	74	36	18	22	10	11	10	24	M30	190	1055	15
P801130.0001	P801130.TM16X09001	130	24	99	36	20	21	10	13	10	13	M16	90	310	17
P801130.0004	P801130.TM16X15001	130	24	99	36	20	21	10	13	10	13	M16	150	391	17
P801130.0007	P801130.TM20X11001	130	24	99	36	20	21	10	13	10	17	M20	110	404	17
P801130.0009	P801130.TM20X15001	130	24	99	36	20	21	10	13	10	17	M20	150	485	17
P801130.0011	P801130.TM20X19001	130	24	99	36	20	21	10	13	10	17	M20	190	565	17
P801130.0016	P801130.TM24X15001	130	24	99	36	20	21	10	13	10	19	M24	150	618	17
P801130.0018	P801130.TM24X19001	130	24	99	36	20	21	10	13	10	19	M24	190	738	17
P801130.0022	P801130.TM30X15001	130	24	99	36	20	21	10	13	10	24	M30	150	931	17
P801130.0024	P801130.TM30X19001	130	24	99	36	20	21	10	13	10	24	M30	190	1120	17

Customised stud length available for a minimum of 100 pieces.
Attention: The expressed load limit F1 is lower than the break load by 30% and is intended as static.

P814

+135° -30° | PA6 +G.F. | RoHS COMPLIANT

16 SOLID MOUNTING FOOT WITH THREADED AND ARTICULATED STEM

Piedi in plastica - stelo snodato

Materials:

Reinforced polyamide.

Resistant to oils and greases.

Surface finish:

Satin.

Colour:

Black (RAL 9011).

Inserts:

Galvanized steel threaded stem with ball joint (thread tolerance 6g), with milled seat for adjustment wrench.

Notes: The base of mounting foot P814 can be used in combination with other handgrips in order to obtain a greater closing surface or thrust.

Special requests:

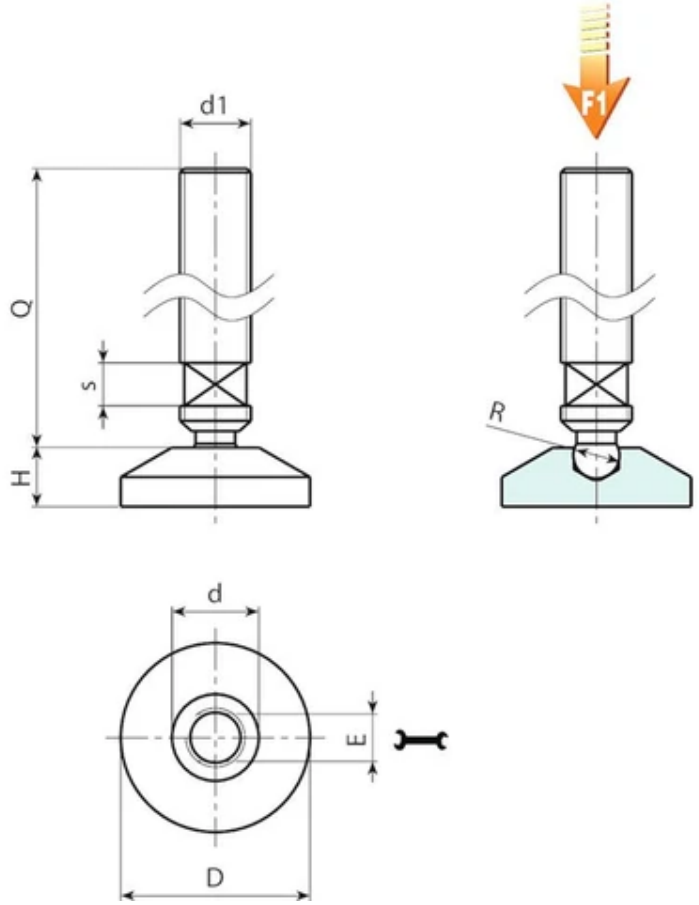

Code	Art.	D	H	d	E	s	R	d1	Q	Weight (g)	F1 (N)
P814032.0001	P814032.TM10X5001	32	10	15.5	6	6	8	M10	50	32	4000
P814032.0002	P814032.TM10X9001	32	10	15.5	6	6	8	M10	90	53	4000
P814032.0004	P814032.TM12X5001	32	10	15.5	6	6	8	M12	50	50	4000
P814032.0005	P814032.TM12X9001	32	10	15.5	6	6	8	M12	90	90	4000

Attention: The expressed load limit F1 is lower than the break load by 30% and is intended as static.
Customised stud length available for a minimum of 150 pieces.

P820

+135° -30° | PA6 +G.F. | RoHS COMPLIANT

16

MOUNTING AND THRUST FOOT WITH THREADED AND ARTICULATED STEM

Piedi in plastica - stelo snodato

Materials:

Reinforced polyamide.

Resistant to oils and greases.

Surface finish:

Satin.

Colour:

Black (RAL 9011).

Inserts:

Galvanized steel threaded stem with ball joint (thread tolerance 6g), with milled seat for adjustment wrench.

Special requests:

Upon request and for special quantities inserts can be supplied with customised lengths.

Upon request and for special quantities inserts can be supplied in different materials.

Upon request and for special quantities the foot can be supplied in Orange (RAL 2004).

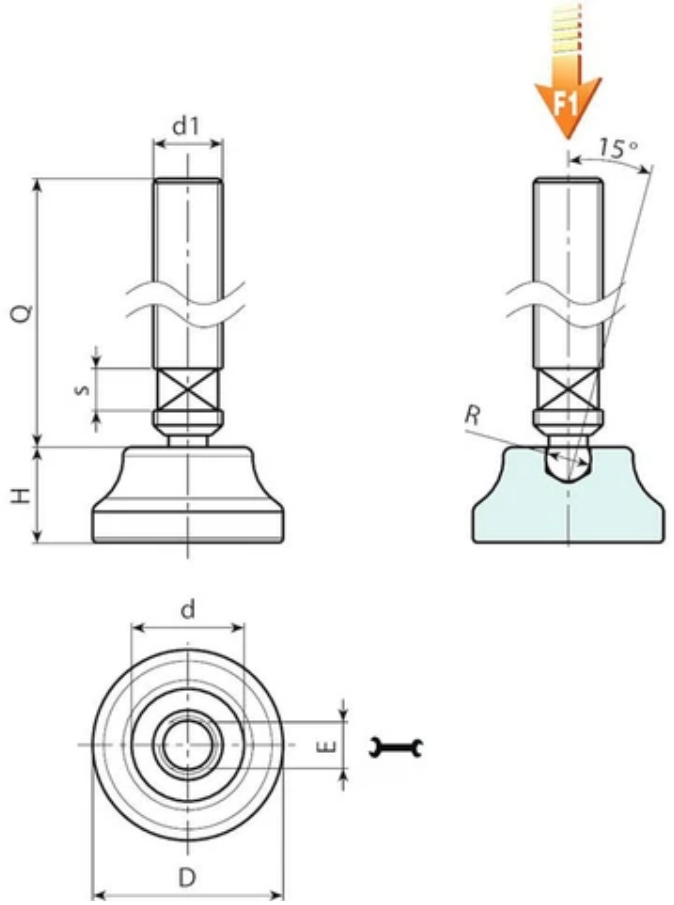

Code	Art.	D	H	d	E	s	R	d1 6g	Q	Weight (g)	F1 (kN)
P820019.0003	P820019.TM08X5001	19	10	13	6	6	6.1	M8	50	20	4
P820019.0005	P820019.TM08X9001	19	10	13	6	6	6.1	M8	90	32	4
P820022.0001	P820022.TM08X5001	22	11	15	6	6	6.1	M8	50	21	4
P820022.0003	P820022.TM08X9001	22	11	15	6	6	6.1	M8	90	33	4
P820022.0004	P820022.TM10X5001	22	11	15	8	6	7.8	M10	50	31	4
P820022.0007	P820022.TM10X9001	22	11	15	8	6	7.8	M10	90	50	4
P820026.0002	P820026.TM08X5001	26	12.5	18	6	6	6.1	M8	50	24	4
P820026.0003	P820026.TM08X9001	26	12.5	18	6	6	6.1	M8	90	36	4
P820026.0004	P820026.TM10X5001	26	12.5	18	8	6	7.8	M10	50	34	4
P820026.0005	P820026.TM10X9001	26	12.5	18	8	6	7.8	M10	90	53	4
P820026.0006	P820026.TM12X5001	26	12.5	18	10	6	9.4	M12	50	46	4
P820026.0007	P820026.TM12X9001	26	12.5	18	10	6	9.4	M12	90	73	4

Attention: The expressed load limit F1 is lower than the break load by 30% and is intended as static.
Customised stud length available for a minimum of 150 pieces.

P821

+135° -30° | PA6 +G.F. | SBS | RoHS COMPLIANT

16

SOLID MOUNTING AND THRUST FOOT WITH NON-SLIP BASE

Piedi plastica - stelo snodato + antiscivolo

Materials:

Reinforced polyamide.

Resistant to oils and greases.

Surface finish:

Satin.

Colour:

Black (RAL 9011).

Inserts:

Galvanized steel threaded stem with ball joint (thread tolerance 6g), with milled seat for adjustment wrench.

Non-slip base:

Non-slip base in thermoplastic rubber SBS 75 Shore, only in black RAL 9011. Push-fit assembly.

Special requests:

Upon request and for special quantities inserts can be supplied with customised lengths.

Upon request and for special quantities inserts can be supplied in different materials.

Upon request and for special quantities the foot can be supplied in Orange (RAL 2004).

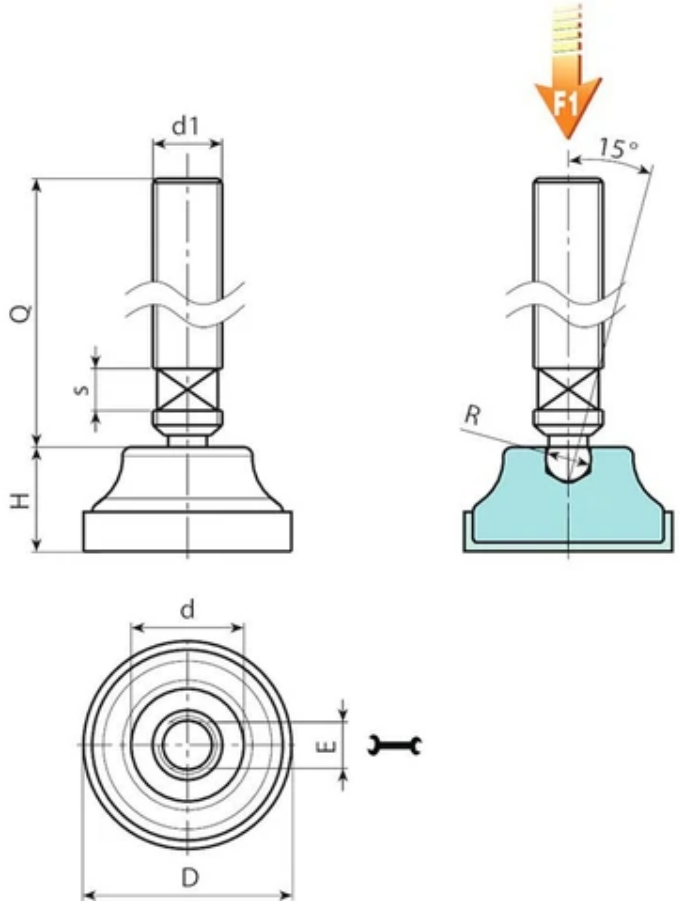

Code	Art.	D	H	d	E	s	R	d1 6g	Q	Weight (g)	F1 (kN)
P821019.0001	P821019.TM08X5001	21	12	13	6	6	6.1	M8	50	21	4
P821019.0002	P821019.TM08X9001	21	12	13	6	6	6.1	M8	90	33	4
P821022.0001	P821022.TM08X5001	24	13	15	6	6	6.1	M8	50	22	4
P821022.0003	P821022.TM08X9001	24	13	15	6	6	6.1	M8	90	34	4
P821022.0005	P821022.TM10X5001	24	13	15	8	6	7.8	M10	50	32	4
P821022.0006	P821022.TM10X9001	24	13	15	8	6	7.8	M10	90	51	4
P821026.0001	P821026.TM08X5001	28	14.5	18	6	6	6.1	M8	50	26	4
P821026.0003	P821026.TM08X9001	28	14.5	18	6	6	6.1	M8	90	38	4
P821026.0005	P821026.TM10X5001	28	14.5	18	8	6	7.8	M10	50	36	4
P821026.0006	P821026.TM10X9001	28	14.5	18	8	6	7.8	M10	90	55	4
P821026.0008	P821026.TM12X5001	28	14.5	18	10	6	9.4	M12	50	48	4
P821026.0009	P821026.TM12X9001	28	14.5	18	10	6	9.4	M12	90	75	4

Attention: The expressed load limit F1 is lower than the break load by 30% and is intended as static.
Customised stud length available for a minimum of 150 pieces.

P830

+135° -30° | PA6 +G.F. | RoHS COMPLIANT

16 MOUNTING FOOT WITH BALL JOINT (24), HEXAGONAL BASE AND THREADED HOLE

Piedi in plastica - stelo snodato

Materials:

Reinforced polyamide.

Resistant to oils and greases.

Surface finish:

Satin.

Colour:

Black (RAL 9011).

Inserts:

P830:

Galvanised steel ball joint with threaded hole (ball R.24) with hexagonal base (thread tolerance 6H).

P830CIN:

Stainless steel (Aisi 303) ball joint with threaded hole (ball R.24) with hexagonal base (thread tolerance 6H).

Special requests:

Upon request and for special quantities the foot can be supplied in Orange (RAL 2004).

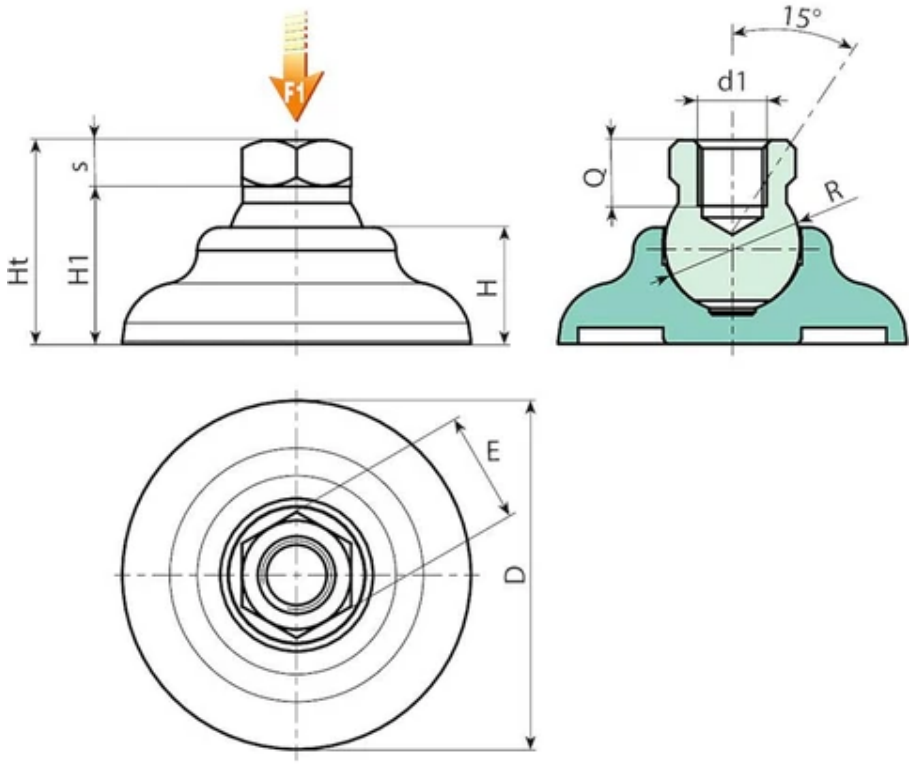

Version P830: with galvanised steel insert

Code	Art.	D	H	H1	Ht	E	s	R	d1 6H	Q	Weight (g)	F1 (kN)
P830060.0001	P830060.TM1201	60	20	27,5	35,5	19	8	24	M12	11,5	85	17
P830060.0003	P830060.TM1601	60	20	27,5	35,5	24	8	24	M16	11,5	85	17

Attention: The expressed load limit F1 is lower than the break load by 30% and is intended as static.

Version P830CIN: with stainless steel insert (Aisi 303)

Code	Art.	D	H	H1	Ht	E	s	R	d1 6H	Q	Weight (g)	F1 (kN)
P830060.0002	P830060.TM1201CIN	60	20	27,5	35,5	19	8	24	M12	11,5	85	17
P830060.0004	P830060.TM1601CIN	60	20	27,5	35,5	24	8	24	M16	11,5	85	17

Attention: The expressed load limit F1 is lower than the break load by 30% and is intended as static.

P900

+135° -30° | PA6 +G.F. | RoHS COMPLIANT

16 SMALL MOUNTING FOOT WITH STEEL ARTICULATED STEM TYPE A - BALL 12.4

Piedi in plastica - stelo snodato

Materials:

Reinforced polyamide.

Resistant to oils and greases.

Surface finish:

Satin.

Colour:

Black (RAL 9011).

Inserts:

P900:

Galvanised steel threaded and articulated stem (ball 12.4) with hexagonal base (thread tolerance 6g).

P900CIN:

Stainless steel threaded and articulated stem (ball 12.4) with hexagonal base (Aisi 303) (thread tolerance 6g).

Special requests:

Upon request and for special quantities inserts can be supplied with customised lengths.

Upon request and for special quantities the foot can be supplied in Orange (RAL 2004).

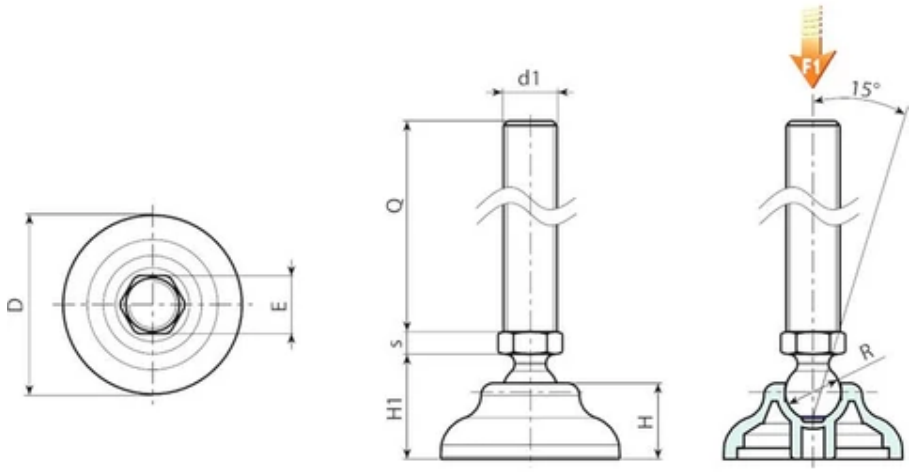

Version P900: Mounting foot with stem type A (with hexagonal base) and ball 12.4

Code	Art.	D	H	H1	E	s	R	d1 6g	Q	Weight (g)	F1 (kN)
P90040.0003	P90040.TM08X4501	40	17	23	13	5	12.4	M8	45	40	10
P90040.0005	P90040.TM08X7001	40	17	23	13	5	12.4	M8	70	47	10
P90040.0025	P90040.TM08X9001	40	17	23	13	5	12.4	M8	90	54	10
P90040.0013	P90040.TM10X4501	40	17	23	13	5	12.4	M10	45	48	10
P90040.0015	P90040.TM10X7001	40	17	23	13	5	12.4	M10	70	60	10
P90040.0007	P90040.TM10X10001	40	17	23	13	5	12.4	M10	100	75	10
P90040.0021	P90040.TM12X4501	40	17	23	13	5	12.4	M12	45	58	10
P90040.0023	P90040.TM12X7001	40	17	23	13	5	12.4	M12	70	75	10
P90040.0018	P90040.TM12X10001	40	17	23	13	5	12.4	M12	100	97	10
P90050.0002	P90050.TM08X4501	50	18	24	13	5	12.4	M8	45	46	10
P90050.0003	P90050.TM08X7001	50	18	24	13	5	12.4	M8	70	53	10
P90050.0011	P90050.TM10X4501	50	18	24	13	5	12.4	M10	45	54	10
P90050.0014	P90050.TM10X7001	50	18	24	13	5	12.4	M10	70	63	10
P90050.0006	P90050.TM10X10001	50	18	24	13	5	12.4	M10	100	77	10
P90050.0019	P90050.TM12X4501	50	18	24	13	5	12.4	M12	45	64	10
P90050.0021	P90050.TM12X7001	50	18	24	13	5	12.4	M12	70	78	10
P90050.0016	P90050.TM12X10001	50	18	24	13	5	12.4	M12	100	99	10
P90060.0004	P90060.TM08X4501	60	20	26	13	5	12.4	M8	45	58	10
P90060.0005	P90060.TM08X7001	60	20	26	13	5	12.4	M8	70	66	10
P90060.0010	P90060.TM10X4501	60	20	26	13	5	12.4	M10	45	68	10
P90060.0013	P90060.TM10X7001	60	20	26	13	5	12.4	M10	70	80	10

Code	Art.	D	H	H1	E	s	R	d1 6g	Q	Weight (g)	F1 (kN)
P90060.0006	P90060.TM10X10001	60	20	26	13	5	12.4	M10	100	95	10
P90060.0022	P90060.TM12X4501	60	20	26	13	5	12.4	M12	45	78	10
P90060.0023	P90060.TM12X7001	60	20	26	13	5	12.4	M12	70	96	10
P90060.0018	P90060.TM12X10001	60	20	26	13	5	12.4	M12	100	117	10

Attention: The expressed load limit F1 is lower than the break load by 30% and is intended as static.
Customised stud length available for a minimum of 100 pieces.

Version P900CIN: Mounting foot with stem type A (with hexagonal base) and ball 12.4 - stainless steel !da duplicazione!

Code	Art.	D	H	H1	E	s	R	d1 6g	Q	Weight (g)	F1 (kN)
P90040.0004	P90040.TM08X4501CIN	40	17	23	13	5	12.4	M8	45	40	10
P90040.0006	P90040.TM08X7001CIN	40	17	23	13	5	12.4	M8	70	47	10
P90040.0014	P90040.TM10X4501CIN	40	17	23	13	5	12.4	M10	45	48	10
P90040.0016	P90040.TM10X7001CIN	40	17	23	13	5	12.4	M10	70	60	10
P90040.0022	P90040.TM12X4501CIN	40	17	23	13	5	12.4	M12	45	58	10
P90040.0024	P90040.TM12X7001CIN	40	17	23	13	5	12.4	M12	70	75	10
P90040.0019	P90040.TM12X10001CIN	40	17	23	13	5	12.4	M12	100	99	10
P90050.0001	P90050.TM08X4501CIN	50	18	24	13	5	12.4	M8	45	46	10
P90050.0004	P90050.TM08X7001CIN	50	18	24	13	5	12.4	M8	70	53	10
P90050.0005	P90050.TM10X4501CIN	50	18	24	13	5	12.4	M10	45	54	10
P90050.0015	P90050.TM10X7001CIN	50	18	24	13	5	12.4	M10	70	63	10
P90050.0020	P90050.TM12X4501CIN	50	18	24	13	5	12.4	M12	45	64	10
P90050.0022	P90050.TM12X7001CIN	50	18	24	13	5	12.4	M12	70	78	10
P90050.0017	P90050.TM12X10001CIN	50	18	24	13	5	12.4	M12	100	102	10
P90060.0001	P90060.TM08X4501CIN	60	20	26	13	5	12.4	M8	45	58	10
P90060.0002	P90060.TM08X7001CIN	60	20	26	13	5	12.4	M8	70	66	10
P90060.0011	P90060.TM10X4501CIN	60	20	26	13	5	12.4	M10	45	68	10
P90060.0014	P90060.TM10X7001CIN	60	20	26	13	5	12.4	M10	70	80	10
P90060.0016	P90060.TM12X4501CIN	60	20	26	13	5	12.4	M12	45	78	10
P90060.0017	P90060.TM12X7001CIN	60	20	26	13	5	12.4	M12	70	96	10
P90060.0019	P90060.TM12X10001CIN	60	20	26	13	5	12.4	M12	100	120	10

Attention: The expressed load limit F1 is lower than the break load by 30% and is intended as static.
Customised stud length available for a minimum of 100 pieces.

P900ESD

+135° -30° | PA6 +G.F. | RoHS COMPLIANT

16

SMALL MOUNTING FOOT - IN ESD MATERIAL - WITH STEEL ARTICULATED STEM TYPE A - BALL 12.4

Piedi in plastica - stelo snodato

Notes: This item is made from ESD-C (Electro Static Discharge – Conductive) material with fillers in compliance with standards EN IEC 61340-5-1. The product is conductive and prevents the formation of electrostatic discharges by facilitating its grounding. A yellow pad-printed symbol (ESD-C) enables correct identification of the product. Product suitable for the production of electronic material and for use in explosive atmospheres.

Materials:

Reinforced polyamide, with conductive fillers (ESD-C).

Resistant to oils and greases.

Surface finish:

Satin.

Colour:

Black (RAL 9011).

Inserts:

P900ESD:

Galvanised steel threaded and articulated stem (ball 12.4) with hexagonal base (thread tolerance 6g).

P900CINESD:

Stainless steel threaded and articulated stem (ball 12.4) with hexagonal base (Aisi 303) (thread tolerance 6g).

Special requests:

Upon request and for special quantities inserts can be supplied with customised lengths.

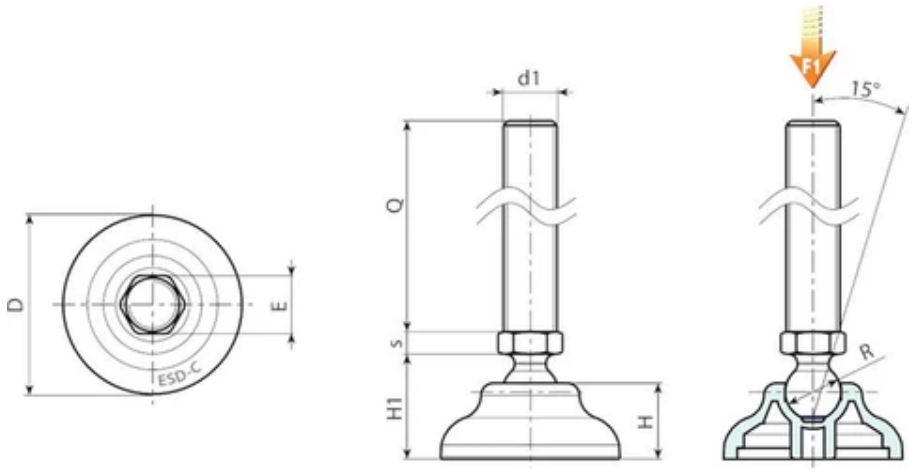

Version P900ESD: Mounting foot with stem type A (with hexagonal base) and ball 12.4

Code	Art.	D	H	H1	E	s	R	d1 6g	Q	Weight (g)	F1 (kN)
P90040.0027	P90040.TM08X4501ESD	40	17	23	13	5	12.4	M8	45	40	10
P90040.0028	P90040.TM08X7001ESD	40	17	23	13	5	12.4	M8	70	47	10
P90040.0029	P90040.TM10X4501ESD	40	17	23	13	5	12.4	M10	45	48	10
P90040.0030	P90040.TM10X7001ESD	40	17	23	13	5	12.4	M10	70	60	10
P90040.0031	P90040.TM10X10001ESD	40	17	23	13	5	12.4	M10	100	75	10
P90040.0032	P90040.TM12X4501ESD	40	17	23	13	5	12.4	M12	45	58	10
P90040.0033	P90040.TM12X7001ESD	40	17	23	13	5	12.4	M12	70	75	10
P90040.0034	P90040.TM12X10001ESD	40	17	23	13	5	12.4	M12	100	97	10
P90050.0025	P90050.TM08X4501ESD	50	18	24	13	5	12.4	M8	45	46	10
P90050.0026	P90050.TM08X7001ESD	50	18	24	13	5	12.4	M8	70	53	10
P90050.0027	P90050.TM10X4501ESD	50	18	24	13	5	12.4	M10	45	54	10
P90050.0028	P90050.TM10X7001ESD	50	18	24	13	5	12.4	M10	70	63	10
P90050.0029	P90050.TM10X10001ESD	50	18	24	13	5	12.4	M10	100	77	10
P90050.0030	P90050.TM12X4501ESD	50	18	24	13	5	12.4	M12	45	64	10
P90050.0031	P90050.TM12X7001ESD	50	18	24	13	5	12.4	M12	70	78	10
P90050.0032	P90050.TM12X10001ESD	50	18	24	13	5	12.4	M12	100	99	10
P90060.0030	P90060.TM08X4501ESD	60	20	26	13	5	12.4	M8	45	58	10
P90060.0031	P90060.TM08X7001ESD	60	20	26	13	5	12.4	M8	70	66	10
P90060.0032	P90060.TM10X4501ESD	60	20	26	13	5	12.4	M10	45	68	10
P90060.0033	P90060.TM10X7001ESD	60	20	26	13	5	12.4	M10	70	80	10
P90060.0034	P90060.TM10X10001ESD	60	20	26	13	5	12.4	M10	100	95	10

Code	Art.	D	H	H1	E	s	R	d1 6g	Q	Weight (g)	F1 (kN)
P90060.0035	P90060.TM12X4501ESD	60	20	26	13	5	12.4	M12	45	78	10
P90060.0036	P90060.TM12X7001ESD	60	20	26	13	5	12.4	M12	70	96	10
P90060.0037	P90060.TM12X10001ESD	60	20	26	13	5	12.4	M12	100	117	10

Attention: The expressed load limit F1 is lower than the break load by 30% and is intended as static.
Customised stud length available for a minimum of 100 pieces.

Version P900CINESD: Mounting foot with stem type A (with hexagonal base) and ball 12.4 - stainless steel

Code	Art.	D	H	H1	E	s	R	d1 6g	Q	Weight (g)	F1 (kN)
P90040.0035	P90040.TM08X4501CINESD	40	17	23	13	5	12.4	M8	45	40	10
P90040.0036	P90040.TM08X7001CINESD	40	17	23	13	5	12.4	M8	70	47	10
P90040.0037	P90040.TM10X4501CINESD	40	17	23	13	5	12.4	M10	45	48	10
P90040.0038	P90040.TM10X7001CINESD	40	17	23	13	5	12.4	M10	70	60	10
P90040.0039	P90040.TM12X4501CINESD	40	17	23	13	5	12.4	M12	45	58	10
P90040.0040	P90040.TM12X7001CINESD	40	17	23	13	5	12.4	M12	70	75	10
P90040.0041	P90040.TM12X10001CINESD	40	17	23	13	5	12.4	M12	100	99	10
P90050.0033	P90050.TM08X4501CINESD	50	18	24	13	5	12.4	M8	45	46	10
P90050.0034	P90050.TM08X7001CINESD	50	18	24	13	5	12.4	M8	70	53	10
P90050.0035	P90050.TM10X4501CINESD	50	18	24	13	5	12.4	M10	45	54	10
P90050.0036	P90050.TM10X7001CINESD	50	18	24	13	5	12.4	M10	70	63	10
P90050.0037	P90050.TM12X4501CINESD	50	18	24	13	5	12.4	M12	45	64	10
P90050.0038	P90050.TM12X7001CINESD	50	18	24	13	5	12.4	M12	70	78	10
P90050.0039	P90050.TM12X10001CINESD	50	18	24	13	5	12.4	M12	100	102	10
P90060.0038	P90060.TM08X4501CINESD	60	20	26	13	5	12.4	M8	45	58	10
P90060.0039	P90060.TM08X7001CINESD	60	20	26	13	5	12.4	M8	70	66	10
P90060.0040	P90060.TM10X4501CINESD	60	20	26	13	5	12.4	M10	45	68	10
P90060.0041	P90060.TM10X7001CINESD	60	20	26	13	5	12.4	M10	70	80	10
P90060.0042	P90060.TM12X4501CINESD	60	20	26	13	5	12.4	M12	45	78	10
P90060.0043	P90060.TM12X7001CINESD	60	20	26	13	5	12.4	M12	70	96	10
P90060.0044	P90060.TM12X10001CINESD	60	20	26	13	5	12.4	M12	100	120	10

Attention: The expressed load limit F1 is lower than the break load by 30% and is intended as static.
Customised stud length available for a minimum of 100 pieces.

P901

+135° -30° | PA6 +G.F. | SBS | RoHS COMPLIANT

16

SMALL MOUNTING FOOT WITH STEEL ARTICULATED STEM TYPE A - BALL 12.4 AND NON-SLIP BASE

Piedi plastica - stelo snodato + antiscivolo

Materials:

Reinforced polyamide.

Resistant to oils and greases.

Surface finish:

Satin.

Colour:

Black (RAL 9011).

Inserts:

Version P901:

Galvanised steel threaded and articulated stem (ball 12.4) with hexagonal base (thread tolerance 6g).

Version P901CIN:

Stainless steel threaded and articulated stem (ball 12.4) with hexagonal base (Aisi 303) (thread tolerance 6g).

Non-slip base:

Non-slip base in thermoplastic rubber SBS 75 Shore, black RAL 9011.

Resistant to oils and greases.

Special requests:

Upon request and for special quantities inserts can be supplied with customised lengths.

Upon request and for special quantities the foot can be supplied in Orange (RAL 2004).

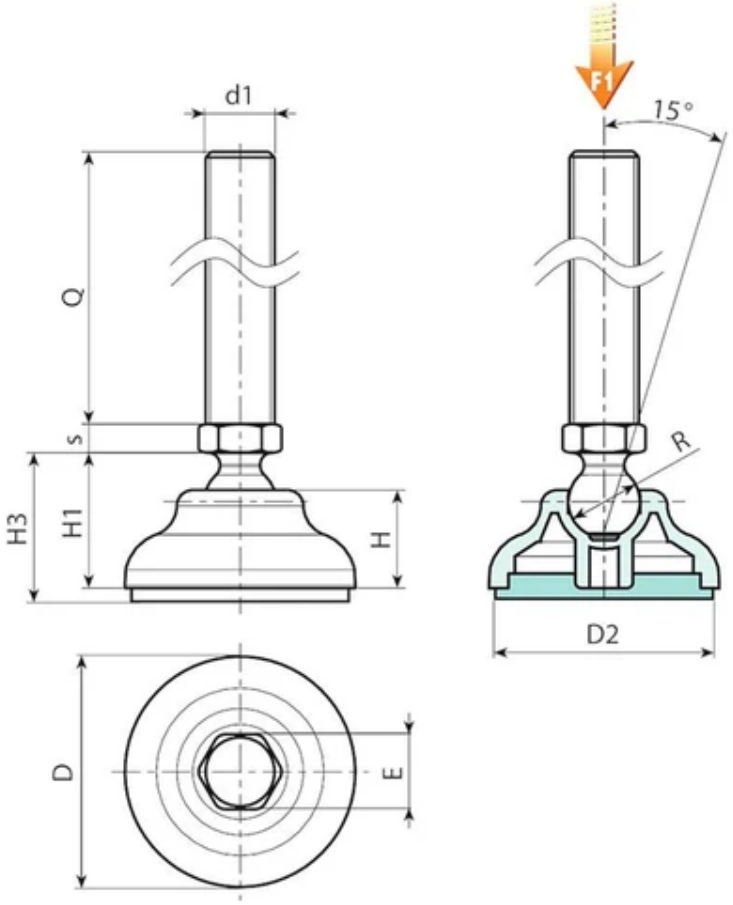

Version P901: Mounting foot with stem type A (with hexagonal base) and ball 12.4 - with SBS non-slip base

Code	Art.	D	H	H1	H3	E	s	R	d1 6g	Q	Weight (g)	F1 (kN)
P90140.0004	P90140.TM08X4501	40	17	23	26	13	5	12.5	M8	45	44	10
P90140.0008	P90140.TM08X7001	40	17	23	26	13	5	12.5	M8	70	51	10
P90140.0032	P90140.TM08X9001	40	17	23	26	13	5	12.5	M8	90	57	10
P90140.0015	P90140.TM10X4501	40	17	23	26	13	5	12.5	M10	45	52	10
P90140.0018	P90140.TM10X7001	40	17	23	26	13	5	12.5	M10	70	64	10
P90140.0011	P90140.TM10X10001	40	17	23	26	13	5	12.5	M10	100	79	10
P90140.0026	P90140.TM12X4501	40	17	23	26	13	5	12.5	M12	45	62	10
P90140.0029	P90140.TM12X7001	40	17	23	26	13	5	12.5	M12	70	79	10
P90140.0023	P90140.TM12X10001	40	17	23	26	13	5	12.5	M12	100	101	10
P90150.0001	P90150.TM08X4501	50	18	24	29	13	5	12.5	M8	45	66	10
P90150.0004	P90150.TM08X7001	50	18	24	29	13	5	12.5	M8	70	74	10
P90150.0026	P90150.TM08X9001	50	18	24	29	13	5	12.5	M8	90	82	10
P90150.0009	P90150.TM10X4501	50	18	24	29	13	5	12.5	M10	45	76	10
P90150.0012	P90150.TM10X7001	50	18	24	29	13	5	12.5	M10	70	88	10
P90150.0006	P90150.TM10X10001	50	18	24	29	13	5	12.5	M10	100	103	10
P90150.0020	P90150.TM12X4501	50	18	24	29	13	5	12.5	M12	45	86	10
P90150.0022	P90150.TM12X7001	50	18	24	29	13	5	12.5	M12	70	104	10
P90150.0017	P90150.TM12X10001	50	18	24	29	13	5	12.5	M12	100	125	10
P90160.0002	P90160.TM08X4501	60	20	26	31	13	5	12.5	M8	45	52	10
P90160.0004	P90160.TM08X7001	60	20	26	31	13	5	12.5	M8	70	59	10
P90160.0029	P90160.TM08X9001	60	20	26	31	13	5	12.5	M8	90	65	10

Code	Art.	D	H	H1	H3	E	s	R	d1 6g	Q	Weight (g)	F1 (kN)
P90160.0009	P90160.TM10X4501	60	20	26	31	13	5	12.5	M10	45	60	10
P90160.0012	P90160.TM10X7001	60	20	26	31	13	5	12.5	M10	70	69	10
P90160.0006	P90160.TM10X10001	60	20	26	31	13	5	12.5	M10	100	83	10
P90160.0019	P90160.TM12X4501	60	20	26	31	13	5	12.5	M12	45	70	10
P90160.0022	P90160.TM12X7001	60	20	26	31	13	5	12.5	M12	70	84	10
P90160.0015	P90160.TM12X10001	60	20	26	31	13	5	12.5	M12	100	105	10

Attention: The expressed load limit F1 is lower than the break load by 30% and is intended as static.
Customised stud length available for a minimum of 100 pieces.

Version P901CIN: Mounting foot with stem type A (with hexagonal base) - ball 12.4 - stainless steel - with SBS non-slip base

Code	Art.	D	H	H1	H3	E	s	R	d1 6g	Q	Weight (g)	F1 (kN)
P90140.0005	P90140.TM08X4501CIN	40	17	23	26	13	5	12.5	M8	45	40	10
P90140.0009	P90140.TM08X7001CIN	40	17	23	26	13	5	12.5	M8	70	47	10
P90140.0016	P90140.TM10X4501CIN	40	17	23	26	13	5	12.5	M10	45	48	10
P90140.0019	P90140.TM10X7001CIN	40	17	23	26	13	5	12.5	M10	70	60	10
P90140.0027	P90140.TM12X4501CIN	40	17	23	26	13	5	12.5	M12	45	58	10
P90140.0030	P90140.TM12X7001CIN	40	17	23	26	13	5	12.5	M12	70	75	10
P90140.0024	P90140.TM12X10001CIN	40	17	23	26	13	5	12.5	M12	100	97	10
P90150.0002	P90150.TM08X4501CIN	50	18	24	29	13	5	12.5	M8	45	46	10
P90150.0005	P90150.TM08X7001CIN	50	18	24	29	13	5	12.5	M8	70	53	10
P90150.0010	P90150.TM10X4501CIN	50	18	24	29	13	5	12.5	M10	45	54	10
P90150.0013	P90150.TM10X7001CIN	50	18	24	29	13	5	12.5	M10	70	63	10
P90150.0016	P90150.TM12X4501CIN	50	18	24	29	13	5	12.5	M12	45	64	10
P90150.0023	P90150.TM12X7001CIN	50	18	24	29	13	5	12.5	M12	70	78	10
P90150.0018	P90150.TM12X10001CIN	50	18	24	29	13	5	12.5	M12	100	99	10
P90160.0001	P90160.TM08X4501CIN	60	20	26	31	13	5	12.5	M8	45	58	10
P90160.0005	P90160.TM08X7001CIN	60	20	26	31	13	5	12.5	M8	70	66	10
P90160.0010	P90160.TM10X4501CIN	60	20	26	31	13	5	12.5	M10	45	68	10
P90160.0013	P90160.TM10X7001CIN	60	20	26	31	13	5	12.5	M10	70	80	10
P90160.0020	P90160.TM12X4501CIN	60	20	26	31	13	5	12.5	M12	45	78	10
P90160.0023	P90160.TM12X7001CIN	60	20	26	31	13	5	12.5	M12	70	96	10
P90160.0016	P90160.TM12X10001CIN	60	20	26	31	13	5	12.5	M12	100	117	10

Attention: The expressed load limit F1 is lower than the break load by 30% and is intended as static.
Customised stud length available for a minimum of 100 pieces.

P902

+135° -30° | PA6 +G.F. | RoHS COMPLIANT

16

MOUNTING FOOT WITH GROUND FIXING AND STEEL ARTICULATED STEM TYPE A - BALL 15

Piedi plastica con fissaggio - stelo snodato

Materials:

Reinforced polyamide. Resistant to oils and greases.

Surface finish:

Satin.

Colour:

Black (RAL 9011).

Inserts:

P902:

Galvanised steel threaded and articulated stem (ball 15) with hexagonal base (thread tolerance 6g).

P902CIN:

Stainless steel threaded and articulated stem (ball 15) with hexagonal base (Aisi 303) (thread tolerance 6g).

Ground fixing:

The mounting foot is supplied with closed holes for anchoring to the ground. To open them pierce the plastic membrane (see drawing).

Special requests:

Upon request and for special quantities inserts can be supplied with customised lengths.

Upon request and for special quantities the foot can be supplied in Orange (RAL 2004).

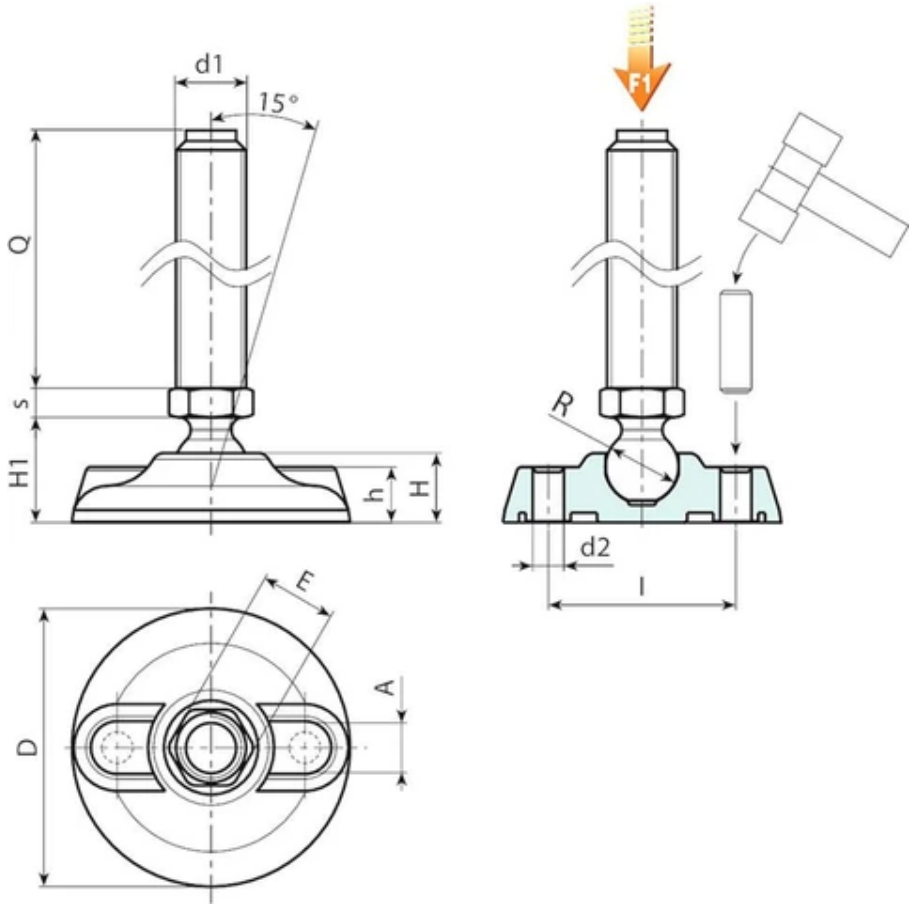

Version P902: Mounting foot with stem type A (with hexagonal base) and ball 15

Code	Art.	D	H	l	H1	h	A	E	s	d2	R	d1 6g	Q	Weight (g)	F1 (kN)
P902080.0024	P902080.TM14X5001	80	20	54	25.5	16	20	16	6.5	9	15	M14	50	126	13
P902080.0025	P902080.TM14X7001	80	20	54	25.5	16	20	16	6.5	9	15	M14	70	145	13
P902080.0026	P902080.TM14X9001	80	20	54	25.5	16	20	16	6.5	9	15	M14	90	163	13
P902080.0018	P902080.TM14X11001	80	20	54	25.5	16	20	16	6.5	9	15	M14	110	181	13
P902080.0023	P902080.TM14X15001	80	20	54	25.5	16	20	16	6.5	9	15	M14	150	217	13
P902080.0043	P902080.TM16X5001	80	20	54	25.5	16	20	16	6.5	9	15	M16	50	139	13
P902080.0044	P902080.TM16X7001	80	20	54	25.5	16	20	16	6.5	9	15	M16	70	166	13
P902080.0046	P902080.TM16X9001	80	20	54	25.5	16	20	16	6.5	9	15	M16	90	193	13
P902080.0028	P902080.TM16X11001	80	20	54	25.5	16	20	16	6.5	9	15	M16	110	220	13
P902080.0031	P902080.TM16X13001	80	20	54	25.5	16	20	16	6.5	9	15	M16	130	247	13
P902080.0034	P902080.TM16X15001	80	20	54	25.5	16	20	16	6.5	9	15	M16	150	274	13
P902080.0037	P902080.TM16X17001	80	20	54	25.5	16	20	16	6.5	9	15	M16	170	301	13
P902080.0040	P902080.TM16X19001	80	20	54	25.5	16	20	16	6.5	9	15	M16	190	328	13
P902105.0004	P902105.TM12X5001	105	22	74	28	18.5	21	16	6.5	11	15	M12	50	167	15
P902105.0005	P902105.TM12X7001	105	22	74	28	18.5	21	16	6.5	11	15	M12	70	180	15
P902105.0007	P902105.TM12X9001	105	22	74	28	18.5	21	16	6.5	11	15	M12	90	193	15
P902105.0001	P902105.TM12X11001	105	22	74	28	18.5	21	16	6.5	11	15	M12	110	206	15
P902105.0017	P902105.TM14X5001	105	22	74	28	18.5	21	16	6.5	11	15	M14	50	176	15
P902105.0018	P902105.TM14X7001	105	22	74	28	18.5	21	16	6.5	11	15	M14	70	195	15
P902105.0020	P902105.TM14X9001	105	22	74	28	18.5	21	16	6.5	11	15	M14	90	213	15
P902105.0009	P902105.TM14X11001	105	22	74	28	18.5	21	16	6.5	11	15	M14	110	231	15

Code	Art.	D	H	I	H1	h	A	E	s	d2	R	d1 6g	Q	Weight (g)	F1 (kN)
P902105.0014	P902105.TM14X15001	105	22	74	28	18.5	21	16	6.5	11	15	M14	150	268	15
P902105.0039	P902105.TM16X5001	105	22	74	28	18.5	21	16	6.5	11	15	M16	50	189	15
P902105.0041	P902105.TM16X7001	105	22	74	28	18.5	21	16	6.5	11	15	M16	70	216	15
P902105.0043	P902105.TM16X9001	105	22	74	28	18.5	21	16	6.5	11	15	M16	90	243	15
P902105.0021	P902105.TM16X11001	105	22	74	28	18.5	21	16	6.5	11	15	M16	110	270	15
P902105.0026	P902105.TM16X13001	105	22	74	28	18.5	21	16	6.5	11	15	M16	130	297	15
P902105.0030	P902105.TM16X15001	105	22	74	28	18.5	21	16	6.5	11	15	M16	150	324	15
P902105.0033	P902105.TM16X17001	105	22	74	28	18.5	21	16	6.5	11	15	M16	170	351	15
P902105.0036	P902105.TM16X19001	105	22	74	28	18.5	21	16	6.5	11	15	M16	190	378	15
P902130.0006	P902130.TM12X5001	130	24	99	30	20	21	16	6.5	13	15	M12	50	234	17
P902130.0001	P902130.TM12X7001	130	24	99	30	20	21	16	6.5	13	15	M12	70	247	17
P902130.0008	P902130.TM12X9001	130	24	99	30	20	21	16	6.5	13	15	M12	90	260	17
P902130.0003	P902130.TM12X11001	130	24	99	30	20	21	16	6.5	13	15	M12	110	273	17
P902130.0009	P902130.TM14X5001	130	24	99	30	20	21	16	6.5	13	15	M14	50	244	17
P902130.0010	P902130.TM14X7001	130	24	99	30	20	21	16	6.5	13	15	M14	70	263	17
P902130.0012	P902130.TM14X9001	130	24	99	30	20	21	16	6.5	13	15	M14	90	281	17
P902130.0013	P902130.TM14X11001	130	24	99	30	20	21	16	6.5	13	15	M14	110	299	17
P902130.0017	P902130.TM14X15001	130	24	99	30	20	21	16	6.5	13	15	M14	150	335	17
P902130.0029	P902130.TM16X5001	130	24	99	30	20	21	16	6.5	13	15	M16	50	256	17
P902130.0030	P902130.TM16X7001	130	24	99	30	20	21	16	6.5	13	15	M16	70	283	17
P902130.0031	P902130.TM16X9001	130	24	99	30	20	21	16	6.5	13	15	M16	90	310	17
P902130.0018	P902130.TM16X11001	130	24	99	30	20	21	16	6.5	13	15	M16	110	337	17
P902130.0020	P902130.TM16X13001	130	24	99	30	20	21	16	6.5	13	15	M16	130	364	17
P902130.0022	P902130.TM16X15001	130	24	99	30	20	21	16	6.5	13	15	M16	150	391	17
P902130.0024	P902130.TM16X17001	130	24	99	30	20	21	16	6.5	13	15	M16	170	418	17
P902130.0026	P902130.TM16X19001	130	24	99	30	20	21	16	6.5	13	15	M16	190	445	17

Attention: The expressed load limit F1 is lower than the break load by 30% and is intended as static.
Customised stud length available for a minimum of 100 pieces.

Version P902CIN: Mounting foot with stem type A - stainless steel - (with hexagonal base) and ball 15

Code	Art.	D	H	I	H1	h	A	E	s	d2	R	d1 6g	Q	Weight (g)	F1 (kN)
P902080.0014	P902080.TM12X7001CIN	80	20	54	25.5	16	20	16	6.5	9	15	M12	70	130	13
P902080.0016	P902080.TM12X9001CIN	80	20	54	25.5	16	20	16	6.5	9	15	M12	90	143	13
P902080.0004	P902080.TM12X11001CIN	80	20	54	25.5	16	20	16	6.5	9	15	M12	110	156	13
P902080.0017	P902080.TM14X7001CIN	80	20	54	25.5	16	20	16	6.5	9	15	M14	70	145	13
P902080.0019	P902080.TM14X11001CIN	80	20	54	25.5	16	20	16	6.5	9	15	M14	110	163	13
P902080.0022	P902080.TM14X13001CIN	80	20	54	25.5	16	20	16	6.5	9	15	M14	130	181	13
P902080.0027	P902080.TM16X5001CIN	80	20	54	25.5	16	20	16	6.5	9	15	M16	50	139	13
P902080.0045	P902080.TM16X7001CIN	80	20	54	25.5	16	20	16	6.5	9	15	M16	70	166	13
P902080.0047	P902080.TM16X9001CIN	80	20	54	25.5	16	20	16	6.5	9	15	M16	90	193	13

Code	Art.	D	H	I	H1	h	A	E	s	d2	R	d1 6g	Q	Weight (g)	F1 (kN)
P902080.0029	P902080.TM16X11001CIN	80	20	54	25.5	16	20	16	6.5	9	15	M16	110	220	13
P902080.0032	P902080.TM16X13001CIN	80	20	54	25.5	16	20	16	6.5	9	15	M16	130	247	13
P902080.0035	P902080.TM16X15001CIN	80	20	54	25.5	16	20	16	6.5	9	15	M16	150	274	13
P902080.0038	P902080.TM16X17001CIN	80	20	54	25.5	16	20	16	6.5	9	15	M16	170	301	13
P902080.0041	P902080.TM16X19001CIN	80	20	54	25.5	16	20	16	6.5	9	15	M16	190	328	13
P902105.0006	P902105.TM12X7001CIN	105	22	74	28	18.5	21	16	6.5	11	15	M12	70	180	15
P902105.0008	P902105.TM12X9001CIN	105	22	74	28	18.5	21	16	6.5	11	15	M12	90	193	15
P902105.0002	P902105.TM12X11001CIN	105	22	74	28	18.5	21	16	6.5	11	15	M12	110	206	15
P902105.0019	P902105.TM14X7001CIN	105	22	74	28	18.5	21	16	6.5	11	15	M14	70	195	15
P902105.0010	P902105.TM14X11001CIN	105	22	74	28	18.5	21	16	6.5	11	15	M14	110	231	15
P902105.0013	P902105.TM14X13001CIN	105	22	74	28	18.5	21	16	6.5	11	15	M14	130	249	15
P902105.0040	P902105.TM16X5001CIN	105	22	74	28	18.5	21	16	6.5	11	15	M16	50	189	15
P902105.0042	P902105.TM16X7001CIN	105	22	74	28	18.5	21	16	6.5	11	15	M16	70	216	15
P902105.0044	P902105.TM16X9001CIN	105	22	74	28	18.5	21	16	6.5	11	15	M16	90	243	15
P902105.0022	P902105.TM16X11001CIN	105	22	74	28	18.5	21	16	6.5	11	15	M16	110	270	15
P902105.0027	P902105.TM16X13001CIN	105	22	74	28	18.5	21	16	6.5	11	15	M16	130	297	15
P902105.0031	P902105.TM16X15001CIN	105	22	74	28	18.5	21	16	6.5	11	15	M16	150	324	15
P902105.0034	P902105.TM16X17001CIN	105	22	74	28	18.5	21	16	6.5	11	15	M16	170	351	15
P902105.0037	P902105.TM16X19001CIN	105	22	74	28	18.5	21	16	6.5	11	15	M16	190	378	15
P902130.0007	P902130.TM12X7001CIN	130	24	99	30	20	21	16	6.5	13	15	M12	70	247	17
P902130.0002	P902130.TM12X9001CIN	130	24	99	30	20	21	16	6.5	13	15	M12	90	260	17
P902130.0004	P902130.TM12X11001CIN	130	24	99	30	20	21	16	6.5	13	15	M12	110	273	17
P902130.0011	P902130.TM14X7001CIN	130	24	99	30	20	21	16	6.5	13	15	M14	70	263	17
P902130.0014	P902130.TM14X11001CIN	130	24	99	30	20	21	16	6.5	13	15	M14	110	299	17
P902130.0015	P902130.TM14X13001CIN	130	24	99	30	20	21	16	6.5	13	15	M14	130	317	17
P902130.0039	P902130.TM16X5001CIN	130	24	99	30	20	21	16	6.5	13	15	M16	50	256	17
P902130.0040	P902130.TM16X7001CIN	130	24	99	30	20	21	16	6.5	13	15	M16	70	283	17
P902130.0041	P902130.TM16X9001CIN	130	24	99	30	20	21	16	6.5	13	15	M16	90	310	17
P902130.0036	P902130.TM16X11001CIN	130	24	99	30	20	21	16	6.5	13	15	M16	110	337	17
P902130.0037	P902130.TM16X13001CIN	130	24	99	30	20	21	16	6.5	13	15	M16	130	364	17
P902130.0023	P902130.TM16X15001CIN	130	24	99	30	20	21	16	6.5	13	15	M16	150	391	17
P902130.0025	P902130.TM16X17001CIN	130	24	99	30	20	21	16	6.5	13	15	M16	170	418	17
P902130.0027	P902130.TM16X19001CIN	130	24	99	30	20	21	16	6.5	13	15	M16	190	445	17

Attention: The expressed load limit F1 is lower than the break load by 30% and is intended as static.
Customised stud length available for a minimum of 100 pieces.

P902ESD

+135° -30° | PA6 +G.F. | RoHS COMPLIANT

16

MOUNTING FOOT WITH GROUND FIXING - IN ESD MATERIAL - WITH STEEL ARTICULATED STEM TYPE A - BALL 15

Piedi plastica con fissaggio - stelo snodato

Notes: This item is made from ESD-C (Electro Static Discharge – Conductive) material with fillers in compliance with standards EN IEC 61340-5-1. The product is conductive and prevents the formation of electrostatic discharges by facilitating its grounding. A yellow pad-printed symbol (ESD-C) enables correct identification of the product. Product suitable for the production of electronic material and for use in explosive atmospheres.

Materials:

Reinforced polyamide, with conductive fillers (ESD-C).

Resistant to oils and greases.

Surface finish:

Satin.

Colour:

Black (RAL 9011).

Inserts:

P902ESD:

Galvanised steel threaded and articulated stem (ball 15) with hexagonal base (thread tolerance 6g).

P902CINESD:

Stainless steel threaded and articulated stem (ball 15) with hexagonal base (Aisi 303) (thread tolerance 6g).

Ground fixing:

The mounting foot is supplied with closed holes for anchoring to the ground. To open them pierce the plastic membrane (see drawing).

Special requests:

Upon request and for special quantities inserts can be supplied with customised lengths.

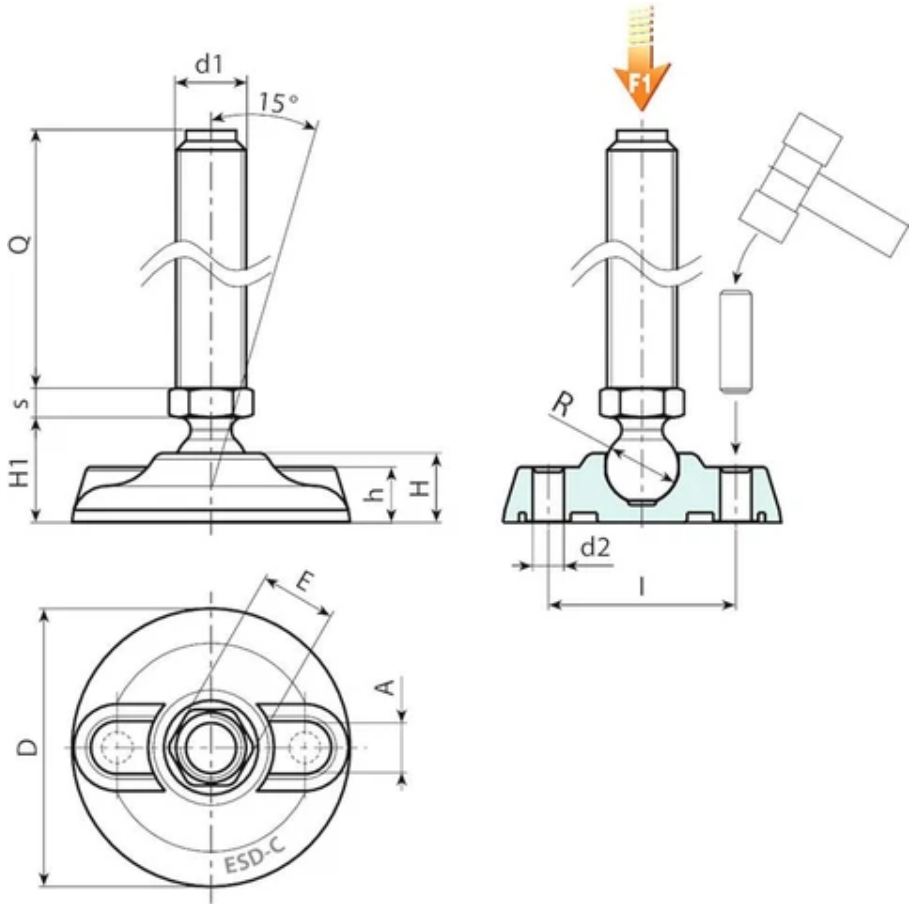

Version P902ESD: Mounting foot with stem type A (with hexagonal base) and ball 15

Code	Art.	D	H	l	H1	h	A	E	s	d2	R	d1 6g	Q	Weight (g)	F1 (kN)
P902080.0052	P902080.TM12X5001ESD	80	20	54	25.5	16	20	16	6.5	9	15	M12	50	117	13
P902080.0053	P902080.TM12X7001ESD	80	20	54	25.5	16	20	16	6.5	9	15	M12	70	130	13
P902080.0054	P902080.TM12X9001ESD	80	20	54	25.5	16	20	16	6.5	9	15	M12	90	143	13
P902080.0055	P902080.TM12X11001ESD	80	20	54	25.5	16	20	16	6.5	9	15	M12	110	156	13
P902080.0056	P902080.TM14X5001ESD	80	20	54	25.5	16	20	16	6.5	9	15	M14	50	126	13
P902080.0057	P902080.TM14X7001ESD	80	20	54	25.5	16	20	16	6.5	9	15	M14	70	145	13
P902080.0058	P902080.TM14X9001ESD	80	20	54	25.5	16	20	16	6.5	9	15	M14	90	163	13
P902080.0059	P902080.TM14X11001ESD	80	20	54	25.5	16	20	16	6.5	9	15	M14	110	181	13
P902080.0060	P902080.TM14X15001ESD	80	20	54	25.5	16	20	16	6.5	9	15	M14	150	217	13
P902080.0061	P902080.TM16X5001ESD	80	20	54	25.5	16	20	16	6.5	9	15	M16	50	139	13
P902080.0062	P902080.TM16X7001ESD	80	20	54	25.5	16	20	16	6.5	9	15	M16	70	166	13
P902080.0063	P902080.TM16X9001ESD	80	20	54	25.5	16	20	16	6.5	9	15	M16	90	193	13
P902080.0064	P902080.TM16X11001ESD	80	20	54	25.5	16	20	16	6.5	9	15	M16	110	220	13
P902080.0065	P902080.TM16X13001ESD	80	20	54	25.5	16	20	16	6.5	9	15	M16	130	247	13
P902080.0066	P902080.TM16X15001ESD	80	20	54	25.5	16	20	16	6.5	9	15	M16	150	274	13
P902080.0067	P902080.TM16X17001ESD	80	20	54	25.5	16	20	16	6.5	9	15	M16	170	301	13
P902080.0068	P902080.TM16X19001ESD	80	20	54	25.5	16	20	16	6.5	9	15	M16	190	328	13
P902105.0050	P902105.TM12X5001ESD	105	22	74	28	18.5	21	16	6.5	11	15	M12	50	167	15
P902105.0051	P902105.TM12X7001ESD	105	22	74	28	18.5	21	16	6.5	11	15	M12	70	180	15
P902105.0052	P902105.TM12X9001ESD	105	22	74	28	18.5	21	16	6.5	11	15	M12	90	193	15
P902105.0053	P902105.TM12X11001ESD	105	22	74	28	18.5	21	16	6.5	11	15	M12	110	206	15

Code	Art.	D	H	l	H1	h	A	E	s	d2	R	d1 6g	Q	Weight (g)	F1 (kN)
P902105.0054	P902105.TM14X5001ESD	105	22	74	28	18.5	21	16	6.5	11	15	M14	50	176	15
P902105.0055	P902105.TM14X7001ESD	105	22	74	28	18.5	21	16	6.5	11	15	M14	70	195	15
P902105.0056	P902105.TM14X9001ESD	105	22	74	28	18.5	21	16	6.5	11	15	M14	90	213	15
P902105.0057	P902105.TM14X11001ESD	105	22	74	28	18.5	21	16	6.5	11	15	M14	110	231	15
-	P902105.TM14X15001ESD	105	22	74	28	18.5	21	16	6.5	11	15	M14	150	268	15
-	P902105.TM16X5001ESD	105	22	74	28	18.5	21	16	6.5	11	15	M16	50	189	15
P902105.0058	P902105.TM16X7001ESD	105	22	74	28	18.5	21	16	6.5	11	15	M16	70	216	15
P902105.0059	P902105.TM16X9001ESD	105	22	74	28	18.5	21	16	6.5	11	15	M16	90	243	15
P902105.0060	P902105.TM16X11001ESD	105	22	74	28	18.5	21	16	6.5	11	15	M16	110	270	15
P902105.0061	P902105.TM16X13001ESD	105	22	74	28	18.5	21	16	6.5	11	15	M16	130	297	15
P902105.0062	P902105.TM16X15001ESD	105	22	74	28	18.5	21	16	6.5	11	15	M16	150	324	15
P902105.0063	P902105.TM16X17001ESD	105	22	74	28	18.5	21	16	6.5	11	15	M16	170	351	15
P902105.0064	P902105.TM16X19001ESD	105	22	74	28	18.5	21	16	6.5	11	15	M16	190	378	15
P902130.0042	P902130.TM12X5001ESD	130	24	99	30	20	21	16	6.5	13	15	M12	50	234	17
P902130.0043	P902130.TM12X7001ESD	130	24	99	30	20	21	16	6.5	13	15	M12	70	247	17
P902130.0044	P902130.TM12X9001ESD	130	24	99	30	20	21	16	6.5	13	15	M12	90	260	17
P902130.0045	P902130.TM12X11001ESD	130	24	99	30	20	21	16	6.5	13	15	M12	110	273	17
P902130.0046	P902130.TM14X5001ESD	130	24	99	30	20	21	16	6.5	13	15	M14	50	244	17
P902130.0047	P902130.TM14X7001ESD	130	24	99	30	20	21	16	6.5	13	15	M14	70	263	17
P902130.0048	P902130.TM14X9001ESD	130	24	99	30	20	21	16	6.5	13	15	M14	90	281	17
P902130.0049	P902130.TM14X11001ESD	130	24	99	30	20	21	16	6.5	13	15	M14	110	299	17
P902130.0050	P902130.TM14X15001ESD	130	24	99	30	20	21	16	6.5	13	15	M14	150	335	17
P902130.0051	P902130.TM16X5001ESD	130	24	99	30	20	21	16	6.5	13	15	M16	50	256	17
P902130.0052	P902130.TM16X7001ESD	130	24	99	30	20	21	16	6.5	13	15	M16	70	283	17
P902130.0053	P902130.TM16X9001ESD	130	24	99	30	20	21	16	6.5	13	15	M16	90	310	17
P902130.0054	P902130.TM16X11001ESD	130	24	99	30	20	21	16	6.5	13	15	M16	110	337	17
P902130.0055	P902130.TM16X13001ESD	130	24	99	30	20	21	16	6.5	13	15	M16	130	364	17
P902130.0056	P902130.TM16X15001ESD	130	24	99	30	20	21	16	6.5	13	15	M16	150	391	17
P902130.0057	P902130.TM16X17001ESD	130	24	99	30	20	21	16	6.5	13	15	M16	170	418	17
P902130.0058	P902130.TM16X19001ESD	130	24	99	30	20	21	16	6.5	13	15	M16	190	445	17

Attention: The expressed load limit F1 is lower than the break load by 30% and is intended as static.
Customised stud length available for a minimum of 100 pieces.

Version P902CINESD: Mounting foot with stem type A - stainless steel - (with hexagonal base) and ball 15

Code	Art.	D	H	l	H1	h	A	E	s	d2	R	d1 6g	Q	Weight (g)	F1 (kN)
P902080.0069	P902080.TM12X7001CINESD	80	20	54	25.5	16	20	16	6.5	9	15	M12	70	130	13
P902080.0070	P902080.TM12X9001CINESD	80	20	54	25.5	16	20	16	6.5	9	15	M12	90	143	13
P902080.0071	P902080.TM12X11001CINESD	80	20	54	25.5	16	20	16	6.5	9	15	M12	110	156	13
P902080.0072	P902080.TM14X7001CINESD	80	20	54	25.5	16	20	16	6.5	9	15	M14	70	145	13
P902080.0073	P902080.TM14X11001CINESD	80	20	54	25.5	16	20	16	6.5	9	15	M14	110	163	13

Code	Art.	D	H	l	H1	h	A	E	s	d2	R	d1 6g	Q	Weight (g)	F1 (kN)
P902080.0074	P902080.TM14X13001CINESD	80	20	54	25.5	16	20	16	6.5	9	15	M14	130	181	13
P902080.0075	P902080.TM16X5001CINESD	80	20	54	25.5	16	20	16	6.5	9	15	M16	50	139	13
P902080.0076	P902080.TM16X7001CINESD	80	20	54	25.5	16	20	16	6.5	9	15	M16	70	166	13
P902080.0077	P902080.TM16X9001CINESD	80	20	54	25.5	16	20	16	6.5	9	15	M16	90	193	13
P902080.0078	P902080.TM16X11001CINESD	80	20	54	25.5	16	20	16	6.5	9	15	M16	110	220	13
P902080.0079	P902080.TM16X13001CINESD	80	20	54	25.5	16	20	16	6.5	9	15	M16	130	247	13
P902080.0080	P902080.TM16X15001CINESD	80	20	54	25.5	16	20	16	6.5	9	15	M16	150	274	13
P902080.0081	P902080.TM16X17001CINESD	80	20	54	25.5	16	20	16	6.5	9	15	M16	170	301	13
P902080.0082	P902080.TM16X19001CINESD	80	20	54	25.5	16	20	16	6.5	9	15	M16	190	328	13
P902105.0065	P902105.TM12X7001CINESD	105	22	74	28	18.5	21	16	6.5	11	15	M12	70	180	15
P902105.0066	P902105.TM12X9001CINESD	105	22	74	28	18.5	21	16	6.5	11	15	M12	90	193	15
P902105.0067	P902105.TM12X11001CINESD	105	22	74	28	18.5	21	16	6.5	11	15	M12	110	206	15
P902105.0068	P902105.TM14X7001CINESD	105	22	74	28	18.5	21	16	6.5	11	15	M14	70	195	15
P902105.0069	P902105.TM14X11001CINESD	105	22	74	28	18.5	21	16	6.5	11	15	M14	110	231	15
P902105.0070	P902105.TM14X13001CINESD	105	22	74	28	18.5	21	16	6.5	11	15	M14	130	249	15
P902105.0071	P902105.TM16X5001CINESD	105	22	74	28	18.5	21	16	6.5	11	15	M16	50	189	15
P902105.0072	P902105.TM16X7001CINESD	105	22	74	28	18.5	21	16	6.5	11	15	M16	70	216	15
P902105.0073	P902105.TM16X9001CINESD	105	22	74	28	18.5	21	16	6.5	11	15	M16	90	243	15
P902105.0074	P902105.TM16X11001CINESD	105	22	74	28	18.5	21	16	6.5	11	15	M16	110	270	15
P902105.0075	P902105.TM16X13001CINESD	105	22	74	28	18.5	21	16	6.5	11	15	M16	130	297	15
P902105.0076	P902105.TM16X15001CINESD	105	22	74	28	18.5	21	16	6.5	11	15	M16	150	324	15
P902105.0077	P902105.TM16X17001CINESD	105	22	74	28	18.5	21	16	6.5	11	15	M16	170	351	15
P902105.0078	P902105.TM16X19001CINESD	105	22	74	28	18.5	21	16	6.5	11	15	M16	190	378	15
P902130.0059	P902130.TM12X7001CINESD	130	24	99	30	20	21	16	6.5	13	15	M12	70	247	17
P902130.0060	P902130.TM12X9001CINESD	130	24	99	30	20	21	16	6.5	13	15	M12	90	260	17
P902130.0061	P902130.TM12X11001CINESD	130	24	99	30	20	21	16	6.5	13	15	M12	110	273	17
P902130.0062	P902130.TM14X7001CINESD	130	24	99	30	20	21	16	6.5	13	15	M14	70	263	17
P902130.0063	P902130.TM14X11001CINESD	130	24	99	30	20	21	16	6.5	13	15	M14	110	299	17
P902130.0064	P902130.TM14X13001CINESD	130	24	99	30	20	21	16	6.5	13	15	M14	130	317	17
P902130.0065	P902130.TM16X5001CINESD	130	24	99	30	20	21	16	6.5	13	15	M16	50	256	17
P902130.0066	P902130.TM16X7001CINESD	130	24	99	30	20	21	16	6.5	13	15	M16	70	283	17
P902130.0067	P902130.TM16X9001CINESD	130	24	99	30	20	21	16	6.5	13	15	M16	90	310	17
P902130.0068	P902130.TM16X11001CINESD	130	24	99	30	20	21	16	6.5	13	15	M16	110	337	17
P902130.0069	P902130.TM16X13001CINESD	130	24	99	30	20	21	16	6.5	13	15	M16	130	364	17
P902130.0070	P902130.TM16X15001CINESD	130	24	99	30	20	21	16	6.5	13	15	M16	150	391	17
P902130.0071	P902130.TM16X17001CINESD	130	24	99	30	20	21	16	6.5	13	15	M16	170	418	17
P902130.0072	P902130.TM16X19001CINESD	130	24	99	30	20	21	16	6.5	13	15	M16	190	445	17

Attention: The expressed load limit F1 is lower than the break load by 30% and is intended as static.
Customised stud length available for a minimum of 100 pieces.

P903

+135° -30° | PA6 +G.F. | SBS | RoHS COMPLIANT

16 MOUNTING FOOT WITH GROUND FIXING AND STEEL ARTICULATED STEM TYPE A - BALL 15 AND NON-SLIP BASE

Piedi plastica con fissaggio - stelo snodato+antiscivolo

Materials:

Reinforced polyamide. Resistant to oils and greases.

Surface finish:

Satin.

Colour:

Black (RAL 9011).

Inserts:

P903:

Galvanised steel threaded and articulated stem (ball 15) with hexagonal base (thread tolerance 6g).

P903CIN:

Stainless steel threaded and articulated stem (ball 15) with hexagonal base (Aisi 303) (thread tolerance 6g).

Non-slip base:

Non-slip base in thermoplastic rubber SBS 75 Shore, black RAL 9011. Resistant to oils and greases. Push-fit assembly.

Ground fixing:

The mounting foot is supplied with closed holes for anchoring to the ground. To open them pierce the plastic membrane (see drawing).

Special requests:

Upon request and for special quantities inserts can be supplied with customised lengths.

Upon request and for special quantities the foot can be supplied in Orange (RAL 2004).

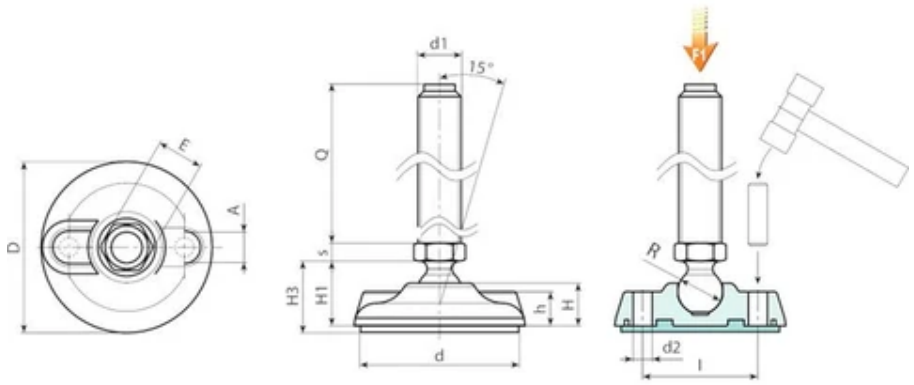

Version P903: Mounting foot with stem type A (with hexagonal base) and ball 15 - with SBS non-slip base

Code	Art.	D	H	l	H1	H3	h	A	E	s	d2	d	R	d1 6g	Q	Weight (g)	F1 (kN)
P903080.0010	P903080.TM12X5001	80	20	54	25.5	28.5	16	20	16	6.5	9	75	15	M12	50	142	13
P903080.0012	P903080.TM12X7001	80	20	54	25.5	28.5	16	20	16	6.5	9	75	15	M12	70	155	13
P903080.0014	P903080.TM12X9001	80	20	54	25.5	28.5	16	20	16	6.5	9	75	15	M12	90	168	13
P903080.0002	P903080.TM12X11001	80	20	54	25.5	28.5	16	20	16	6.5	9	75	15	M12	110	181	13
P903080.0031	P903080.TM14X5001	80	20	54	25.5	28.5	16	20	16	6.5	9	75	15	M14	50	151	13
P903080.0032	P903080.TM14X7001	80	20	54	25.5	28.5	16	20	16	6.5	9	75	15	M14	70	170	13
P903080.0033	P903080.TM14X9001	80	20	54	25.5	28.5	16	20	16	6.5	9	75	15	M14	90	188	13
P903080.0021	P903080.TM14X11001	80	20	54	25.5	28.5	16	20	16	6.5	9	75	15	M14	110	206	13
P903080.0027	P903080.TM14X15001	80	20	54	25.5	28.5	16	20	16	6.5	9	75	15	M14	150	242	13
P903080.0047	P903080.TM16X5001	80	20	54	25.5	28.5	16	20	16	6.5	9	75	15	M16	50	164	13
P903080.0049	P903080.TM16X7001	80	20	54	25.5	28.5	16	20	16	6.5	9	75	15	M16	70	191	13
P903080.0052	P903080.TM16X9001	80	20	54	25.5	28.5	16	20	16	6.5	9	75	15	M16	90	218	13
P903080.0034	P903080.TM16X11001	80	20	54	25.5	28.5	16	20	16	6.5	9	75	15	M16	110	245	13
P903080.0036	P903080.TM16X13001	80	20	54	25.5	28.5	16	20	16	6.5	9	75	15	M16	130	272	13
P903080.0038	P903080.TM16X15001	80	20	54	25.5	28.5	16	20	16	6.5	9	75	15	M16	150	299	13
P903080.0040	P903080.TM16X17001	80	20	54	25.5	28.5	16	20	16	6.5	9	75	15	M16	170	326	13
P903080.0042	P903080.TM16X19001	80	20	54	25.5	28.5	16	20	16	6.5	9	75	15	M16	190	353	13
P903105.0007	P903105.TM12X5001	105	22	74	28	32	18.5	21	16	6.5	11	101	15	M12	50	236	15
P903105.0009	P903105.TM12X7001	105	22	74	28	32	18.5	21	16	6.5	11	101	15	M12	70	249	15
P903105.0011	P903105.TM12X9001	105	22	74	28	32	18.5	21	16	6.5	11	101	15	M12	90	262	15
P903105.0001	P903105.TM12X11001	105	22	74	28	32	18.5	21	16	6.5	11	101	15	M12	110	275	15

Code	Art.	D	H	I	H1	H3	h	A	E	s	d2	d	R	d1 6g	Q	Weight (g)	F1 (kN)
P903105.0021	P903105.TM14X5001	105	22	74	28	32	18.5	21	16	6.5	11	101	15	M14	50	245	15
P903105.0023	P903105.TM14X7001	105	22	74	28	32	18.5	21	16	6.5	11	101	15	M14	70	264	15
P903105.0025	P903105.TM14X9001	105	22	74	28	32	18.5	21	16	6.5	11	101	15	M14	90	282	15
P903105.0014	P903105.TM14X11001	105	22	74	28	32	18.5	21	16	6.5	11	101	15	M14	110	300	15
P903105.0019	P903105.TM14X15001	105	22	74	28	32	18.5	21	16	6.5	11	101	15	M14	150	337	15
P903105.0038	P903105.TM16X5001	105	22	74	28	32	18.5	21	16	6.5	11	101	15	M16	50	258	15
P903105.0040	P903105.TM16X7001	105	22	74	28	32	18.5	21	16	6.5	11	101	15	M16	70	285	15
P903105.0042	P903105.TM16X9001	105	22	74	28	32	18.5	21	16	6.5	11	101	15	M16	90	312	15
P903105.0027	P903105.TM16X11001	105	22	74	28	32	18.5	21	16	6.5	11	101	15	M16	110	339	15
P903105.0029	P903105.TM16X13001	105	22	74	28	32	18.5	21	16	6.5	11	101	15	M16	130	366	15
P903105.0031	P903105.TM16X15001	105	22	74	28	32	18.5	21	16	6.5	11	101	15	M16	150	393	15
P903105.0034	P903105.TM16X17001	105	22	74	28	32	18.5	21	16	6.5	11	101	15	M16	170	420	15
P903105.0036	P903105.TM16X19001	105	22	74	28	32	18.5	21	16	6.5	11	101	15	M16	190	447	15
P903130.0008	P903130.TM12X5001	130	24	99	30	35	20	21	16	6.5	13	126	15	M12	50	346	17
P903130.0009	P903130.TM12X7001	130	24	99	30	35	20	21	16	6.5	13	126	15	M12	70	359	17
P903130.0010	P903130.TM12X9001	130	24	99	30	35	20	21	16	6.5	13	126	15	M12	90	372	17
P903130.0004	P903130.TM12X11001	130	24	99	30	35	20	21	16	6.5	13	126	15	M12	110	385	17
P903130.0020	P903130.TM14X5001	130	24	99	30	35	20	21	16	6.5	13	126	15	M14	50	356	17
P903130.0021	P903130.TM14X7001	130	24	99	30	35	20	21	16	6.5	13	126	15	M14	70	375	17
P903130.0022	P903130.TM14X9001	130	24	99	30	35	20	21	16	6.5	13	126	15	M14	90	393	17
P903130.0015	P903130.TM14X11001	130	24	99	30	35	20	21	16	6.5	13	126	15	M14	110	411	17
P903130.0018	P903130.TM14X15001	130	24	99	30	35	20	21	16	6.5	13	126	15	M14	150	447	17
P903130.0033	P903130.TM16X5001	130	24	99	30	35	20	21	16	6.5	13	126	15	M16	50	368	17
P903130.0035	P903130.TM16X7001	130	24	99	30	35	20	21	16	6.5	13	126	15	M16	70	395	17
P903130.0037	P903130.TM16X9001	130	24	99	30	35	20	21	16	6.5	13	126	15	M16	90	422	17
P903130.0023	P903130.TM16X11001	130	24	99	30	35	20	21	16	6.5	13	126	15	M16	110	450	17
P903130.0025	P903130.TM16X13001	130	24	99	30	35	20	21	16	6.5	13	126	15	M16	130	477	17
P903130.0027	P903130.TM16X15001	130	24	99	30	35	20	21	16	6.5	13	126	15	M16	150	504	17
P903130.0029	P903130.TM16X17001	130	24	99	30	35	20	21	16	6.5	13	126	15	M16	170	531	17
P903130.0031	P903130.TM16X19001	130	24	99	30	35	20	21	16	6.5	13	126	15	M16	190	558	17

Attention: The expressed load limit F1 is lower than the break load by 30% and is intended as static.
Customised stud length available for a minimum of 100 pieces.

Version P903CIN: Mounting foot with stem type A - stainless steel - (with hexagonal base) and ball 15 - with SBS non-slip base

Code	Art.	D	H	I	H1	H3	h	A	E	s	d2	d	R	d1 6g	Q	Weight (g)	F1 (kN)
P903080.0013	P903080.TM12X7001CIN	80	20	54	25.5	28.5	16	20	16	6.5	9	75	15	M12	70	155	13
P903080.0015	P903080.TM12X9001CIN	80	20	54	25.5	28.5	16	20	16	6.5	9	75	15	M12	90	168	13
P903080.0003	P903080.TM12X11001CIN	80	20	54	25.5	28.5	16	20	16	6.5	9	75	15	M12	110	181	13
P903080.0018	P903080.TM14X07001CIN	80	20	54	25.5	28.5	16	20	16	6.5	9	75	15	M14	70	170	13

Code	Art.	D	H	I	H1	H3	h	A	E	s	d2	d	R	d1 6g	Q	Weight (g)	F1 (kN)
P903080.0022	P903080.TM14X11001CIN	80	20	54	25.5	28.5	16	20	16	6.5	9	75	15	M14	110	206	13
P903080.0026	P903080.TM14X13001CIN	80	20	54	25.5	28.5	16	20	16	6.5	9	75	15	M14	130	224	13
P903080.0048	P903080.TM16X5001CIN	80	20	54	25.5	28.5	16	20	16	6.5	9	75	15	M16	50	164	13
P903080.0050	P903080.TM16X7001CIN	80	20	54	25.5	28.5	16	20	16	6.5	9	75	15	M16	70	191	13
P903080.0053	P903080.TM16X9001CIN	80	20	54	25.5	28.5	16	20	16	6.5	9	75	15	M16	90	218	13
P903080.0035	P903080.TM16X11001CIN	80	20	54	25.5	28.5	16	20	16	6.5	9	75	15	M16	110	245	13
P903080.0037	P903080.TM16X13001CIN	80	20	54	25.5	28.5	16	20	16	6.5	9	75	15	M16	130	272	13
P903080.0039	P903080.TM16X15001CIN	80	20	54	25.5	28.5	16	20	16	6.5	9	75	15	M16	150	299	13
P903080.0041	P903080.TM16X17001CIN	80	20	54	25.5	28.5	16	20	16	6.5	9	75	15	M16	170	326	13
P903080.0043	P903080.TM16X19001CIN	80	20	54	25.5	28.5	16	20	16	6.5	9	75	15	M16	190	353	13
P903105.0010	P903105.TM12X7001CIN	105	22	74	28	32	18.5	21	16	6.5	11	101	15	M12	70	249	15
P903105.0012	P903105.TM12X9001CIN	105	22	74	28	32	18.5	21	16	6.5	11	101	15	M12	90	262	15
P903105.0002	P903105.TM12X11001CIN	105	22	74	28	32	18.5	21	16	6.5	11	101	15	M12	110	275	15
P903105.0024	P903105.TM14X7001CIN	105	22	74	28	32	18.5	21	16	6.5	11	101	15	M14	70	264	15
P903105.0045	P903105.TM14X11001CIN	105	22	74	28	32	18.5	21	16	6.5	11	101	15	M14	110	300	15
P903105.0018	P903105.TM14X13001CIN	105	22	74	28	32	18.5	21	16	6.5	11	101	15	M14	130	318	15
P903105.0039	P903105.TM16X5001CIN	105	22	74	28	32	18.5	21	16	6.5	11	101	15	M16	50	258	15
P903105.0041	P903105.TM16X7001CIN	105	22	74	28	32	18.5	21	16	6.5	11	101	15	M16	70	285	15
P903105.0043	P903105.TM16X9001CIN	105	22	74	28	32	18.5	21	16	6.5	11	101	15	M16	90	312	15
P903105.0028	P903105.TM16X11001CIN	105	22	74	28	32	18.5	21	16	6.5	11	101	15	M16	110	339	15
P903105.0030	P903105.TM16X13001CIN	105	22	74	28	32	18.5	21	16	6.5	11	101	15	M16	130	366	15
P903105.0032	P903105.TM16X15001CIN	105	22	74	28	32	18.5	21	16	6.5	11	101	15	M16	150	393	15
P903105.0035	P903105.TM16X17001CIN	105	22	74	28	32	18.5	21	16	6.5	11	101	15	M16	170	420	15
P903105.0037	P903105.TM16X19001CIN	105	22	74	28	32	18.5	21	16	6.5	11	101	15	M16	190	447	15
P903130.0002	P903130.TM12X7001CIN	130	24	99	30	35	20	21	16	6.5	13	126	15	M12	70	359	17
P903130.0003	P903130.TM12X9001CIN	130	24	99	30	35	20	21	16	6.5	13	126	15	M12	90	372	17
P903130.0005	P903130.TM12X11001CIN	130	24	99	30	35	20	21	16	6.5	13	126	15	M12	110	385	17
P903130.0012	P903130.TM14X7001CIN	130	24	99	30	35	20	21	16	6.5	13	126	15	M14	70	375	17
P903130.0016	P903130.TM14X11001CIN	130	24	99	30	35	20	21	16	6.5	13	126	15	M14	110	411	17
P903130.0017	P903130.TM14X13001CIN	130	24	99	30	35	20	21	16	6.5	13	126	15	M14	130	429	17
P903130.0034	P903130.TM16X5001CIN	130	24	99	30	35	20	21	16	6.5	13	126	15	M16	50	368	17
P903130.0036	P903130.TM16X7001CIN	130	24	99	30	35	20	21	16	6.5	13	126	15	M16	70	395	17
P903130.0038	P903130.TM16X9001CIN	130	24	99	30	35	20	21	16	6.5	13	126	15	M16	90	422	17
P903130.0024	P903130.TM16X11001CIN	130	24	99	30	35	20	21	16	6.5	13	126	15	M16	110	450	17
P903130.0026	P903130.TM16X13001CIN	130	24	99	30	35	20	21	16	6.5	13	126	15	M16	130	477	17
P903130.0028	P903130.TM16X15001CIN	130	24	99	30	35	20	21	16	6.5	13	126	15	M16	150	504	17
P903130.0030	P903130.TM16X17001CIN	130	24	99	30	35	20	21	16	6.5	13	126	15	M16	170	531	17
P903130.0042	P903130.TM16X19001CIN	130	24	99	30	35	20	21	16	6.5	13	126	15	M16	190	558	17

Attention: The expressed load limit F1 is lower than the break load by 30% and is intended as static.
Customised stud length available for a minimum of 100 pieces.

P905

+135° -30° | PA6 +G.F. | RoHS COMPLIANT

16

SMALL MOUNTING FOOT WITH STEEL ARTICULATED STEM TYPE A - BALL 15

Piedi in plastica - stelo snodato

Materials:

Reinforced polyamide.

Resistant to oils and greases.

Surface finish:

Satin.

Colour:

Black (RAL 9011).

Inserts:

Version P905:

Galvanised steel threaded and articulated stem (ball 15) with hexagonal base (thread tolerance 6g).

Version P905CIN:

Stainless steel threaded and articulated stem (ball 15) with hexagonal base (Aisi 303) (thread tolerance 6g).

Special requests:

Upon request and for special quantities inserts can be supplied with customised lengths.

Upon request and for special quantities the foot can be supplied in Orange (RAL 2004).

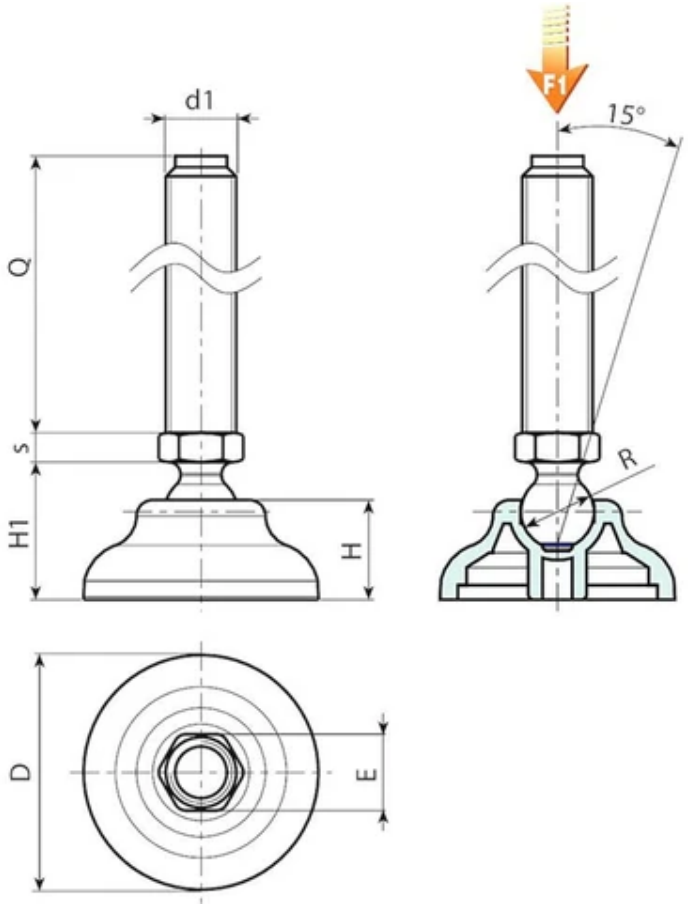

Version P905: Mounting foot with stem type A (with hexagonal base) and ball 15

Code	Art.	D	H	H1	E	s	R	d1 6g	Q	Weight (g)	F1 (kN)
P90540.0001	P90540.TM12X5001	40	17	23	16	6.5	15	M12	50	84	13
P90540.0003	P90540.TM12X7001	40	17	23	16	6.5	15	M12	70	97	13
P90540.0005	P90540.TM12X9001	40	17	23	16	6.5	15	M12	90	110	13
P90540.0007	P90540.TM12X11001	40	17	23	16	6.5	15	M12	110	123	13
P90540.0009	P90540.TM14X5001	40	17	23	16	6.5	15	M14	50	112	13
P90540.0011	P90540.TM14X7001	40	17	23	16	6.5	15	M14	70	136	13
P90540.0013	P90540.TM14X9001	40	17	23	16	6.5	15	M14	90	171	13
P90540.0015	P90540.TM14X11001	40	17	23	16	6.5	15	M14	110	184	13
P90540.0017	P90540.TM14X15001	40	17	23	16	6.5	15	M14	150	210	13
P90540.0019	P90540.TM16X5001	40	17	23	16	6.5	15	M16	50	131	13
P90540.0021	P90540.TM16X7001	40	17	23	16	6.5	15	M16	70	163	13
P90540.0023	P90540.TM16X9001	40	17	23	16	6.5	15	M16	90	195	13
P90540.0026	P90540.TM16X11001	40	17	23	16	6.5	15	M16	110	227	13
P90540.0028	P90540.TM16X13001	40	17	23	16	6.5	15	M16	130	259	13
P90540.0030	P90540.TM16X15001	40	17	23	16	6.5	15	M16	150	295	13
P90540.0032	P90540.TM16X17001	40	17	23	16	6.5	15	M16	170	323	13
P90540.0034	P90540.TM16X19001	40	17	23	16	6.5	15	M16	190	365	13
P90550.0001	P90550.TM12X5001	50	18	24	16	6.5	15	M12	50	88	13
P90550.0003	P90550.TM12X7001	50	18	24	16	6.5	15	M12	70	101	13
P90550.0005	P90550.TM12X9001	50	18	24	16	6.5	15	M12	90	114	13
P90550.0007	P90550.TM12X11001	50	18	24	16	6.5	15	M12	110	127	13

Code	Art.	D	H	H1	E	s	R	d1 6g	Q	Weight (g)	F1 (kN)
P90550.0009	P90550.TM14X5001	50	18	24	16	6.5	15	M14	50	97	13
P90550.0011	P90550.TM14X7001	50	18	24	16	6.5	15	M14	70	116	13
P90550.0013	P90550.TM14X9001	50	18	24	16	6.5	15	M14	90	134	13
P90550.0015	P90550.TM14X11001	50	18	24	16	6.5	15	M14	110	152	13
P90550.0017	P90550.TM14X15001	50	18	24	16	6.5	15	M14	150	189	13
P90550.0019	P90550.TM16X5001	50	18	24	16	6.5	15	M16	50	110	13
P90550.0021	P90550.TM16X7001	50	18	24	16	6.5	15	M16	70	137	13
P90550.0023	P90550.TM16X9001	50	18	24	16	6.5	15	M16	90	164	13
P90550.0025	P90550.TM16X11001	50	18	24	16	6.5	15	M16	110	191	13
P90550.0027	P90550.TM16X13001	50	18	24	16	6.5	15	M16	130	218	13
P90550.0029	P90550.TM16X15001	50	18	24	16	6.5	15	M16	150	245	13
P90550.0031	P90550.TM16X17001	50	18	24	16	6.5	15	M16	170	272	13
P90550.0033	P90550.TM16X19001	50	18	24	16	6.5	15	M16	190	299	13
P90560.0007	P90560.TM12X5001	60	20	26	16	6.5	15	M12	50	96	13
P90560.0009	P90560.TM12X7001	60	20	26	16	6.5	15	M12	70	109	13
P90560.0011	P90560.TM12X9001	60	20	26	16	6.5	15	M12	90	122	13
P90560.0001	P90560.TM12X11001	60	20	26	16	6.5	15	M12	110	135	13
P90560.0018	P90560.TM14X5001	60	20	26	16	6.5	15	M14	50	105	13
P90560.0020	P90560.TM14X7001	60	20	26	16	6.5	15	M14	70	124	13
P90560.0022	P90560.TM14X9001	60	20	26	16	6.5	15	M14	90	142	13
P90560.0013	P90560.TM14X11001	60	20	26	16	6.5	15	M14	110	160	13
P90560.0016	P90560.TM14X15001	60	20	26	16	6.5	15	M14	150	197	13
P90560.0035	P90560.TM16X5001	60	20	26	16	6.5	15	M16	50	118	13
P90560.0037	P90560.TM16X7001	60	20	26	16	6.5	15	M16	70	145	13
P90560.0039	P90560.TM16X9001	60	20	26	16	6.5	15	M16	90	172	13
P90560.0025	P90560.TM16X11001	60	20	26	16	6.5	15	M16	110	199	13
P90560.0027	P90560.TM16X13001	60	20	26	16	6.5	15	M16	130	226	13
P90560.0029	P90560.TM16X15001	60	20	26	16	6.5	15	M16	150	253	13
P90560.0031	P90560.TM16X17001	60	20	26	16	6.5	15	M16	170	280	13
P90560.0033	P90560.TM16X19001	60	20	26	16	6.5	15	M16	190	307	13

Attention: The expressed load limit F1 is lower than the break load by 30% and is intended as static.
Customised stud length available for a minimum of 100 pieces.

Version P905CIN: Mounting foot with stem type A (with hexagonal base) and ball 15 - stainless steel

Code	Art.	D	H	H1	E	s	R	d1 6g	Q	Weight (g)	F1 (kN)
P90540.0004	P90540.TM12X7001CIN	40	17	23	16	6.5	15	M12	70	97	13
P90540.0006	P90540.TM12X9001CIN	40	17	23	16	6.5	15	M12	90	110	13
P90540.0008	P90540.TM12X11001CIN	40	17	23	16	6.5	15	M12	110	121	13
P90540.0012	P90540.TM14X7001CIN	40	17	23	16	6.5	15	M14	70	112	13
P90540.0066	P90540.TM14X13001CIN	40	17	23	16	6.5	15	M14	130	165	13

Code	Art.	D	H	H1	E	s	R	d1 6g	Q	Weight (g)	F1 (kN)
P90540.0020	P90540.TM16X5001CIN	40	17	23	16	6.5	15	M16	50	106	13
P90540.0022	P90540.TM16X7001CIN	40	17	23	16	6.5	15	M16	70	133	13
P90540.0024	P90540.TM16X9001CIN	40	17	23	16	6.5	15	M16	90	160	13
P90540.0027	P90540.TM16X11001CIN	40	17	23	16	6.5	15	M16	110	187	13
P90540.0029	P90540.TM16X13001CIN	40	17	23	16	6.5	15	M16	130	211	13
P90540.0031	P90540.TM16X15001CIN	40	17	23	16	6.5	15	M16	150	240	13
P90540.0033	P90540.TM16X17001CIN	40	17	23	16	6.5	15	M16	170	268	13
P90540.0035	P90540.TM16X19001CIN	40	17	23	16	6.5	15	M16	190	295	13
P90550.0004	P90550.TM12X7001CIN	50	18	24	16	6.5	15	M12	70	101	13
P90550.0006	P90550.TM12X9001CIN	50	18	24	16	6.5	15	M12	90	114	13
P90550.0008	P90550.TM12X11001CIN	50	18	24	16	6.5	15	M12	110	125	13
P90550.0012	P90550.TM14X7001CIN	50	18	24	16	6.5	15	M14	70	116	13
P90550.0065	P90550.TM14X13001CIN	50	18	24	16	6.5	15	M14	130	170	13
P90550.0020	P90550.TM16X5001CIN	50	18	24	16	6.5	15	M16	50	110	13
P90550.0022	P90550.TM16X7001CIN	50	18	24	16	6.5	15	M16	70	137	13
P90550.0024	P90550.TM16X9001CIN	50	18	24	16	6.5	15	M16	90	164	13
P90550.0026	P90550.TM16X11001CIN	50	18	24	16	6.5	15	M16	110	191	13
P90550.0028	P90550.TM16X13001CIN	50	18	24	16	6.5	15	M16	130	215	13
P90550.0030	P90550.TM16X15001CIN	50	18	24	16	6.5	15	M16	150	245	13
P90550.0032	P90550.TM16X17001CIN	50	18	24	16	6.5	15	M16	170	272	13
P90550.0034	P90550.TM16X19001CIN	50	18	24	16	6.5	15	M16	190	299	13
P90560.0010	P90560.TM12X7001CIN	60	20	26	16	6.5	15	M12	70	109	13
P90560.0012	P90560.TM12X9001CIN	60	20	26	16	6.5	15	M12	90	122	13
P90560.0002	P90560.TM12X11001CIN	60	20	26	16	6.5	15	M12	110	133	13
P90560.0021	P90560.TM14X7001CIN	60	20	26	16	6.5	15	M14	70	124	13
P90560.0015	P90560.TM14X13001CIN	60	20	26	16	6.5	15	M14	130	178	13
P90560.0036	P90560.TM16X5001CIN	60	20	26	16	6.5	15	M16	50	118	13
P90560.0038	P90560.TM16X7001CIN	60	20	26	16	6.5	15	M16	70	145	13
P90560.0040	P90560.TM16X9001CIN	60	20	26	16	6.5	15	M16	90	172	13
P90560.0026	P90560.TM16X11001CIN	60	20	26	16	6.5	15	M16	110	199	13
P90560.0028	P90560.TM16X13001CIN	60	20	26	16	6.5	15	M16	130	226	13
P90560.0030	P90560.TM16X15001CIN	60	20	26	16	6.5	15	M16	150	253	13
P90560.0032	P90560.TM16X17001CIN	60	20	26	16	6.5	15	M16	170	280	13
P90560.0034	P90560.TM16X19001CIN	60	20	26	16	6.5	15	M16	190	307	13

Attention: The expressed load limit F1 is lower than the break load by 30% and is intended as static.
Customised stud length available for a minimum of 100 pieces.

P905ESD

+135° -30° | PA6 +G.F. | RoHS COMPLIANT

16

SMALL MOUNTING FOOT - IN ESD MATERIAL - WITH STEEL ARTICULATED STEM TYPE A - BALL 15

Piedi in plastica - stelo snodato

Notes: This item is made from ESD-C (Electro Static Discharge – Conductive) material with fillers in compliance with standards EN IEC 61340-5-1. The product is conductive and prevents the formation of electrostatic discharges by facilitating its grounding. A yellow pad-printed symbol (ESD-C) enables correct identification of the product. Product suitable for the production of electronic material and for use in explosive atmospheres.

Materials:

Reinforced polyamide, with conductive fillers (ESD-C).

Resistant to oils and greases.

Surface finish:

Satin.

Colour:

Black (RAL 9011).

Inserts:

P905ESD:

Galvanised steel threaded and articulated stem (ball 15) with hexagonal base (thread tolerance 6g).

P905CINESD:

Stainless steel threaded and articulated stem (ball 15) with hexagonal base (Aisi 303) (thread tolerance 6g).

Special requests:

Upon request and for special quantities inserts can be supplied with customised lengths.

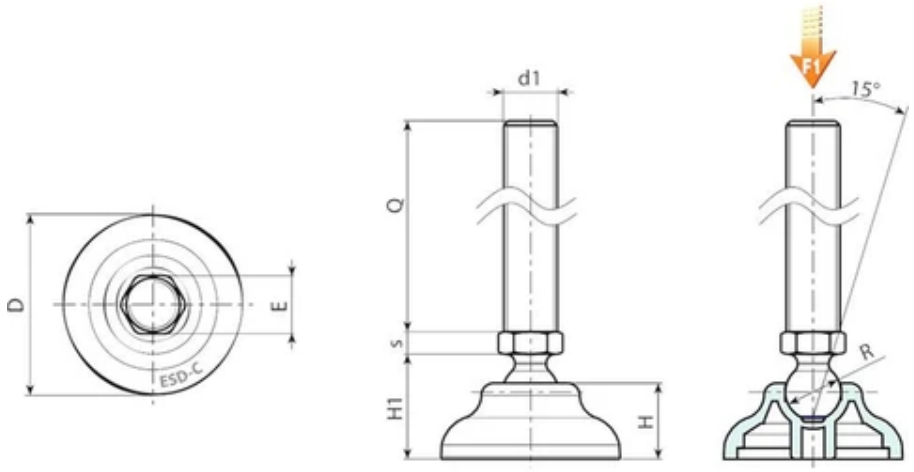

Version P905ESD: Mounting foot with stem type A (with hexagonal base) and ball 15

Code	Art.	D	H	H1	E	s	R	d1 6g	Q	Weight (g)	F1 (kN)
P90540.0036	P90540.TM12X5001ESD	40	17	23	16	6.5	15	M12	50	84	13
P90540.0037	P90540.TM12X7001ESD	40	17	23	16	6.5	15	M12	70	97	13
P90540.0038	P90540.TM12X9001ESD	40	17	23	16	6.5	15	M12	90	110	13
P90540.0039	P90540.TM12X11001ESD	40	17	23	16	6.5	15	M12	110	123	13
P90540.0040	P90540.TM14X5001ESD	40	17	23	16	6.5	15	M14	50	112	13
P90540.0041	P90540.TM14X7001ESD	40	17	23	16	6.5	15	M14	70	136	13
P90540.0042	P90540.TM14X9001ESD	40	17	23	16	6.5	15	M14	90	171	13
P90540.0043	P90540.TM14X11001ESD	40	17	23	16	6.5	15	M14	110	184	13
P90540.0044	P90540.TM14X15001ESD	40	17	23	16	6.5	15	M14	150	210	13
P90540.0045	P90540.TM16X5001ESD	40	17	23	16	6.5	15	M16	50	131	13
P90540.0046	P90540.TM16X7001ESD	40	17	23	16	6.5	15	M16	70	163	13
P90540.0047	P90540.TM16X9001ESD	40	17	23	16	6.5	15	M16	90	195	13
P90540.0048	P90540.TM16X11001ESD	40	17	23	16	6.5	15	M16	110	227	13
P90540.0049	P90540.TM16X13001ESD	40	17	23	16	6.5	15	M16	130	259	13
P90540.0050	P90540.TM16X15001ESD	40	17	23	16	6.5	15	M16	150	295	13
P90540.0051	P90540.TM16X17001ESD	40	17	23	16	6.5	15	M16	170	323	13
P90540.0052	P90540.TM16X19001ESD	40	17	23	16	6.5	15	M16	190	365	13
P90550.0035	P90550.TM12X5001ESD	50	18	24	16	6.5	15	M12	50	88	13
P90550.0036	P90550.TM12X7001ESD	50	18	24	16	6.5	15	M12	70	101	13
P90550.0037	P90550.TM12X9001ESD	50	18	24	16	6.5	15	M12	90	114	13
P90550.0038	P90550.TM12X11001ESD	50	18	24	16	6.5	15	M12	110	127	13

Code	Art.	D	H	H1	E	s	R	d1 6g	Q	Weight (g)	F1 (kN)
P90550.0039	P90550.TM14X5001ESD	50	18	24	16	6.5	15	M14	50	97	13
P90550.0040	P90550.TM14X7001ESD	50	18	24	16	6.5	15	M14	70	116	13
P90550.0041	P90550.TM14X9001ESD	50	18	24	16	6.5	15	M14	90	134	13
P90550.0042	P90550.TM14X11001ESD	50	18	24	16	6.5	15	M14	110	152	13
P90550.0043	P90550.TM14X15001ESD	50	18	24	16	6.5	15	M14	150	189	13
P90550.0044	P90550.TM16X5001ESD	50	18	24	16	6.5	15	M16	50	110	13
P90550.0045	P90550.TM16X7001ESD	50	18	24	16	6.5	15	M16	70	137	13
P90550.0046	P90550.TM16X9001ESD	50	18	24	16	6.5	15	M16	90	164	13
P90550.0047	P90550.TM16X11001ESD	50	18	24	16	6.5	15	M16	110	191	13
P90550.0048	P90550.TM16X13001ESD	50	18	24	16	6.5	15	M16	130	218	13
P90550.0049	P90550.TM16X15001ESD	50	18	24	16	6.5	15	M16	150	245	13
P90550.0050	P90550.TM16X17001ESD	50	18	24	16	6.5	15	M16	170	272	13
P90550.0051	P90550.TM16X19001ESD	50	18	24	16	6.5	15	M16	190	299	13
P90560.0041	P90560.TM12X5001ESD	60	20	26	16	6.5	15	M12	50	96	13
P90560.0042	P90560.TM12X7001ESD	60	20	26	16	6.5	15	M12	70	109	13
P90560.0043	P90560.TM12X9001ESD	60	20	26	16	6.5	15	M12	90	122	13
P90560.0044	P90560.TM12X11001ESD	60	20	26	16	6.5	15	M12	110	135	13
P90560.0045	P90560.TM14X5001ESD	60	20	26	16	6.5	15	M14	50	105	13
P90560.0046	P90560.TM14X7001ESD	60	20	26	16	6.5	15	M14	70	124	13
P90560.0047	P90560.TM14X9001ESD	60	20	26	16	6.5	15	M14	90	142	13
P90560.0048	P90560.TM14X11001ESD	60	20	26	16	6.5	15	M14	110	160	13
P90560.0049	P90560.TM14X15001ESD	60	20	26	16	6.5	15	M14	150	197	13
P90560.0050	P90560.TM16X5001ESD	60	20	26	16	6.5	15	M16	50	118	13
P90560.0051	P90560.TM16X7001ESD	60	20	26	16	6.5	15	M16	70	145	13
P90560.0052	P90560.TM16X9001ESD	60	20	26	16	6.5	15	M16	90	172	13
P90560.0053	P90560.TM16X11001ESD	60	20	26	16	6.5	15	M16	110	199	13
P90560.0054	P90560.TM16X13001ESD	60	20	26	16	6.5	15	M16	130	226	13
P90560.0055	P90560.TM16X15001ESD	60	20	26	16	6.5	15	M16	150	253	13
P90560.0056	P90560.TM16X17001ESD	60	20	26	16	6.5	15	M16	170	280	13
P90560.0057	P90560.TM16X19001ESD	60	20	26	16	6.5	15	M16	190	307	13

Attention: The expressed load limit F1 is lower than the break load by 30% and is intended as static.
Customised stud length available for a minimum of 100 pieces.

Version P905CINESD: Mounting foot with stem type A (with hexagonal base) and ball 15 - stainless steel

Code	Art.	D	H	H1	E	s	R	d1 6g	Q	Weight (g)	F1 (kN)
P90540.0053	P90540.TM12X7001CINESD	40	17	23	16	6.5	15	M12	70	97	13
P90540.0054	P90540.TM12X9001CINESD	40	17	23	16	6.5	15	M12	90	110	13
P90540.0055	P90540.TM12X11001CINESD	40	17	23	16	6.5	15	M12	110	121	13
P90540.0056	P90540.TM14X7001CINESD	40	17	23	16	6.5	15	M14	70	112	13
P90540.0067	P90540.TM14X11001CINESD	40	17	23	16	6.5	15	M14	110	148	13

Code	Art.	D	H	H1	E	s	R	d1 6g	Q	Weight (g)	F1 (kN)
P90540.0057	P90540.TM14X13001CINESD	40	17	23	16	6.5	15	M14	130	165	13
P90540.0058	P90540.TM16X5001CINESD	40	17	23	16	6.5	15	M16	50	106	13
P90540.0059	P90540.TM16X7001CINESD	40	17	23	16	6.5	15	M16	70	133	13
P90540.0060	P90540.TM16X9001CINESD	40	17	23	16	6.5	15	M16	90	160	13
P90540.0061	P90540.TM16X11001CINESD	40	17	23	16	6.5	15	M16	110	187	13
P90540.0062	P90540.TM16X13001CINESD	40	17	23	16	6.5	15	M16	130	211	13
P90540.0063	P90540.TM16X15001CINESD	40	17	23	16	6.5	15	M16	150	240	13
P90540.0064	P90540.TM16X17001CINESD	40	17	23	16	6.5	15	M16	170	268	13
P90540.0065	P90540.TM16X19001CINESD	40	17	23	16	6.5	15	M16	190	295	13
P90550.0052	P90550.TM12X7001CINESD	50	18	24	16	6.5	15	M12	70	101	13
P90550.0053	P90550.TM12X9001CINESD	50	18	24	16	6.5	15	M12	90	114	13
P90550.0054	P90550.TM12X11001CINESD	50	18	24	16	6.5	15	M12	110	125	13
P90550.0055	P90550.TM14X7001CINESD	50	18	24	16	6.5	15	M14	70	116	13
P90550.0056	P90550.TM14X13001CINESD	50	18	24	16	6.5	15	M14	130	170	13
P90550.0057	P90550.TM16X5001CINESD	50	18	24	16	6.5	15	M16	50	110	13
P90550.0058	P90550.TM16X7001CINESD	50	18	24	16	6.5	15	M16	70	137	13
P90550.0059	P90550.TM16X9001CINESD	50	18	24	16	6.5	15	M16	90	164	13
P90550.0060	P90550.TM16X11001CINESD	50	18	24	16	6.5	15	M16	110	191	13
P90550.0061	P90550.TM16X13001CINESD	50	18	24	16	6.5	15	M16	130	215	13
P90550.0062	P90550.TM16X15001CINESD	50	18	24	16	6.5	15	M16	150	245	13
P90550.0063	P90550.TM16X17001CINESD	50	18	24	16	6.5	15	M16	170	272	13
P90550.0064	P90550.TM16X19001CINESD	50	18	24	16	6.5	15	M16	190	299	13
P90560.0058	P90560.TM12X7001CINESD	60	20	26	16	6.5	15	M12	70	109	13
P90560.0059	P90560.TM12X9001CINESD	60	20	26	16	6.5	15	M12	90	122	13
P90560.0060	P90560.TM12X11001CINESD	60	20	26	16	6.5	15	M12	110	133	13
P90560.0061	P90560.TM14X7001CINESD	60	20	26	16	6.5	15	M14	70	124	13
P90560.0062	P90560.TM14X13001CINESD	60	20	26	16	6.5	15	M14	130	178	13
P90560.0063	P90560.TM16X5001CINESD	60	20	26	16	6.5	15	M16	50	118	13
P90560.0064	P90560.TM16X7001CINESD	60	20	26	16	6.5	15	M16	70	145	13
P90560.0065	P90560.TM16X9001CINESD	60	20	26	16	6.5	15	M16	90	172	13
P90560.0066	P90560.TM16X11001CINESD	60	20	26	16	6.5	15	M16	110	199	13
P90560.0067	P90560.TM16X13001CINESD	60	20	26	16	6.5	15	M16	130	226	13
P90560.0068	P90560.TM16X15001CINESD	60	20	26	16	6.5	15	M16	150	253	13
P90560.0069	P90560.TM16X17001CINESD	60	20	26	16	6.5	15	M16	170	280	13
P90560.0070	P90560.TM16X19001CINESD	60	20	26	16	6.5	15	M16	190	307	13

Attention: The expressed load limit F1 is lower than the break load by 30% and is intended as static.
Customised stud length available for a minimum of 100 pieces.

P906

+135° -30° | PA6 +G.F. | RoHS COMPLIANT

16 SMALL MOUNTING FOOT WITH STEEL ARTICULATED STEM TYPE B - BALL 12.4

Piedi in plastica - stelo snodato

Materials:

Reinforced polyamide.

Resistant to oils and greases.

Surface finish:

Satin.

Colour:

Black (RAL 9011).

Inserts:

Galvanised steel threaded and articulated stem (ball 12.4) with milled seat for wrench (type B) (thread tolerance 6g).

Special requests:

Upon request and for special quantities inserts can be supplied with customised lengths.

Upon request and for special quantities the foot can be supplied in Orange (RAL 2004).

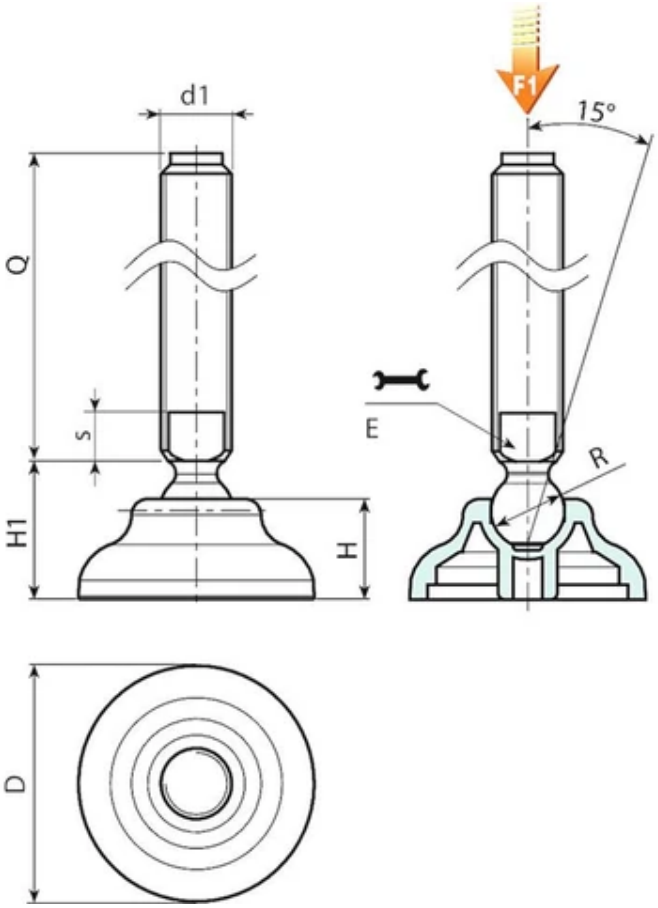

Version P906: Mounting foot with stem type B (with milled seat for wrench) and ball 12.4

Code	Art.	D	H	H1	E	s	R	d1 6g	Q	Weight (g)	F1 (kN)
P90660.0005	P90660.TM16X7001	60	20	26	13	7	12.4	M16	70	126	10
P90660.0006	P90660.TM16X9001	60	20	26	13	7	12.4	M16	90	152	10
P90660.0001	P90660.TM16X11001	60	20	26	13	7	12.4	M16	110	178	10
P90660.0002	P90660.TM16X13001	60	20	26	13	7	12.4	M16	130	204	10
P90660.0003	P90660.TM16X15001	60	20	26	13	7	12.4	M16	150	230	10
P90660.0004	P90660.TM16X17001	60	20	26	13	7	12.4	M16	170	256	10

Attention: The expressed load limit F1 is lower than the break load by 30% and is intended as static.
Customised stud length available for a minimum of 100 pieces.

P907

+135° -30° | PA6 +G.F. | RoHS COMPLIANT

16 SMALL MOUNTING FOOT WITH STEEL ARTICULATED STEM TYPE B - BALL 15

Piedi in plastica - stelo snodato

Materials:

Reinforced polyamide.

Resistant to oils and greases.

Surface finish:

Satin.

Colour:

Black (RAL 9011).

Inserts:

Galvanised steel threaded and articulated stem (ball 15) with milled seat for wrench (type B) (thread tolerance 6g).

Special requests:

Upon request and for special quantities inserts can be supplied with customised lengths.

Upon request and for special quantities the foot can be supplied in Orange (RAL 2004).

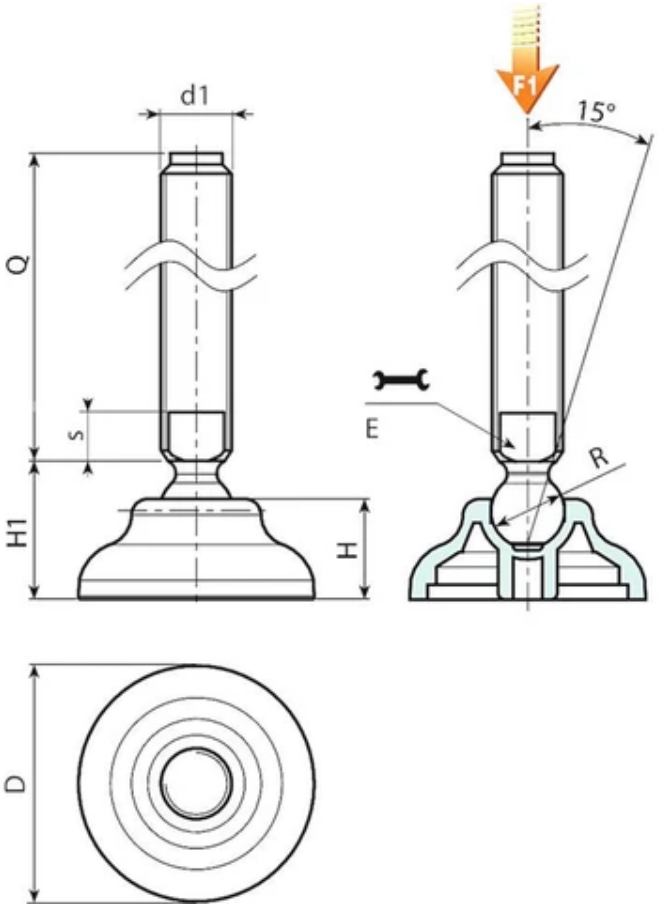

Version P907: Mounting foot with stem type B (with milled seat for wrench) and ball 15

Code	Art.	D	H	H1	E	s	R	d1 6g	Q	Weight (g)	F1 (kN)
P90760.0007	P90760.TM20X5001	60	20	26	16	7	15	M20	50	145	13
P90760.0008	P90760.TM20X7001	60	20	26	16	7	15	M20	70	185	13
P90760.0009	P90760.TM20X9001	60	20	26	16	7	15	M20	90	225	13
P90760.0001	P90760.TM20X11001	60	20	26	16	7	15	M20	110	267	13
P90760.0002	P90760.TM20X13001	60	20	26	16	7	15	M20	130	306	13
P90760.0003	P90760.TM20X15001	60	20	26	16	7	15	M20	150	346	13
P90760.0004	P90760.TM20X17001	60	20	26	16	7	15	M20	170	386	13
P90760.0005	P90760.TM20X19001	60	20	26	16	7	15	M20	190	426	13
P90760.0006	P90760.TM20X21001	60	20	26	16	7	15	M20	210	466	13

Attention: The expressed load limit F1 is lower than the break load by 30% and is intended as static.
Customised stud length available for a minimum of 100 pieces.

P908

+135° -30° | PA6 +G.F. | SBS | RoHS COMPLIANT

16

SMALL MOUNTING FOOT WITH STEEL STEM TYPE A - BALL 15 AND NON-SLIP BASE

Piedi plastica - stelo snodato + antiscivolo

Materials:

Reinforced polyamide. Resistant to oils and greases.

Surface finish:

Satin.

Colour:

Black (RAL 9011).

Inserts:

Version P908:

Galvanised steel threaded and articulated stem (ball 15) with hexagonal base (thread tolerance 6g).

Version P908CIN:

Stainless steel threaded and articulated stem (ball 15) with hexagonal base (Aisi 303) (thread tolerance 6g).

Non-slip base:

Non-slip base in thermoplastic rubber SBS 75 Shore, black RAL 9011. Resistant to oils and greases.

Special requests:

Upon request and for special quantities inserts can be supplied with customised lengths.

Upon request and for special quantities the foot can be supplied in Orange (RAL 2004).

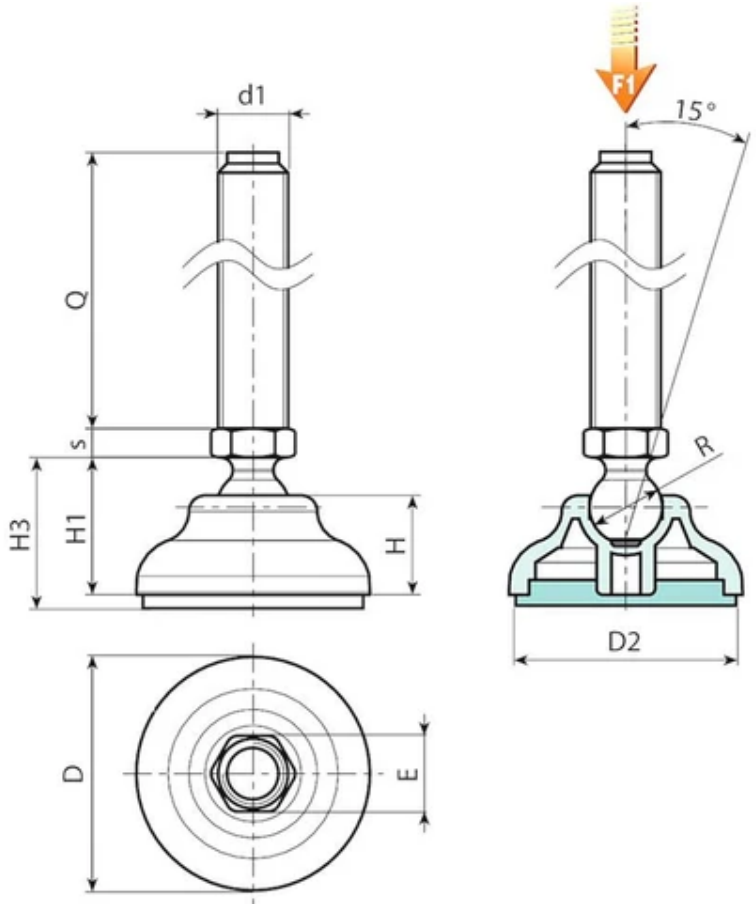

Version P908: Mounting foot with stem type A (with hexagonal base) and ball 15 - with SBS non-slip base

Code	Art.	D	D2	H	H1	H3	E	s	R	d1 6g	Q	Weight (g)	F1 (kN)
P90840.0001	P90840.TM12X5001	40	34	17	23	26	16	6.5	15	M12	50	80	13
P90840.0005	P90840.TM12X7001	40	34	17	23	26	16	6.5	15	M12	70	93	13
P90840.0005	P90840.TM12X9001	40	34	17	23	26	16	6.5	15	M12	90	106	13
P90840.0007	P90840.TM12X11001	40	34	17	23	26	16	6.5	15	M12	110	119	13
P90840.0009	P90840.TM14X5001	40	34	17	23	26	16	6.5	15	M14	50	95	13
P90840.0011	P90840.TM14X7001	40	34	17	23	26	16	6.5	15	M14	70	119	13
P90840.0013	P90840.TM14X9001	40	34	17	23	26	16	6.5	15	M14	90	154	13
P90840.0015	P90840.TM14X11001	40	34	17	23	26	16	6.5	15	M14	110	167	13
P90840.0035	P90840.TM14X13001	40	34	17	23	26	16	6.5	15	M14	130	180	13
P90840.0017	P90840.TM14X15001	40	34	17	23	26	16	6.5	15	M14	150	193	13
P90840.0019	P90840.TM16X5001	40	34	17	23	26	16	6.5	15	M16	50	114	13
P90840.0021	P90840.TM16X7001	40	34	17	23	26	16	6.5	15	M16	70	146	13
P90840.0023	P90840.TM16X9001	40	34	17	23	26	16	6.5	15	M16	90	178	13
P90840.0025	P90840.TM16X11001	40	34	17	23	26	16	6.5	15	M16	110	210	13
P90840.0027	P90840.TM16X13001	40	34	17	23	26	16	6.5	15	M16	130	242	13
P90840.0029	P90840.TM16X15001	40	34	17	23	26	16	6.5	15	M16	150	274	13
P90840.0031	P90840.TM16X17001	40	34	17	23	26	16	6.5	15	M16	170	306	13
P90840.0033	P90840.TM16X19001	40	34	17	23	26	16	6.5	15	M16	190	348	13
P90850.0001	P90850.TM12X5001	50	43	18	24	27	16	6.5	15	M12	50	86	13
P90850.0003	P90850.TM12X7001	50	43	18	24	27	16	6.5	15	M12	70	99	13
P90850.0005	P90850.TM12X9001	50	43	18	24	27	16	6.5	15	M12	90	112	13

Code	Art.	D	D2	H	H1	H3	E	s	R	d1 6g	Q	Weight (g)	F1 (kN)
P90850.0007	P90850.TM12X11001	50	43	18	24	27	16	6.5	15	M12	110	125	13
P90850.0009	P90850.TM14X5001	50	43	18	24	27	16	6.5	15	M14	50	101	13
P90850.0011	P90850.TM14X7001	50	43	18	24	27	16	6.5	15	M14	70	125	13
P90850.0013	P90850.TM14X9001	50	43	18	24	27	16	6.5	15	M14	90	160	13
P90850.0015	P90850.TM14X11001	50	43	18	24	27	16	6.5	15	M14	110	173	13
P90850.0036	P90850.TM14X13001	50	43	18	24	27	16	6.5	15	M14	130	186	13
P90850.0017	P90850.TM14X15001	50	43	18	24	27	16	6.5	15	M14	150	199	13
P90850.0019	P90850.TM16X5001	50	43	18	24	27	16	6.5	15	M16	50	120	13
P90850.0021	P90850.TM16X7001	50	43	18	24	27	16	6.5	15	M16	70	152	13
P90850.0023	P90850.TM16X9001	50	43	18	24	27	16	6.5	15	M16	90	184	13
P90850.0025	P90850.TM16X11001	50	43	18	24	27	16	6.5	15	M16	110	216	13
P90850.0027	P90850.TM16X13001	50	43	18	24	27	16	6.5	15	M16	130	248	13
P90850.0029	P90850.TM16X15001	50	43	18	24	27	16	6.5	15	M16	150	280	13
P90850.0031	P90850.TM16X17001	50	43	18	24	27	16	6.5	15	M16	170	312	13
P90850.0033	P90850.TM16X19001	50	43	18	24	27	16	6.5	15	M16	190	354	13
P90860.0008	P90860.TM12X5001	60	53	20	26	29	16	6.5	15	M12	50	109	13
P90860.0010	P90860.TM12X7001	60	53	20	26	29	16	6.5	15	M12	70	122	13
P90860.0012	P90860.TM12X9001	60	53	20	26	29	16	6.5	15	M12	90	135	13
P90860.0001	P90860.TM12X11001	60	53	20	26	29	16	6.5	15	M12	110	148	13
P90860.0024	P90860.TM14X5001	60	53	20	26	29	16	6.5	15	M14	50	124	13
P90860.0025	P90860.TM14X7001	60	53	20	26	29	16	6.5	15	M14	70	148	13
P90860.0026	P90860.TM14X9001	60	53	20	26	29	16	6.5	15	M14	90	183	13
P90860.0018	P90860.TM14X11001	60	53	20	26	29	16	6.5	15	M14	110	196	13
P90860.0022	P90860.TM14X15001	60	53	20	26	29	16	6.5	15	M14	150	222	13
P90860.0039	P90860.TM16X5001	60	53	20	26	29	16	6.5	15	M16	50	143	13
P90860.0041	P90860.TM16X7001	60	53	20	26	29	16	6.5	15	M16	70	175	13
P90860.0043	P90860.TM16X9001	60	53	20	26	29	16	6.5	15	M16	90	207	13
P90860.0027	P90860.TM16X11001	60	53	20	26	29	16	6.5	15	M16	110	239	13
P90860.0030	P90860.TM16X13001	60	53	20	26	29	16	6.5	15	M16	130	271	13
P90860.0032	P90860.TM16X15001	60	53	20	26	29	16	6.5	15	M16	150	303	13
P90860.0035	P90860.TM16X17001	60	53	20	26	29	16	6.5	15	M16	170	335	13
P90860.0037	P90860.TM16X19001	60	53	20	26	29	16	6.5	15	M16	190	377	13

Attention: The expressed load limit F1 is lower than the break load by 30% and is intended as static.
Customised stud length available for a minimum of 100 pieces.

Version P908CIN: Foot with stem type A (with hexagonal base) - ball 15 - stainless steel - with SBS non-slip base

Code	Art.	D	D2	H	H1	H3	E	s	R	d1 6g	Q	Weight (g)	F1 (kN)
P90840.0004	P90840.TM12X7001CIN	40	34	17	23	26	16	6.5	15	M12	70	93	13
P90840.0005	P90840.TM12X9001CIN	40	34	17	23	26	16	6.5	15	M12	90	106	13
P90840.0008	P90840.TM12X11001CIN	40	34	17	23	26	16	6.5	15	M12	110	119	13

Code	Art.	D	D2	H	H1	H3	E	s	R	d1 6g	Q	Weight (g)	F1 (kN)
P90840.0010	P90840.TM14X5001CIN	40	34	17	23	26	16	6.5	15	M14	50	95	13
P90840.0012	P90840.TM14X7001CIN	40	34	17	23	26	16	6.5	15	M14	70	119	13
P90840.0016	P90840.TM14X11001CIN	40	34	17	23	26	16	6.5	15	M14	110	167	13
P90840.0036	P90840.TM14X13001CIN	40	34	17	23	26	16	6.5	15	M14	130	180	13
P90840.0018	P90840.TM14X15001CIN	40	34	17	23	26	16	6.5	15	M14	150	193	13
P90840.0020	P90840.TM16X5001CIN	40	34	17	23	26	16	6.5	15	M16	50	114	13
P90840.0022	P90840.TM16X7001CIN	40	34	17	23	26	16	6.5	15	M16	70	146	13
P90840.0024	P90840.TM16X9001CIN	40	34	17	23	26	16	6.5	15	M16	90	178	13
P90840.0026	P90840.TM16X11001CIN	40	34	17	23	26	16	6.5	15	M16	110	210	13
P90840.0028	P90840.TM16X13001CIN	40	34	17	23	26	16	6.5	15	M16	130	242	13
P90840.0030	P90840.TM16X15001CIN	40	34	17	23	26	16	6.5	15	M16	150	274	13
P90840.0032	P90840.TM16X17001CIN	40	34	17	23	26	16	6.5	15	M16	170	306	13
P90840.0034	P90840.TM16X19001CIN	40	34	17	23	26	16	6.5	15	M16	190	348	13
P90850.0004	P90850.TM12X7001CIN	50	43	18	24	27	16	6.5	15	M12	70	99	13
P90850.0006	P90850.TM12X9001CIN	50	43	18	24	27	16	6.5	15	M12	90	12	13
P90850.0008	P90850.TM12X11001CIN	50	43	18	24	27	16	6.5	15	M12	110	125	13
P90850.0012	P90850.TM14X7001CIN	50	43	18	24	27	16	6.5	15	M14	70	125	13
P90850.0016	P90850.TM14X11001CIN	50	43	18	24	27	16	6.5	15	M14	110	173	13
P90850.0035	P90850.TM14X13001CIN	50	43	18	24	27	16	6.5	15	M14	130	186	13
P90850.0020	P90850.TM16X5001CIN	50	43	18	24	27	16	6.5	15	M16	50	120	13
P90850.0022	P90850.TM16X7001CIN	50	43	18	24	27	16	6.5	15	M16	70	152	13
P90850.0024	P90850.TM16X9001CIN	50	43	18	24	27	16	6.5	15	M16	90	184	13
P90850.0026	P90850.TM16X11001CIN	50	43	18	24	27	16	6.5	15	M16	110	216	13
P90850.0028	P90850.TM16X13001CIN	50	43	18	24	27	16	6.5	15	M16	130	248	13
P90850.0030	P90850.TM16X15001CIN	50	43	18	24	27	16	6.5	15	M16	150	280	13
P90850.0032	P90850.TM16X17001CIN	50	43	18	24	27	16	6.5	15	M16	170	312	13
P90850.0034	P90850.TM16X19001CIN	50	43	18	24	27	16	6.5	15	M16	190	354	13
P90860.0011	P90860.TM12X7001CIN	60	53	20	26	29	16	6.5	15	M12	70	122	13
P90860.0013	P90860.TM12X9001CIN	60	53	20	26	29	16	6.5	15	M12	90	135	13
P90860.0002	P90860.TM12X11001CIN	60	53	20	26	29	16	6.5	15	M12	110	148	13
P90860.0016	P90860.TM14X7001CIN	60	53	20	26	29	16	6.5	15	M14	70	148	13
P90860.0019	P90860.TM14X11001CIN	60	53	20	26	29	16	6.5	15	M14	110	196	13
P90860.0021	P90860.TM14X13001CIN	60	53	20	26	29	16	6.5	15	M14	130	209	13
P90860.0040	P90860.TM16X5001CIN	60	53	20	26	29	16	6.5	15	M16	50	143	13
P90860.0042	P90860.TM16X7001CIN	60	53	20	26	29	16	6.5	15	M16	70	175	13
P90860.0044	P90860.TM16X9001CIN	60	53	20	26	29	16	6.5	15	M16	90	207	13
P90860.0028	P90860.TM16X11001CIN	60	53	20	26	29	16	6.5	15	M16	110	239	13
P90860.0031	P90860.TM16X13001CIN	60	53	20	26	29	16	6.5	15	M16	130	271	13
P90860.0033	P90860.TM16X15001CIN	60	53	20	26	29	16	6.5	15	M16	150	303	13
P90860.0036	P90860.TM16X17001CIN	60	53	20	26	29	16	6.5	15	M16	170	335	13

Code	Art.	D	D2	H	H1	H3	E	s	R	d1 6g	Q	Weight (g)	F1 (kN)
P90860.0038	P90860.TM16X19001CIN	60	53	20	26	29	16	6.5	15	M16	190	377	13

Attention: The expressed load limit F1 is lower than the break load by 30% and is intended as static.
Enter the selected stud length in place of the two dots . . in the item code. Customised stud length available for a minimum of 100 pieces.

P909

+135° -30° | PA6 +G.F. | SBS | RoHS COMPLIANT

16

SMALL MOUNTING FOOT WITH STEEL ARTICULATED STEM TYPE B - BALL 12.4 AND NON-SLIP BASE

Piedi plastica - stelo snodato + antiscivolo

Materials:

Reinforced polyamide. Resistant to oils and greases.

Surface finish:

Satin.

Colour:

Black (RAL 9011).

Inserts:

Galvanised steel threaded and articulated stem (ball 12.4) with milled seat for wrench (type B) (thread tolerance 6g).

Non-slip base:

Non-slip base in thermoplastic rubber SBS 75 Shore, black RAL 9011. Resistant to oils and greases.

Special requests:

Upon request and for special quantities inserts can be supplied with customised lengths.

Upon request and for special quantities the foot can be supplied in Orange (RAL 2004).

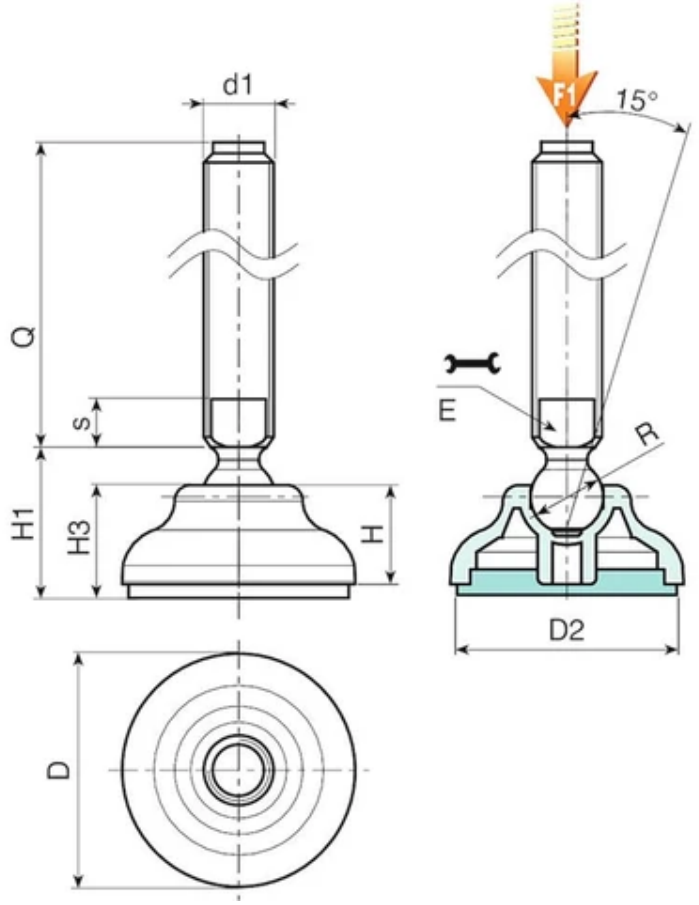

Version P909: Mounting foot with stem type B (with milled seat for wrench) and ball 12.4 - with SBS non-slip base

Code	Art.	D	D2	H	H1	H3	E	s	R	d1 6g	Q	Weight (g)	F1 k(N)
P90960.0005	P90960.TM16X7001	60	59	20	29	22	13	7	12,5	M16	70	139	13
P90960.0006	P90960.TM16X9001	60	59	20	29	22	13	7	12,5	M16	90	165	13
P90960.0001	P90960.TM16X11001	60	59	20	29	22	13	7	12,5	M16	110	191	13
P90960.0002	P90960.TM16X13001	60	59	20	29	22	13	7	12,5	M16	130	217	13
P90960.0003	P90960.TM16X15001	60	59	20	29	22	13	7	12,5	M16	150	243	13
P90960.0004	P90960.TM16X17001	60	59	20	29	22	13	7	12,5	M16	170	270	13

Attention: The expressed load limit F1 is lower than the break load by 30% and is intended as static.
Customised stud length available for a minimum of 100 pieces.

P910

+135° -30° | PA6 +G.F. | SBS | RoHS COMPLIANT

16

SMALL MOUNTING FOOT WITH STEEL ARTICULATED STEM TYPE B - BALL 15 AND NON-SLIP BASE

Piedi plastica - stelo snodato + antiscivolo

Materials:

Reinforced polyamide. Resistant to oils and greases.

Surface finish:

Satin.

Colour:

Black (RAL 9011).

Inserts:

Galvanised steel threaded and articulated stem (ball 15) with milled seat for wrench (type B) (thread tolerance 6g).

Non-slip base:

Non-slip base in thermoplastic rubber SBS 75 Shore, black RAL 9011. Resistant to oils and greases. Push-fit assembly.

Special requests:

Upon request and for special quantities inserts can be supplied with customised lengths.

Upon request and for special quantities the foot can be supplied in Orange (RAL 2004).

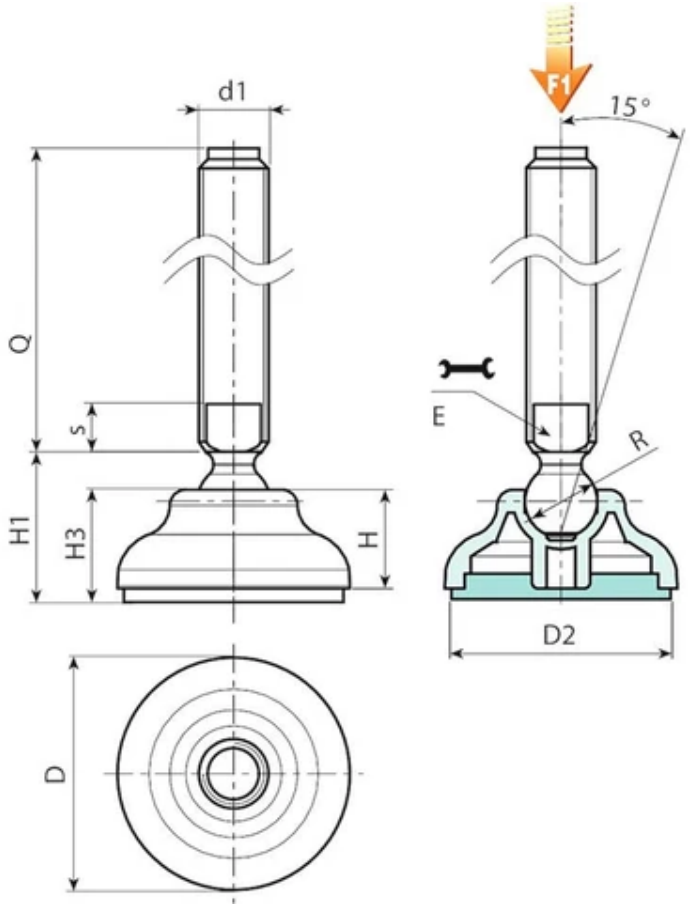

Version P910: Mounting foot with stem type B (with milled seat for wrench) and ball 15 - with SBS non-slip base

Code	Art.	D	D2	H	H1	H3	E	s	R	d1 6g	Q	Weight (g)	F1 (kN)
P91060.0007	P91060.TM20X5001	60	59	20	29	22	16	7	15	M20	50	158	13
P91060.0008	P91060.TM20X7001	60	59	20	29	22	16	7	15	M20	70	198	13
P91060.0009	P91060.TM20X9001	60	59	20	29	22	16	7	15	M20	90	238	13
P91060.0001	P91060.TM20X11001	60	59	20	29	22	16	7	15	M20	110	280	13
P91060.0002	P91060.TM20X13001	60	59	20	29	22	16	7	15	M20	130	320	13
P91060.0003	P91060.TM20X15001	60	59	20	29	22	16	7	15	M20	150	360	13
P91060.0004	P91060.TM20X17001	60	59	20	29	22	16	7	15	M20	170	400	13
P91060.0005	P91060.TM20X19001	60	59	20	29	22	16	7	15	M20	190	440	13
P91060.0006	P91060.TM20X21001	60	59	20	29	22	16	7	15	M20	210	480	13

Attention: The expressed load limit F1 is lower than the break load by 30% and is intended as static.
Customised stud length available for a minimum of 100 pieces.

P911

+135° -30° | PA6 +G.F. | RoHS COMPLIANT

16

MOUNTING FOOT WITH GROUND FIXING AND STEEL ARTICULATED STEM TYPE A - BALL 12.4

Piedi plastica con fissaggio - stelo snodato

Materials:

Reinforced polyamide. Resistant to oils and greases.

Surface finish:

Satin.

Colour:

Black (RAL 9011).

Inserts:

P911:

Galvanised steel threaded and articulated stem (ball 12.4) with hexagonal base (thread tolerance 6g).

P911CIN:

Stainless steel threaded and articulated stem (ball 12.4) with hexagonal base (Aisi 303) (thread tolerance 6g).

Ground fixing:

The mounting foot is supplied with closed holes for anchoring to the ground. To open them pierce the plastic membrane (see drawing).

Special requests:

Upon request and for special quantities inserts can be supplied with customised lengths.

Upon request and for special quantities the foot can be supplied in Orange (RAL 2004).

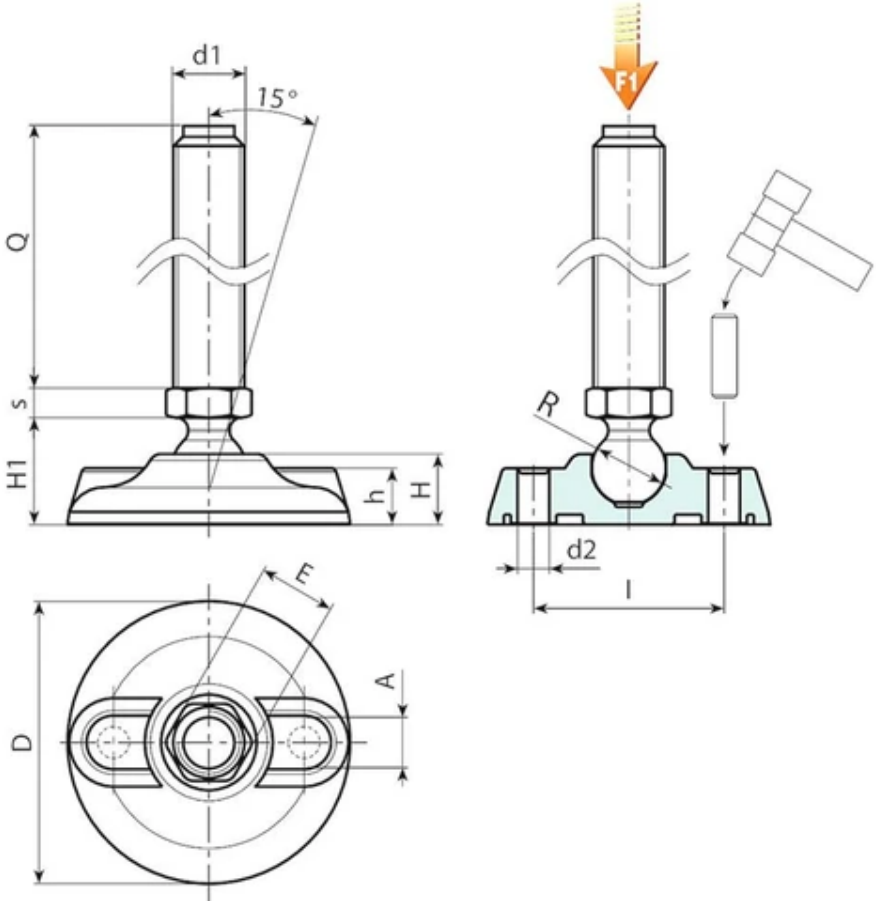

Version P911: Mounting foot with stem type A (with hexagonal base) and ball 12.4

Code	Art.	D	H	l	H1	h	A	E	s	d2	R	d1 6g	Q	Weight (g)	F1 (kN)
P911080.0001	P911080.TM08X4501	80	20	54	25.5	16	20	13	5	9	12.5	M8	45	66	10
P911080.0003	P911080.TM08X7001	80	20	54	25.5	16	20	13	5	9	12.5	M8	70	73	10
P911080.0010	P911080.TM10X4501	80	20	54	25.5	16	20	13	5	9	12.5	M10	45	74	10
P911080.0012	P911080.TM10X7001	80	20	54	25.5	16	20	13	5	9	12.5	M10	70	86	10
P911080.0005	P911080.TM10X10001	80	20	54	25.5	16	20	13	5	9	12.5	M10	100	123	10
P911080.0018	P911080.TM12X4501	80	20	54	25.5	16	20	13	5	9	12.5	M12	45	84	10
P911080.0021	P911080.TM12X7001	80	20	54	25.5	16	20	13	5	9	12.5	M12	70	101	10
P911080.0016	P911080.TM12X10001	80	20	54	25.5	16	20	13	5	9	12.5	M12	100	145	10

Attention: The expressed load limit F1 is lower than the break load by 30% and is intended as static.
Customised stud length available for a minimum of 100 pieces.

Version P911CIN: Mounting foot with stem type A (with hexagonal base) and ball 12.4 - stainless steel

Code	Art.	D	H	l	H1	h	A	E	s	d2	R	d1 6g	Q	Weight (g)	F1 (kN)
P911080.0002	P911080.TM08X4501CIN	80	20	54	25.5	16	20	13	5	9	12.5	M8	45	66	10
P911080.0004	P911080.TM08X7001CIN	80	20	54	25.5	16	20	13	5	9	12.5	M8	70	73	10
P911080.0011	P911080.TM10X4501CIN	80	20	54	25.5	16	20	13	5	9	12.5	M10	45	74	10
P911080.0013	P911080.TM10X7001CIN	80	20	54	25.5	16	20	13	5	9	12.5	M10	70	86	10
P911080.0019	P911080.TM12X4501CIN	80	20	54	25.5	16	20	13	5	9	12.5	M12	45	84	10
P911080.0022	P911080.TM12X7001CIN	80	20	54	25.5	16	20	13	5	9	12.5	M12	70	101	10
P911080.0017	P911080.TM12X10001CIN	80	20	54	25.5	16	20	13	5	9	12.5	M12	100	145	10

Attention: The expressed load limit F1 is lower than the break load by 30% and is intended as static.
Customised stud length available for a minimum of 100 pieces.

P911ESD

+135° -30° | PA6 +G.F. | RoHS COMPLIANT

16

MOUNTING FOOT WITH GROUND FIXING - IN ESD MATERIAL - WITH STEEL ARTICULATED STEM TYPE A - BALL 12.4

Piedi plastica con fissaggio - stelo snodato

Notes: This item is made from ESD-C (Electro Static Discharge – Conductive) material with fillers in compliance with standards EN IEC 61340-5-1. The product is conductive and prevents the formation of electrostatic discharges by facilitating its grounding. A yellow pad-printed symbol (ESD-C) enables correct identification of the product. Product suitable for the production of electronic material and for use in explosive atmospheres.

Materials:

Reinforced polyamide, with conductive fillers (ESD-C).

Resistant to oils and greases.

Surface finish:

Satin.

Colour:

Black (RAL 9011).

Inserts:

P911ESD:

Galvanised steel threaded and articulated stem (ball 12.4) with hexagonal base (thread tolerance 6g).

P911CINESD:

Stainless steel threaded and articulated stem (ball 12.4) with hexagonal base (Aisi 303) (thread tolerance 6g).

Ground fixing:

The mounting foot is supplied with closed holes for anchoring to the ground. To open them pierce the plastic membrane (see drawing).

Special requests:

Upon request and for special quantities inserts can be supplied with customised lengths.

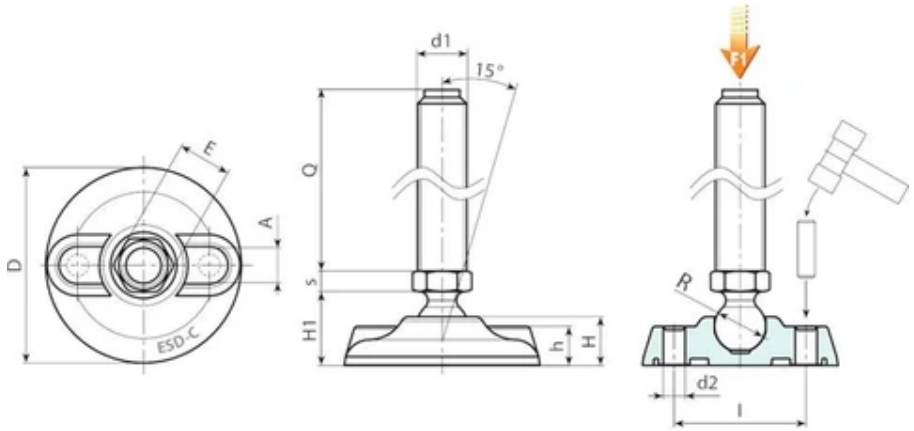

Version P911ESD: Mounting foot with stem type A (with hexagonal base) and ball 12.4

Code	Art.	D	H	l	H1	h	A	E	s	d2	R	d1 6g	Q	Weight (g)	F1 (kN)
P911080.0025	P911080.TM08X4501ESD	80	20	54	25.5	16	20	13	5	9	12.5	M8	45	66	10
P911080.0026	P911080.TM08X7001ESD	80	20	54	25.5	16	20	13	5	9	12.5	M8	70	73	10
P911080.0027	P911080.TM10X4501ESD	80	20	54	25.5	16	20	13	5	9	12.5	M10	45	74	10
P911080.0028	P911080.TM10X7001ESD	80	20	54	25.5	16	20	13	5	9	12.5	M10	70	86	10
P911080.0029	P911080.TM10X10001ESD	80	20	54	25.5	16	20	13	5	9	12.5	M10	100	123	10
P911080.0030	P911080.TM12X4501ESD	80	20	54	25.5	16	20	13	5	9	12.5	M12	45	84	10
P911080.0031	P911080.TM12X7001ESD	80	20	54	25.5	16	20	13	5	9	12.5	M12	70	101	10
P911080.0032	P911080.TM12X10001ESD	80	20	54	25.5	16	20	13	5	9	12.5	M12	100	145	10

Attention: The expressed load limit F1 is lower than the break load by 30% and is intended as static.
Customised stud length available for a minimum of 100 pieces.

Version P911CINESD: Mounting foot with stem type A - stainless steel - (with hexagonal base) and ball 12.4

Code	Art.	D	H	l	H1	h	A	E	s	d2	R	d1 6g	Q	Weight (g)	F1 (kN)
P911080.0033	P911080.TM08X4501CINESD	80	20	54	25.5	16	20	13	5	9	12.5	M8	45	66	10
P911080.0034	P911080.TM08X7001CINESD	80	20	54	25.5	16	20	13	5	9	12.5	M8	70	73	10
P911080.0035	P911080.TM10X4501CINESD	80	20	54	25.5	16	20	13	5	9	12.5	M10	45	74	10
P911080.0036	P911080.TM10X7001CINESD	80	20	54	25.5	16	20	13	5	9	12.5	M10	70	86	10
P911080.0037	P911080.TM12X4501CINESD	80	20	54	25.5	16	20	13	5	9	12.5	M12	45	84	10
P911080.0038	P911080.TM12X7001CINESD	80	20	54	25.5	16	20	13	5	9	12.5	M12	70	101	10
P911080.0039	P911080.TM12X10001CINESD	80	20	54	25.5	16	20	13	5	9	12.5	M12	100	145	10

Attention: The expressed load limit F1 is lower than the break load by 30% and is intended as static.
Customised stud length available for a minimum of 100 pieces.

P912

+135° -30° | PA6 +G.F. | RoHS COMPLIANT

16

MOUNTING FOOT WITH GROUND FIXING AND STEEL ARTICULATED STEM TYPE B - BALL 12.4

Piedi plastica con fissaggio - stelo snodato

Materials:

Reinforced polyamide. Resistant to oils and greases.

Surface finish:

Satin.

Colour:

Black (RAL 9011).

Inserts:

P912:

Galvanised steel threaded and articulated stem (ball 12.4) with milled seat for wrench (type B) (thread tolerance 6g).

P912CIN:

Stainless steel threaded and articulated stem (ball 12.4) with milled seat for wrench (type B) (Aisi 303) (thread tolerance 6g).

Ground fixing:

The mounting foot is supplied with closed holes for anchoring to the ground. To open them pierce the plastic membrane (see drawing).

Special requests:

Upon request and for special quantities inserts can be supplied with customised lengths.

Upon request and for special quantities the foot can be supplied in Orange (RAL 2004).

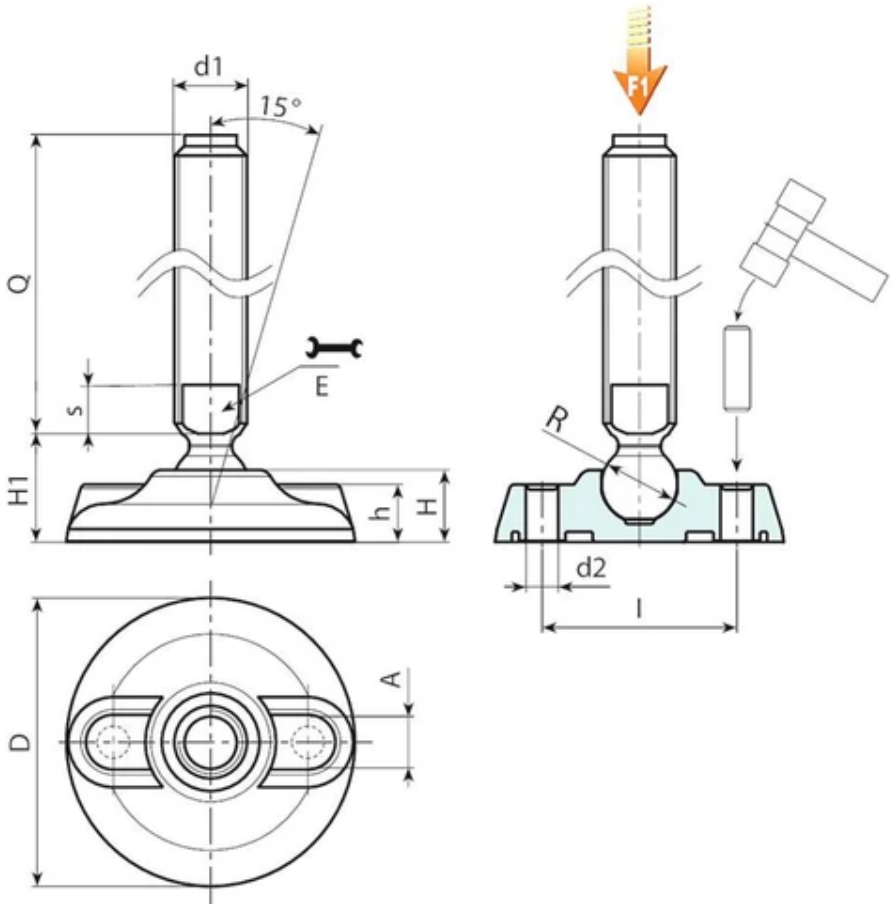

Version P912: Mounting foot with stem type B (with milled seat for wrench) and ball 12.4

Code	Art.	D	H	l	H1	h	A	E	s	d2	R	d1 6g	Q	Weight (g)	F1 (kN)
P912080.0011	P912080.TM16X7001	80	20	54	25.5	16	20	13	7	9	12.5	M16	70	146	10
P912080.0012	P912080.TM16X9001	80	20	54	25.5	16	20	13	7	9	12.5	M16	90	172	10
P912080.0001	P912080.TM16X11001	80	20	54	25.5	16	20	13	7	9	12.5	M16	110	198	10
P912080.0003	P912080.TM16X13001	80	20	54	25.5	16	20	13	7	9	12.5	M16	130	224	10
P912080.0005	P912080.TM16X15001	80	20	54	25.5	16	20	13	7	9	12.5	M16	150	250	10
P912080.0008	P912080.TM16X17001	80	20	54	25.5	16	20	13	7	9	12.5	M16	170	276	10

Attention: The expressed load limit F1 is lower than the break load by 30% and is intended as static.
Customised stud length available for a minimum of 100 pieces.

Version P912CIN: Mounting foot with stem type B - stainless steel - (with milled seat for wrench) and ball 12.4

Code	Art.	D	H	l	H1	h	A	E	s	d2	R	d1 6g	Q	Weight (g)	F1 (kN)
P912080.0002	P912080.TM16X11001CIN	80	20	54	25.5	16	20	13	7	9	12.5	M16	110	198	10
P912080.0004	P912080.TM16X13001CIN	80	20	54	25.5	16	20	13	7	9	12.5	M16	130	224	10
P912080.0007	P912080.TM16X15001CIN	80	20	54	25.5	16	20	13	7	9	12.5	M16	150	250	10
P912080.0009	P912080.TM16X17001CIN	80	20	54	25.5	16	20	13	7	9	12.5	M16	170	276	10

Attention: The expressed load limit F1 is lower than the break load by 30% and is intended as static.
Customised stud length available for a minimum of 100 pieces.

P913

+135° -30° | PA6 +G.F. | RoHS COMPLIANT

16

MOUNTING FOOT WITH GROUND FIXING AND STEEL ARTICULATED STEM TYPE B - BALL 15

Piedi plastica con fissaggio - stelo snodato

Materials:

Reinforced polyamide. Resistant to oils and greases.

Surface finish:

Satin.

Colour:

Black (RAL 9011).

Inserts:

P913:

Galvanised steel threaded and articulated stem (ball 15) with milled seat for wrench (type B) (thread tolerance 6g).

P913CIN:

Stainless steel threaded and articulated stem (ball 15) with milled seat for wrench (type B) (Aisi 304) (thread tolerance 6g).

Ground fixing:

The mounting foot is supplied with closed holes for anchoring to the ground. To open them pierce the plastic membrane (see drawing).

Special requests:

Upon request and for special quantities inserts can be supplied with customised lengths.

Upon request and for special quantities the foot can be supplied in Orange (RAL 2004).

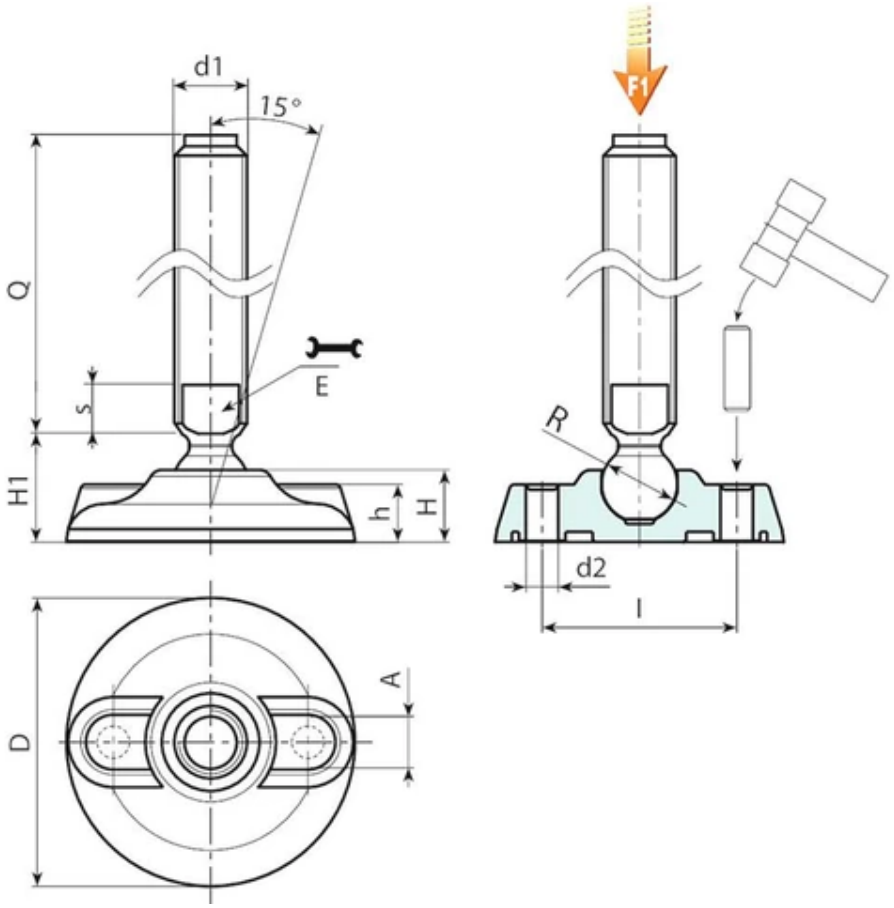

Version P913: Mounting foot with stem type B (with milled seat for wrench) and ball 15

Code	Art.	D	H	l	H1	h	A	E	s	d2	R	d1 6g	Q	Weight (g)	F1 (kN)
P913080.0013	P913080.TM20X5001	80	20	54	25.5	16	20	16	7	9	15	M20	50	166	17
P913080.0014	P913080.TM20X7001	80	20	54	25.5	16	20	16	7	9	15	M20	70	206	17
P913080.0015	P913080.TM20X9001	80	20	54	25.5	16	20	16	7	9	15	M20	90	246	17
P913080.0003	P913080.TM20X11001	80	20	54	25.5	16	20	16	7	9	15	M20	110	287	17
P913080.0004	P913080.TM20X13001	80	20	54	25.5	16	20	16	7	9	15	M20	130	327	17
P913080.0006	P913080.TM20X15001	80	20	54	25.5	16	20	16	7	9	15	M20	150	367	17
P913080.0008	P913080.TM20X17001	80	20	54	25.5	16	20	16	7	9	15	M20	170	407	17
P913080.0009	P913080.TM20X19001	80	20	54	25.5	16	20	16	7	9	15	M20	190	447	17
P913080.0011	P913080.TM20X21001	80	20	54	25.5	16	20	16	7	9	15	M20	210	487	17
P913105.0016	P913105.TM20X5001	105	22	74	28	18.5	21	16	7	11	15	M20	50	216	17
P913105.0017	P913105.TM20X7001	105	22	74	28	18.5	21	16	7	11	15	M20	70	256	17
P913105.0019	P913105.TM20X9001	105	22	74	28	18.5	21	16	7	11	15	M20	90	296	17
P913105.0002	P913105.TM20X11001	105	22	74	28	18.5	21	16	7	11	15	M20	110	337	17
P913105.0004	P913105.TM20X13001	105	22	74	28	18.5	21	16	7	11	15	M20	130	377	17
P913105.0008	P913105.TM20X15001	105	22	74	28	18.5	21	16	7	11	15	M20	150	417	17
P913105.0011	P913105.TM20X17001	105	22	74	28	18.5	21	16	7	11	15	M20	170	457	17
P913105.0012	P913105.TM20X19001	105	22	74	28	18.5	21	16	7	11	15	M20	190	500	17
P913105.0014	P913105.TM20X21001	105	22	74	28	18.5	21	16	7	11	15	M20	210	540	17
P913130.0014	P913130.TM20X5001	130	24	99	30	20	21	16	7	13	15	M20	50	284	17
P913130.0015	P913130.TM20X7001	130	24	99	30	20	21	16	7	13	15	M20	70	324	17
P913130.0017	P913130.TM20X9001	130	24	99	30	20	21	16	7	13	15	M20	90	364	17

Code	Art.	D	H	I	H1	h	A	E	s	d2	R	d1 6g	Q	Weight (g)	F1 (kN)
P913130.0001	P913130.TM20X11001	130	24	99	30	20	21	16	7	13	15	M20	110	404	17
P913130.0003	P913130.TM20X13001	130	24	99	30	20	21	16	7	13	15	M20	130	445	17
P913130.0005	P913130.TM20X15001	130	24	99	30	20	21	16	7	13	15	M20	150	485	17
P913130.0009	P913130.TM20X17001	130	24	99	30	20	21	16	7	13	15	M20	170	525	17
P913130.0010	P913130.TM20X19001	130	24	99	30	20	21	16	7	13	15	M20	190	565	17
P913130.0012	P913130.TM20X21001	130	24	99	30	20	21	16	7	13	15	M20	210	605	17
P913080.0018	P913080.TM24X15001	80	20	54	25.5	16	20	19	8	9	15	M24	150	504	17
P913080.0020	P913080.TM24X17001	80	20	54	25.5	16	20	19	8	9	15	M24	170	564	17
P913080.0021	P913080.TM24X19001	80	20	54	25.5	16	20	19	8	9	15	M24	190	624	17
P913080.0023	P913080.TM24X21001	80	20	54	25.5	16	20	19	8	9	15	M24	210	684	17
P913105.0022	P913105.TM24X15001	105	22	74	28	18.5	21	19	8	11	15	M24	150	553	17
P913105.0024	P913105.TM24X17001	105	22	74	28	18.5	21	19	8	11	15	M24	170	613	17
P913105.0025	P913105.TM24X19001	105	22	74	28	18.5	21	19	8	11	15	M24	190	673	17
P913105.0027	P913105.TM24X21001	105	22	74	28	18.5	21	19	8	11	15	M24	210	735	17
P913130.0020	P913130.TM24X15001	130	24	99	30	20	21	19	8	13	15	M24	150	618	17
P913130.0022	P913130.TM24X17001	130	24	99	30	20	21	19	8	13	15	M24	170	678	17
P913130.0023	P913130.TM24X19001	130	24	99	30	20	21	19	8	13	15	M24	190	738	17
P913130.0025	P913130.TM24X21001	130	24	99	30	20	21	19	8	13	15	M24	210	796	17

Attention: The expressed load limit F1 is lower than the break load by 30% and is intended as static.
Customised stud length available for a minimum of 100 pieces.

Version P913CIN: Mounting foot with stem type B - stainless steel - (with milled seat for wrench) and ball 15

Code	Art.	D	H	I	H1	h	A	E	s	d2	R	d1 6g	Q	Weight (g)	F1 (kN)
P913080.0001	P913080.TM20X07001CIN	80	20	54	25.5	16	20	16	7	9	15	M20	70	206	17
P913080.0002	P913080.TM20X09001CIN	80	20	54	25.5	16	20	16	7	9	15	M20	90	246	17
P913080.0005	P913080.TM20X13001CIN	80	20	54	25.5	16	20	16	7	9	15	M20	130	327	17
P913080.0007	P913080.TM20X15001CIN	80	20	54	25.5	16	20	16	7	9	15	M20	150	367	17
P913080.0010	P913080.TM20X19001CIN	80	20	54	25.5	16	20	16	7	9	15	M20	190	447	17
P913080.0012	P913080.TM20X21001CIN	80	20	54	25.5	16	20	16	7	9	15	M20	210	487	17
P913105.0018	P913105.TM20X7001CIN	105	22	74	28	18.5	21	16	7	11	15	M20	70	256	17
P913105.0020	P913105.TM20X9001CIN	105	22	74	28	18.5	21	16	7	11	15	M20	90	296	17
P913105.0005	P913105.TM20X13001CIN	105	22	74	28	18.5	21	16	7	11	15	M20	130	377	17
P913105.0009	P913105.TM20X15001CIN	105	22	74	28	18.5	21	16	7	11	15	M20	150	417	17
P913105.0013	P913105.TM20X19001CIN	105	22	74	28	18.5	21	16	7	11	15	M20	190	500	17
P913105.0015	P913105.TM20X21001CIN	105	22	74	28	18.5	21	16	7	11	15	M20	210	540	17
P913130.0016	P913130.TM20X7001CIN	130	24	99	30	20	21	16	7	13	15	M20	70	324	17
P913130.0018	P913130.TM20X9001CIN	130	24	99	30	20	21	16	7	13	15	M20	90	364	17
P913130.0004	P913130.TM20X13001CIN	130	24	99	30	20	21	16	7	13	15	M20	130	445	17
P913130.0007	P913130.TM20X15001CIN	130	24	99	30	20	21	16	7	13	15	M20	150	485	17
P913130.0011	P913130.TM20X19001CIN	130	24	99	30	20	21	16	7	13	15	M20	190	565	17

Code	Art.	D	H	I	H1	h	A	E	s	d2	R	d1 6g	Q	Weight (g)	F1 (kN)
P913130.0013	P913130.TM20X21001CIN	130	24	99	30	20	21	16	7	13	15	M20	210	605	17
P913080.0016	P913080.TM24X11001CIN	80	20	54	25.5	16	20	19	8	9	15	M24	110	384	17
P913080.0019	P913080.TM24X15001CIN	80	20	54	25.5	16	20	19	8	9	15	M24	150	504	17
P913080.0022	P913080.TM24X19001CIN	80	20	54	25.5	16	20	19	8	9	15	M24	190	624	17
P913105.0021	P913105.TM24X11001CIN	105	22	74	28	18.5	21	19	8	11	15	M24	110	433	17
P913105.0023	P913105.TM24X15001CIN	105	22	74	28	18.5	21	19	8	11	15	M24	150	553	17
P913105.0026	P913105.TM24X19001CIN	105	22	74	28	18.5	21	19	8	11	15	M24	190	673	17
P913130.0019	P913130.TM24X11001CIN	130	24	99	30	20	21	19	8	13	15	M24	110	498	17
P913130.0021	P913130.TM24X15001CIN	130	24	99	30	20	21	19	8	13	15	M24	150	618	17
P913130.0024	P913130.TM24X19001CIN	130	24	99	30	20	21	19	8	13	15	M24	190	738	17

Attention: The expressed load limit F1 is lower than the break load by 30% and is intended as static.
Customised stud length available for a minimum of 100 pieces.

P914

+135° -30° | PA6 +G.F. | RoHS COMPLIANT

16

MOUNTING FOOT WITH GROUND FIXING AND STEEL ARTICULATED STEM TYPE B - BALL 24

Piedi plastica con fissaggio - stelo snodato

Materials:

Reinforced polyamide. Resistant to oils and greases.

Surface finish:

Satin.

Colour:

Black (RAL 9011).

Inserts:

P914:

Galvanised steel threaded and articulated stem (ball 24) with milled seat for wrench (type B) (thread tolerance 6g).

P914CIN:

Stainless steel threaded and articulated stem (ball 24) with milled seat for wrench (type B) (thread tolerance 6g).

Stainless steel threaded and articulated stem (ball 24) with milled seat for wrench (type B) (thread tolerance 6g). M24: Aisi 303; M30: Aisi 304

Ground fixing:

The mounting foot is supplied with closed holes for anchoring to the ground. To open them pierce the plastic membrane (see drawing).

Special requests:

Upon request and for special quantities inserts can be supplied with customised lengths.

Upon request and for special quantities the foot can be supplied in Orange (RAL 2004).

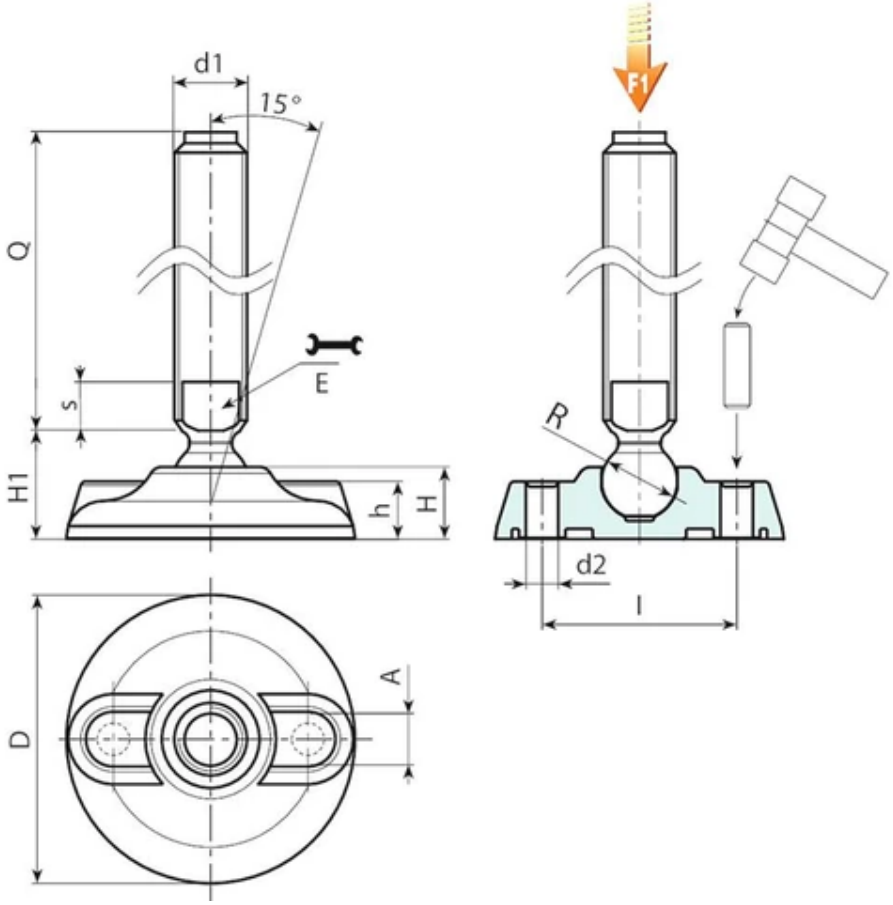

Version P914: Mounting foot with stem type B (with milled seat for wrench) and ball 24

Code	Art.	D	H	l	H1	h	A	E	s	d2	R	d1 6g	Q	Weight (g)	F1 (kN)
P914080.0001	P914080.TM24X11001	80	20	54	25.5	16	20	19	10	9	24	M24	110	384	25
P914080.0003	P914080.TM24X13001	80	20	54	25.5	16	20	19	10	9	24	M24	130	444	25
P914080.0005	P914080.TM24X15001	80	20	54	25.5	16	20	19	10	9	24	M24	150	504	25
P914080.0007	P914080.TM24X17001	80	20	54	25.5	16	20	19	10	9	24	M24	170	564	25
P914080.0009	P914080.TM30X11001	80	20	54	25.5	16	20	27	12	9	24	M30	110	627	25
P914080.0010	P914080.TM30X13001	80	20	54	25.5	16	20	27	12	9	24	M30	130	722	25
P914080.0012	P914080.TM30X15001	80	20	54	25.5	16	20	27	12	9	24	M30	150	817	25
P914080.0013	P914080.TM30X17001	80	20	54	25.5	16	20	27	12	9	24	M30	170	912	25
P914080.0015	P914080.TM30X19001	80	20	54	25.5	16	20	27	12	9	24	M30	190	1007	25
P914080.0016	P914080.TM30X21001	80	20	54	25.5	16	20	27	12	9	24	M30	210	1100	25
P914105.0001	P914105.TM24X11001	105	22	74	28	18.5	21	19	10	11	24	M24	110	433	25
P914105.0003	P914105.TM24X13001	105	22	74	28	18.5	21	19	10	11	24	M24	130	493	25
P914105.0005	P914105.TM24X15001	105	22	74	28	18.5	21	19	10	11	24	M24	150	553	25
P914105.0007	P914105.TM24X17001	105	22	74	28	18.5	21	19	10	11	24	M24	170	613	25
P914105.0009	P914105.TM30X11001	105	22	74	28	18.5	21	27	12	11	24	M30	110	676	25
P914105.0010	P914105.TM30X13001	105	22	74	28	18.5	21	27	12	11	24	M30	130	771	25
P914105.0012	P914105.TM30X15001	105	22	74	28	18.5	21	27	12	11	24	M30	150	866	25
P914105.0013	P914105.TM30X17001	105	22	74	28	18.5	21	27	12	11	24	M30	170	960	25
P914105.0015	P914105.TM30X19001	105	22	74	28	18.5	21	27	12	11	24	M30	190	1055	25
P914105.0016	P914105.TM30X21001	105	22	74	28	18.5	21	27	12	11	24	M30	210	1150	25
P914130.0002	P914130.TM24X11001	130	24	99	30	20	21	19	10	13	24	M24	110	498	25

Code	Art.	D	H	I	H1	h	A	E	s	d2	R	d1 6g	Q	Weight (g)	F1 (kN)
P914130.0004	P914130.TM24X13001	130	24	99	30	20	21	19	10	13	24	M24	130	558	25
P914130.0006	P914130.TM24X15001	130	24	99	30	20	21	19	10	13	24	M24	150	618	25
P914130.0008	P914130.TM24X17001	130	24	99	30	20	21	19	10	13	24	M24	170	678	25
P914130.0019	P914130.TM30X11001	130	24	99	30	20	21	27	12	13	24	M30	110	741	25
P914130.0019	P914130.TM30X13001	130	24	99	30	20	21	27	12	13	24	M30	130	836	25
P914130.0019	P914130.TM30X15001	130	24	99	30	20	21	27	12	13	24	M30	150	931	25
P914130.0019	P914130.TM30X17001	130	24	99	30	20	21	27	12	13	24	M30	170	1025	25
P914130.0019	P914130.TM30X19001	130	24	99	30	20	21	27	12	13	24	M30	190	1120	25
P914130.0019	P914130.TM30X21001	130	24	99	30	20	21	27	12	13	24	M30	210	1220	25

Attention: The expressed load limit F1 is lower than the break load by 30% and is intended as static.
Customised stud length available for a minimum of 100 pieces.

Version P914CIN: Mounting foot with stem type B - stainless steel - (with milled seat for wrench) and ball 24

Code	Art.	D	H	I	H1	h	A	E	s	d2	R	d1 6g	Q	Weight (g)	F1 (kN)
P914080.0002	P914080.TM24X11001CIN	80	20	54	25.5	16	20	19	10	9	24	M24	110	384	25
P914080.0004	P914080.TM24X13001CIN	80	20	54	25.5	16	20	19	10	9	24	M24	130	444	25
P914080.0006	P914080.TM24X15001CIN	80	20	54	25.5	16	20	19	10	9	24	M24	150	504	25
P914080.0008	P914080.TM24X19001CIN	80	20	54	25.5	16	20	19	10	9	24	M24	190	624	25
P914080.0011	P914080.TM30X13001CIN	80	20	54	25.5	16	20	27	12	9	24	M30	130	722	25
P914080.0014	P914080.TM30X17001CIN	80	20	54	25.5	16	20	27	12	9	24	M30	170	912	25
P914080.0017	P914080.TM30X21001CIN	80	20	54	25.5	16	20	27	12	9	24	M30	210	1100	25
P914105.0002	P914105.TM24X11001CIN	105	22	74	28	18.5	21	19	10	11	24	M24	110	433	25
P914105.0004	P914105.TM24X13001CIN	105	22	74	28	18.5	21	19	10	11	24	M24	130	493	25
P914105.0006	P914105.TM24X15001CIN	105	22	74	28	18.5	21	19	10	11	24	M24	150	553	25
P914105.0008	P914105.TM24X19001CIN	105	22	74	28	18.5	21	19	10	11	24	M24	190	673	25
P914105.0011	P914105.TM30X13001CIN	105	22	74	28	18.5	21	27	12	11	24	M30	130	771	25
P914105.0014	P914105.TM30X17001CIN	105	22	74	28	18.5	21	27	12	11	24	M30	170	960	25
P914105.0017	P914105.TM30X21001CIN	105	22	74	28	18.5	21	27	12	11	24	M30	210	1150	25
P914130.0003	P914130.TM24X11001CIN	130	24	99	30	20	21	21	19	13	24	M24	110	498	25
P914130.0005	P914130.TM24X13001CIN	130	24	99	30	20	21	21	19	13	24	M24	130	558	25
P914130.0007	P914130.TM24X15001CIN	130	24	99	30	20	21	21	19	13	24	M24	150	618	25
P914130.0010	P914130.TM24X19001CIN	130	24	99	30	20	21	21	19	13	24	M24	190	738	25
P914130.0013	P914130.TM30X13001CIN	130	24	99	30	20	21	21	27	13	24	M30	130	836	25
P914130.0016	P914130.TM30X17001CIN	130	24	99	30	20	21	21	27	13	24	M30	170	1025	25
P914130.0020	P914130.TM30X21001CIN	130	24	99	30	20	21	21	27	13	24	M30	210	1220	25

Attention: The expressed load limit F1 is lower than the break load by 30% and is intended as static.
Customised stud length available for a minimum of 100 pieces.

P915

+135° -30° | PA6 +G.F. | SBS | RoHS COMPLIANT

16 MOUNTING FOOT WITH GROUND FIXING AND STEEL ARTICULATED STEM TYPE A - BALL 12.4 AND NON-SLIP BASE

Piedi plastica con fissaggio - stelo snodato+antiscivolo

Materials:

Reinforced polyamide. Resistant to oils and greases.

Surface finish:

Satin.

Colour:

Black (RAL 9011).

Inserts:

P915:

Galvanised steel threaded and articulated stem (ball 12.4) with hexagonal base (thread tolerance 6g).

P915CIN:

Stainless steel threaded and articulated stem (ball 12.4) with hexagonal base (Aisi 303) (thread tolerance 6g).

Non-slip base:

Non-slip base in thermoplastic rubber SBS 75 Shore, black RAL 9011. Resistant to oils and greases. Push-fit assembly.

Ground fixing:

The mounting foot is supplied with closed holes for anchoring to the ground. To open them pierce the plastic membrane (see drawing).

Special requests:

Upon request and for special quantities inserts can be supplied with customised lengths.

Upon request and for special quantities the foot can be supplied in Orange (RAL 2004).

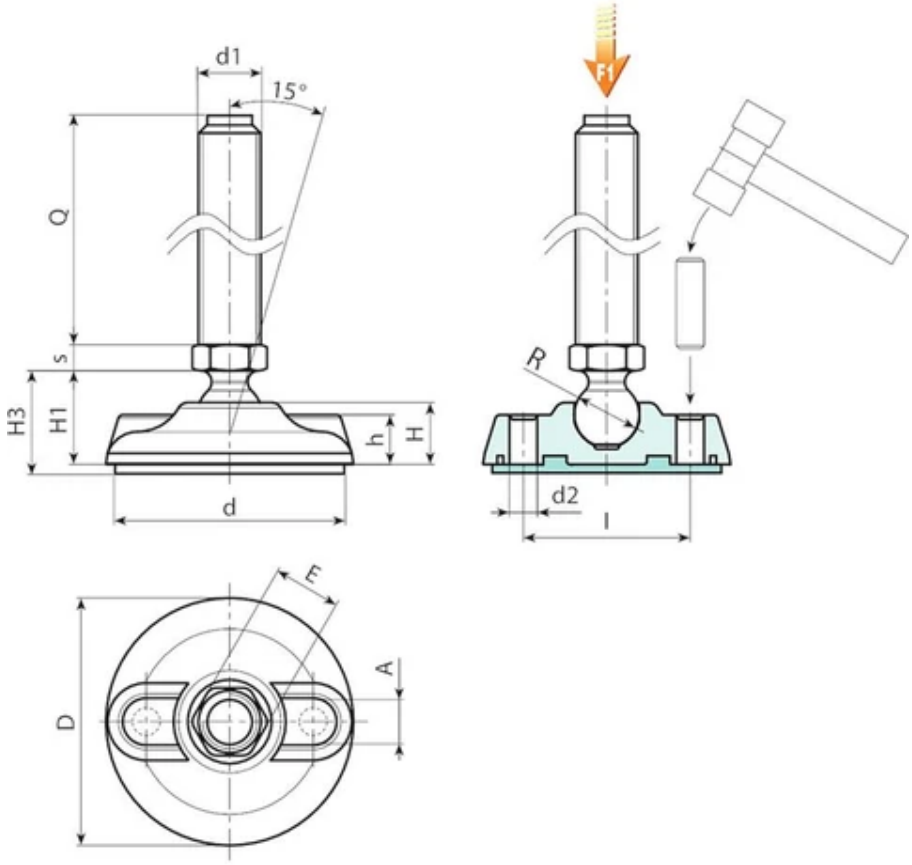

Version P915: Mounting foot with stem type A (with hexagonal base) and ball 12.4 - with SBS non-slip base

Code	Art.	D	H	l	H1	H3	h	A	E	s	d2	d	R	d1 6g	Q	Weight (g)	F1 (kN)
P915080.0001	P915080.TM08X4501	80	20	54	25.5	28.5	16	20	13	5	9	75	12.5	M8	45	91	10
P915080.0003	P915080.TM08X7001	80	20	54	25.5	28.5	16	20	13	5	9	75	12.5	M8	70	97	10
P915080.0007	P915080.TM10X4501	80	20	54	25.5	28.5	16	20	13	5	9	75	12.5	M10	45	97	10
P915080.0009	P915080.TM10X7001	80	20	54	25.5	28.5	16	20	13	5	9	75	12.5	M10	70	109	10
P915080.0005	P915080.TM10X10001	80	20	54	25.5	28.5	16	20	13	5	9	75	12.5	M10	100	146	10
P915080.0018	P915080.TM12X4501	80	20	54	25.5	28.5	16	20	13	5	9	75	12.5	M12	45	107	10
P915080.0020	P915080.TM12X7001	80	20	54	25.5	28.5	16	20	13	5	9	75	12.5	M12	70	124	10
P915080.0012	P915080.TM12X10001	80	20	54	25.5	28.5	16	20	13	5	9	75	12.5	M12	100	168	10

Attention: The expressed load limit F1 is lower than the break load by 30% and is intended as static.
Customised stud length available for a minimum of 100 pieces.

Version P915CIN: Mounting foot with stem type A - stainless steel - (with hexagonal base) and ball 12.4 - with SBS non-slip base

Code	Art.	D	H	l	H1	H3	h	A	E	s	d2	d	R	d1 6g	Q	Weight (g)	F1 (kN)
P915080.0001	P915080.TM08X4501	80	20	54	25.5	28.5	16	20	13	5	9	75	12.5	M8	45	91	10
P915080.0003	P915080.TM08X7001	80	20	54	25.5	28.5	16	20	13	5	9	75	12.5	M8	70	97	10
P915080.0007	P915080.TM10X4501	80	20	54	25.5	28.5	16	20	13	5	9	75	12.5	M10	45	97	10
P915080.0009	P915080.TM10X7001	80	20	54	25.5	28.5	16	20	13	5	9	75	12.5	M10	70	109	10
P915080.0005	P915080.TM10X10001	80	20	54	25.5	28.5	16	20	13	5	9	75	12.5	M10	100	146	10
P915080.0018	P915080.TM12X4501	80	20	54	25.5	28.5	16	20	13	5	9	75	12.5	M12	45	107	10
P915080.0020	P915080.TM12X7001	80	20	54	25.5	28.5	16	20	13	5	9	75	12.5	M12	70	124	10

Code	Art.	D	H	l	H1	H3	h	A	E	s	d2	d	R	d1 6g	Q	Weight (g)	F1 (kN)
P915080.0012	P915080.TM12X10001	80	20	54	25.5	28.5	16	20	13	5	9	75	12.5	M12	100	168	10

Attention: The expressed load limit F1 is lower than the break load by 30% and is intended as static.
Customised stud length available for a minimum of 100 pieces.

P916

+135° -30° | PA6 +G.F. | SBS | RoHS COMPLIANT

16 MOUNTING FOOT WITH GROUND FIXING AND STEEL ARTICULATED STEM TYPE B - BALL 12.4 AND NON-SLIP BASE

Piedi plastica con fissaggio - stelo snodato+antiscivolo

Materials:

Reinforced polyamide. Resistant to oils and greases.

Surface finish:

Satin.

Colour:

Black (RAL 9011).

Inserts:

P916:

Galvanised steel threaded and articulated stem (ball 12.4) with milled seat for wrench (type B) (thread tolerance 6g).

P916CIN:

Stainless steel threaded and articulated stem (ball 12.4) with milled seat for wrench (type B) (Aisi 303) (thread tolerance 6g).

Non-slip base:

Non-slip base in thermoplastic rubber SBS 75 Shore, black RAL 9011. Resistant to oils and greases. Push-fit assembly.

Ground fixing:

The mounting foot is supplied with closed holes for anchoring to the ground. To open them pierce the plastic membrane (see drawing).

Special requests:

Upon request and for special quantities inserts can be supplied with customised lengths.

Upon request and for special quantities the foot can be supplied in Orange (RAL 2004).

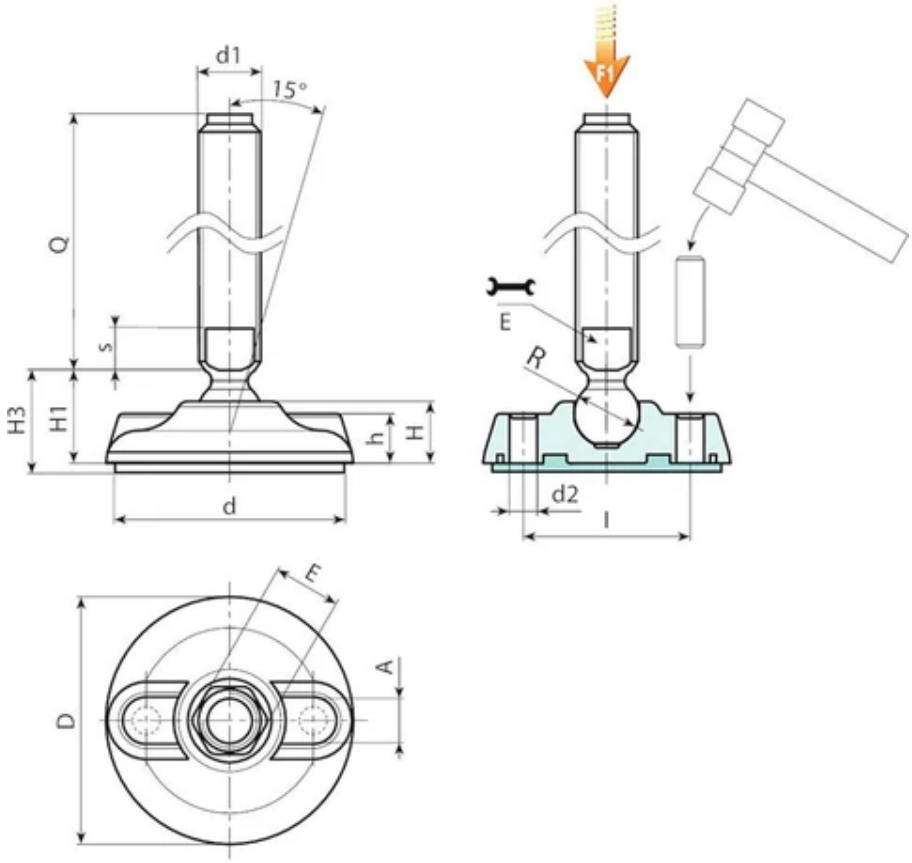

Version P916: Mounting foot with stem type B (with milled seat for wrench) and ball 12.4 - with SBS non-slip base

Code	Art.	D	H	l	H1	H3	h	A	E	s	d2	d	R	d1 6g	Q	Weight (g)	F1 (kN)
P916080.0012	P916080.TM16X7001	80	20	54	25.5	28.5	16	20	13	7	9	75	12.5	M16	70	171	10
P916080.0014	P916080.TM16X9001	80	20	54	25.5	28.5	16	20	13	7	9	75	12.5	M16	90	194	10
P916080.0001	P916080.TM16X11001	80	20	54	25.5	28.5	16	20	13	7	9	75	12.5	M16	110	217	10
P916080.0003	P916080.TM16X13001	80	20	54	25.5	28.5	16	20	13	7	9	75	12.5	M16	130	240	10
P916080.0006	P916080.TM16X15001	80	20	54	25.5	28.5	16	20	13	7	9	75	12.5	M16	150	263	10
P916080.0009	P916080.TM16X17001	80	20	54	25.5	28.5	16	20	13	7	9	75	12.5	M16	170	286	10

Attention: The expressed load limit F1 is lower than the break load by 30% and is intended as static.
Customised stud length available for a minimum of 100 pieces.

Version P916CIN: Mounting foot with stem type B - stainless steel - (with milled seat for wrench) and ball 12.4 - with SBS non-slip base

Code	Art.	D	H	l	H1	H3	h	A	E	s	d2	d	R	d1 6g	Q	Weight (g)	F1 (kN)
P916080.0002	P916080.TM16X11001CIN	80	20	54	25.5	28.5	16	20	13	7	9	75	12.5	M16	110	217	10
P916080.0004	P916080.TM16X13001CIN	80	20	54	25.5	28.5	16	20	13	7	9	75	12.5	M16	130	240	10
P916080.0007	P916080.TM16X15001CIN	80	20	54	25.5	28.5	16	20	13	7	9	75	12.5	M16	150	263	10
P916080.0011	P916080.TM16X17001CIN	80	20	54	25.5	28.5	16	20	13	7	9	75	12.5	M16	170	286	10

Attention: The expressed load limit F1 is lower than the break load by 30% and is intended as static.
Customised stud length available for a minimum of 100 pieces.

P917

+135° -30° | PA6 +G.F. | SBS | RoHS COMPLIANT

16

MOUNTING FOOT WITH GROUND FIXING AND STEEL ARTICULATED STEM TYPE B - BALL 15 AND NON-SLIP BASE

Piedi plastica con fissaggio - stelo snodato+antiscivolo

Materials:

Reinforced polyamide. Resistant to oils and greases.

Surface finish:

Satin.

Colour:

Black (RAL 9011).

Inserts:

P917:

Galvanised steel threaded and articulated stem (ball 15) with milled seat for wrench (type B) (thread tolerance 6g).

P917CIN:

Stainless steel threaded and articulated stem (ball 15) with milled seat for wrench (type B) (Aisi 303) (thread tolerance 6g).

Non-slip base:

Non-slip base in thermoplastic rubber SBS 75 Shore, black RAL 9011. Resistant to oils and greases. Push-fit assembly.

Ground fixing:

The mounting foot is supplied with closed holes for anchoring to the ground. To open them pierce the plastic membrane (see drawing).

Special requests:

Upon request and for special quantities inserts can be supplied with customised lengths.

Upon request and for special quantities the foot can be supplied in Orange (RAL 2004).

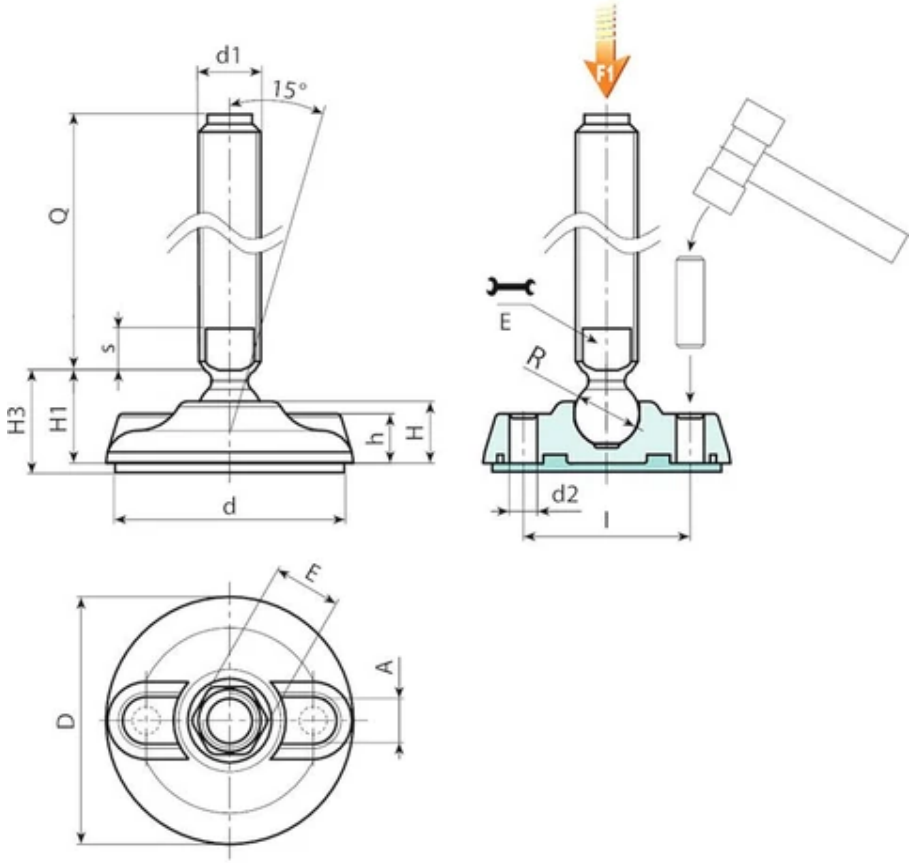

Version P917: Mounting foot with stem type B (with milled seat for wrench) and ball 15 - with SBS non-slip base

Code	Art.	D	H	l	H1	H3	h	A	E	s	d2	d	R	d1 6g	Q	Weight (g)	F1 (kN)
P917080.0011	P917080.TM20X5001	80	20	54	25.5	28.5	16	20	16	7	9	75	15	M20	50	191	17
P917080.0012	P917080.TM20X7001	80	20	54	25.5	28.5	16	20	16	7	9	75	15	M20	70	231	17
P917080.0014	P917080.TM20X9001	80	20	54	25.5	28.5	16	20	16	7	9	75	15	M20	90	271	17
P917080.0001	P917080.TM20X11001	80	20	54	25.5	28.5	16	20	16	7	9	75	15	M20	110	311	17
P917080.0002	P917080.TM20X13001	80	20	54	25.5	28.5	16	20	16	7	9	75	15	M20	130	351	17
P917080.0004	P917080.TM20X15001	80	20	54	25.5	28.5	16	20	16	7	9	75	15	M20	150	391	17
P917080.0006	P917080.TM20X17001	80	20	54	25.5	28.5	16	20	16	7	9	75	15	M20	170	431	17
P917080.0007	P917080.TM20X19001	80	20	54	25.5	28.5	16	20	16	7	9	75	15	M20	190	470	17
P917080.0009	P917080.TM20X21001	80	20	54	25.5	28.5	16	20	16	7	9	75	15	M20	210	510	17
P917105.0013	P917105.TM20X5001	105	22	74	28	32	18.5	21	16	7	11	101	15	M20	50	285	17
P917105.0014	P917105.TM20X7001	105	22	74	28	32	18.5	21	16	7	11	101	15	M20	70	325	17
P917105.0016	P917105.TM20X9001	105	22	74	28	32	18.5	21	16	7	11	101	15	M20	90	365	17
P917105.0002	P917105.TM20X11001	105	22	74	28	32	18.5	21	16	7	11	101	15	M20	110	405	17
P917105.0003	P917105.TM20X13001	105	22	74	28	32	18.5	21	16	7	11	101	15	M20	130	445	17
P917105.0005	P917105.TM20X15001	105	22	74	28	32	18.5	21	16	7	11	101	15	M20	150	485	17
P917105.0008	P917105.TM20X17001	105	22	74	28	32	18.5	21	16	7	11	101	15	M20	170	525	17
P917105.0009	P917105.TM20X19001	105	22	74	28	32	18.5	21	16	7	11	101	15	M20	190	565	17
P917105.0011	P917105.TM20X21001	105	22	74	28	32	18.5	21	16	7	11	101	15	M20	210	605	17
P917130.0015	P917130.TM20X5001	130	24	99	30	35	20	21	16	7	13	126	15	M20	50	396	17
P917130.0016	P917130.TM20X7001	130	24	99	30	35	20	21	16	7	13	126	15	M20	70	436	17
P917130.0018	P917130.TM20X9001	130	24	99	30	35	20	21	16	7	13	126	15	M20	90	476	17

Code	Art.	D	H	I	H1	H3	h	A	E	s	d2	d	R	d1 6g	Q	Weight (g)	F1 (kN)
P917130.0001	P917130.TM20X11001	130	24	99	30	35	20	21	16	7	13	126	15	M20	110	516	17
P917130.0003	P917130.TM20X13001	130	24	99	30	35	20	21	16	7	13	126	15	M20	130	556	17
P917130.0006	P917130.TM20X15001	130	24	99	30	35	20	21	16	7	13	126	15	M20	150	596	17
P917130.0009	P917130.TM20X17001	130	24	99	30	35	20	21	16	7	13	126	15	M20	170	636	17
P917130.0011	P917130.TM20X19001	130	24	99	30	35	20	21	16	7	13	126	15	M20	190	675	17
P917130.0013	P917130.TM20X21001	130	24	99	30	35	20	21	16	7	13	126	15	M20	210	715	17
P917080.0017	P917080.TM24X15001	80	20	54	25.5	28.5	16	20	19	7	9	75	15	M24	150	589	17
P917080.0019	P917080.TM24X17001	80	20	54	25.5	28.5	16	20	19	7	9	75	15	M24	170	650	17
P917080.0020	P917080.TM24X19001	80	20	54	25.5	28.5	16	20	19	7	9	75	15	M24	190	710	17
P917080.0022	P917080.TM24X21001	80	20	54	25.5	28.5	16	20	19	7	9	75	15	M24	210	770	17
P917105.0018	P917105.TM24X15001	105	22	74	28	32	18.5	21	19	7	11	101	15	M24	150	682	17
P917105.0020	P917105.TM24X17001	105	22	74	28	32	18.5	21	19	7	11	101	15	M24	170	742	17
P917105.0021	P917105.TM24X19001	105	22	74	28	32	18.5	21	19	7	11	101	15	M24	190	800	17
P917105.0023	P917105.TM24X21001	105	22	74	28	32	18.5	21	19	7	11	101	15	M24	210	860	17
P917130.0021	P917130.TM24X15001	130	24	99	30	35	20	21	19	7	13	126	15	M24	150	790	17
P917130.0023	P917130.TM24X17001	130	24	99	30	35	20	21	19	7	13	126	15	M24	170	850	17
P917130.0024	P917130.TM24X19001	130	24	99	30	35	20	21	19	7	13	126	15	M24	190	910	17
P917130.0026	P917130.TM24X21001	130	24	99	30	35	20	21	19	7	13	126	15	M24	210	970	17

Attention: The expressed load limit F1 is lower than the break load by 30% and is intended as static.
Customised stud length available for a minimum of 100 pieces.

Version P917CIN: Mounting foot with stem type B - stainless steel - (with milled seat for wrench) and ball 15 - with SBS non-slip base

Code	Art.	D	H	I	H1	H3	h	A	E	s	d2	d	R	d1	Q	Weight (g)	F1 (kN)
P917080.0013	P917080.TM20X7001CIN	80	20	54	25.5	28.5	16	20	16	7	9	75	15	M20	70	231	17
P917080.0015	P917080.TM20X9001CIN	80	20	54	25.5	28.5	16	20	16	7	9	75	15	M20	90	271	17
P917080.0003	P917080.TM20X13001CIN	80	20	54	25.5	28.5	16	20	16	7	9	75	15	M20	130	351	17
P917080.0005	P917080.TM20X15001CIN	80	20	54	25.5	28.5	16	20	16	7	9	75	15	M20	150	391	17
P917080.0008	P917080.TM20X19001CIN	80	20	54	25.5	28.5	16	20	16	7	9	75	15	M20	190	470	17
P917080.0010	P917080.TM20X21001CIN	80	20	54	25.5	28.5	16	20	16	7	9	75	15	M20	210	510	17
P917105.0015	P917105.TM20X7001CIN	105	22	74	28	32	18.5	21	16	7	11	101	15	M20	70	325	17
P917105.0001	P917105.TM20X9001CIN	105	22	74	28	32	18.5	21	16	7	11	101	15	M20	90	365	17
P917105.0004	P917105.TM20X13001CIN	105	22	74	28	32	18.5	21	16	7	11	101	15	M20	130	445	17
P917105.0007	P917105.TM20X15001CIN	105	22	74	28	32	18.5	21	16	7	11	101	15	M20	150	485	17
P917105.0010	P917105.TM20X19001CIN	105	22	74	28	32	18.5	21	16	7	11	101	15	M20	190	565	17
P917105.0012	P917105.TM20X21001CIN	105	22	74	28	32	18.5	21	16	7	11	101	15	M20	210	605	17
P917130.0017	P917130.TM20X7001CIN	130	24	99	30	35	20	21	16	7	13	126	15	M20	70	436	17
P917130.0019	P917130.TM20X9001CIN	130	24	99	30	35	20	21	16	7	13	126	15	M20	90	476	17
P917130.0004	P917130.TM20X13001CIN	130	24	99	30	35	20	21	16	7	13	126	15	M20	130	556	17
P917130.0007	P917130.TM20X15001CIN	130	24	99	30	35	20	21	16	7	13	126	15	M20	150	596	17
P917130.0012	P917130.TM20X19001CIN	130	24	99	30	35	20	21	16	7	13	126	15	M20	190	675	17

Code	Art.	D	H	I	H1	H3	h	A	E	s	d2	d	R	d1	Q	Weight (g)	F1 (kN)
P917130.0014	P917130.TM20X21001CIN	130	24	99	30	35	20	21	16	7	13	126	15	M20	210	715	17
P917080.0016	P917080.TM24X11001CIN	80	20	54	25.5	28.5	16	20	19	7	9	75	15	M24	110	469	17
P917080.0018	P917080.TM24X15001CIN	80	20	54	25.5	28.5	16	20	19	7	9	75	15	M24	150	589	17
P917080.0021	P917080.TM24X19001CIN	80	20	54	25.5	28.5	16	20	19	7	9	75	15	M24	190	710	17
P917105.0017	P917105.TM24X11001CIN	105	22	74	28	32	18.5	21	19	7	11	101	15	M24	110	562	17
P917105.0019	P917105.TM24X15001CIN	105	22	74	28	32	18.5	21	19	7	11	101	15	M24	150	682	17
P917105.0022	P917105.TM24X19001CIN	105	22	74	28	32	18.5	21	19	7	11	101	15	M24	190	800	17
P917130.0020	P917130.TM24X11001CIN	130	24	99	30	35	20	21	19	7	13	126	15	M24	110	670	17
P917130.0022	P917130.TM24X15001CIN	130	24	99	30	35	20	21	19	7	13	126	15	M24	150	790	17
P917130.0025	P917130.TM24X19001CIN	130	24	99	30	35	20	21	19	7	13	126	15	M24	190	910	17

Attention: The expressed load limit F1 is lower than the break load by 30% and is intended as static.
Customised stud length available for a minimum of 100 pieces.

P918

+135° -30° | PA6 +G.F. | SBS | RoHS COMPLIANT

16

MOUNTING FOOT WITH GROUND FIXING AND STEEL ARTICULATED STEM TYPE B - BALL 24 AND NON-SLIP BASE

Piedi plastica con fissaggio - stelo snodato+antiscivolo

Materials:

Reinforced polyamide. Resistant to oils and greases.

Surface finish:

Satin.

Colour:

Black (RAL 9011).

Inserts:

P918:

Galvanised steel threaded and articulated stem (ball 24) with milled seat for wrench (type B) (thread tolerance 6g).

P918CIN:

Stainless steel threaded and articulated stem (ball 24) with milled seat for wrench (type B) (Aisi 303) (thread tolerance 6g).

Non-slip base:

Non-slip base in thermoplastic rubber SBS 75 Shore, black RAL 9011. Resistant to oils and greases. Push-fit assembly.

Ground fixing:

The mounting foot is supplied with closed holes for anchoring to the ground. To open them pierce the plastic membrane (see drawing).

Special requests:

Upon request and for special quantities inserts can be supplied with customised lengths.

Upon request and for special quantities the foot can be supplied in Orange (RAL 2004).

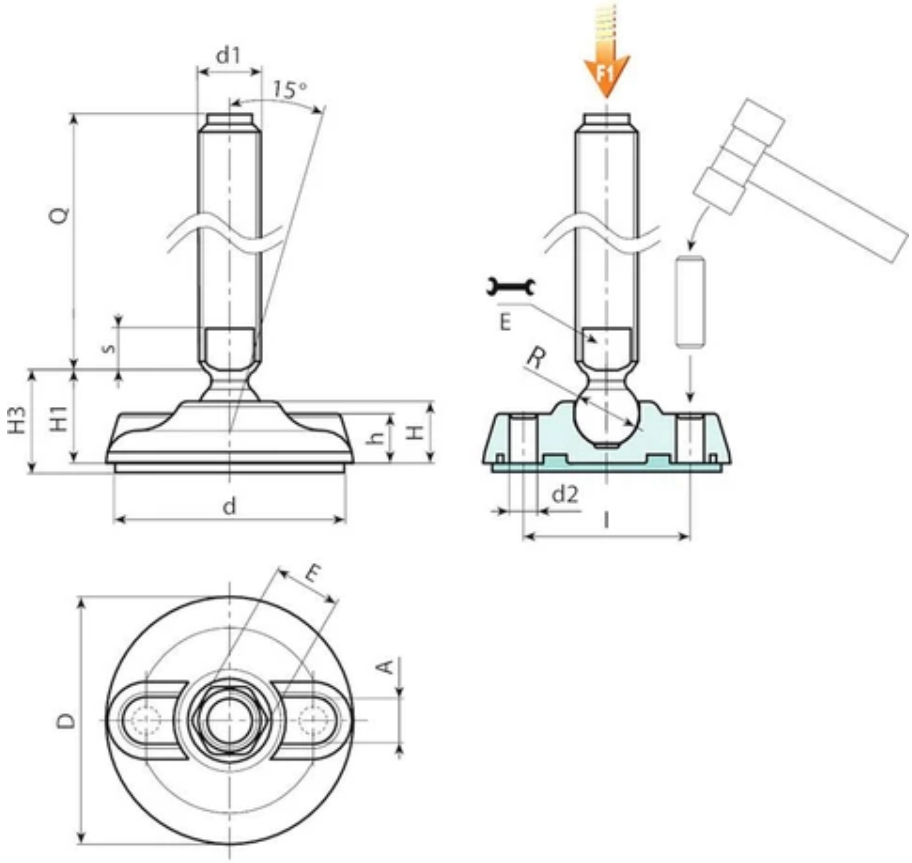

Version P918: Mounting foot with stem type B (with milled seat for wrench) and ball 24 - with SBS non-slip base

Code	Art.	D	H	l	H1	H3	h	A	E	s	d2	d	R	d1 6g	Q	Weight (g)	F1 (kN)
P918080.0001	P918080.TM24X11001	80	20	54	25.5	28.5	16	20	19	10	9	75	24	M24	110	469	25
P918080.0006	P918080.TM24X13001	80	20	54	25.5	28.5	16	20	19	10	9	75	24	M24	130	529	25
P918080.0008	P918080.TM24X15001	80	20	54	25.5	28.5	16	20	19	10	9	75	24	M24	150	589	25
P918080.0010	P918080.TM24X17001	80	20	54	25.5	28.5	16	20	19	10	9	75	24	M24	170	650	25
P918080.0013	P918080.TM30X11001	80	20	54	25.5	28.5	16	20	27	12	9	75	24	M30	110	652	25
P918080.0015	P918080.TM30X13001	80	20	54	25.5	28.5	16	20	27	12	9	75	24	M30	130	747	25
P918080.0017	P918080.TM30X15001	80	20	54	25.5	28.5	16	20	27	12	9	75	24	M30	150	842	25
P918080.0018	P918080.TM30X17001	80	20	54	25.5	28.5	16	20	27	12	9	75	24	M30	170	935	25
P918080.0020	P918080.TM30X19001	80	20	54	25.5	28.5	16	20	27	12	9	75	24	M30	190	1030	25
P918080.0021	P918080.TM30X21001	80	20	54	25.5	28.5	16	20	27	12	9	75	24	M30	210	1125	25
P918105.0001	P918105.TM24X11001	105	22	74	28	32	18.5	21	19	10	11	101	24	M24	110	562	25
P918105.0003	P918105.TM24X13001	105	22	74	28	32	18.5	21	19	10	11	101	24	M24	130	622	25
P918105.0005	P918105.TM24X15001	105	22	74	28	32	18.5	21	19	10	11	101	24	M24	150	682	25
P918105.0007	P918105.TM24X17001	105	22	74	28	32	18.5	21	19	10	11	101	24	M24	170	742	25
P918105.0009	P918105.TM30X11001	105	22	74	28	32	18.5	21	27	12	11	101	24	M30	110	745	25
P918105.0011	P918105.TM30X13001	105	22	74	28	32	18.5	21	27	12	11	101	24	M30	130	840	25
P918105.0013	P918105.TM30X15001	105	22	74	28	32	18.5	21	27	12	11	101	24	M30	150	934	25
P918105.0014	P918105.TM30X17001	105	22	74	28	32	18.5	21	27	12	11	101	24	M30	170	1030	25
P918105.0016	P918105.TM30X19001	105	22	74	28	32	18.5	21	27	12	11	101	24	M30	190	1125	25
P918105.0017	P918105.TM30X21001	105	22	74	28	32	18.5	21	27	12	11	101	24	M30	210	1220	25
P918130.0001	P918130.TM24X11001	130	24	99	30	35	20	21	19	10	13	126	24	M24	110	670	25

Code	Art.	D	H	I	H1	H3	h	A	E	s	d2	d	R	d1 6g	Q	Weight (g)	F1 (kN)
P918130.0003	P918130.TM24X13001	130	24	99	30	35	20	21	19	10	13	126	24	M24	130	730	25
P918130.0005	P918130.TM24X15001	130	24	99	30	35	20	21	19	10	13	126	24	M24	150	790	25
P918130.0007	P918130.TM24X17001	130	24	99	30	35	20	21	19	10	13	126	24	M24	170	850	25
P918130.0010	P918130.TM30X11001	130	24	99	30	35	20	21	27	12	13	126	24	M30	110	853	25
P918130.0011	P918130.TM30X13001	130	24	99	30	35	20	21	27	12	13	126	24	M30	130	948	25
P918130.0013	P918130.TM30X15001	130	24	99	30	35	20	21	27	12	13	126	24	M30	150	1043	25
P918130.0014	P918130.TM30X17001	130	24	99	30	35	20	21	27	12	13	126	24	M30	170	1140	25
P918130.0016	P918130.TM30X19001	130	24	99	30	35	20	21	27	12	13	126	24	M30	190	1235	25
P918130.0018	P918130.TM30X21001	130	24	99	30	35	20	21	27	12	13	126	24	M30	210	1330	25

Attention: The expressed load limit F1 is lower than the break load by 30% and is intended as static.
Customised stud length available for a minimum of 100 pieces.

Version P918CIN: Foot with stem type B - stainless steel - (with milled seat for wrench) and ball 24 - with SBS non-slip base

Code	Art.	D	H	I	H1	H3	h	A	E	s	d2	d	R	d1 6g	Q	Weight (g)	F1 (kN)
P918080.0002	P918080.TM24X11001CIN	80	20	54	25.5	28.5	16	20	19	10	9	75	24	M24	110	469	25
P918080.0007	P918080.TM24X13001CIN	80	20	54	25.5	28.5	16	20	19	10	9	75	24	M24	130	529	25
P918080.0009	P918080.TM24X15001CIN	80	20	54	25.5	28.5	16	20	19	10	9	75	24	M24	150	589	25
P918080.0011	P918080.TM24X19001CIN	80	20	54	25.5	28.5	16	20	19	10	9	75	24	M24	190	709	25
P918080.0016	P918080.TM30X13001CIN	80	20	54	25.5	28.5	16	20	27	12	9	75	24	M30	130	747	25
P918080.0019	P918080.TM30X17001CIN	80	20	54	25.5	28.5	16	20	27	12	9	75	24	M30	170	935	25
P918080.0022	P918080.TM30X21001CIN	80	20	54	25.5	28.5	16	20	27	12	9	75	24	M30	210	1125	25
P918105.0002	P918105.TM24X11001CIN	105	22	74	28	32	18.5	21	19	10	11	101	24	M24	110	562	25
P918105.0004	P918105.TM24X13001CIN	105	22	74	28	32	18.5	21	19	10	11	101	24	M24	130	622	25
P918105.0006	P918105.TM24X15001CIN	105	22	74	28	32	18.5	21	19	10	11	101	24	M24	150	682	25
P918105.0008	P918105.TM24X19001CIN	105	22	74	28	32	18.5	21	19	10	11	101	24	M24	190	802	25
P918105.0012	P918105.TM30X13001CIN	105	22	74	28	32	18.5	21	27	12	11	101	24	M30	130	840	25
P918105.0015	P918105.TM30X17001CIN	105	22	74	28	32	18.5	21	27	12	11	101	24	M30	170	1030	25
P918105.0018	P918105.TM30X21001CIN	105	22	74	28	32	18.5	21	27	12	11	101	24	M30	210	1220	25
P918130.0002	P918130.TM24X11001CIN	130	24	99	30	35	20	21	19	10	13	126	24	M24	110	670	25
P918130.0004	P918130.TM24X13001CIN	130	24	99	30	35	20	21	19	10	13	126	24	M24	130	730	25
P918130.0006	P918130.TM24X15001CIN	130	24	99	30	35	20	21	19	10	13	126	24	M24	150	790	25
P918130.0009	P918130.TM24X19001CIN	130	24	99	30	35	20	21	19	10	13	126	24	M24	190	910	25
P918130.0012	P918130.TM30X13001CIN	130	24	99	30	35	20	21	27	12	13	126	24	M30	130	948	25
P918130.0015	P918130.TM30X17001CIN	130	24	99	30	35	20	21	27	12	13	126	24	M30	170	1140	25
P918130.0019	P918130.TM30X21001CIN	130	24	99	30	35	20	21	27	12	13	126	24	M30	210	1330	25

Attention: The expressed load limit F1 is lower than the break load by 30% and is intended as static.
Customised stud length available for a minimum of 100 pieces.

PEPFZE13-R12,4

+200° -40° C10 RoHS COMPLIANT

16

GALVANISED STEEL THREADED STEM TYPE A - WITH JOINT 12.4 AND HEXAGONAL BASE 13 - OBTAINED BY COLD MOULDING

Steli Filettati

Materials:

Steel with strength class 4.8.

Surface finish:

Smooth.

Colour:

Blue galvanising.

Thread:

Moulded stem with hexagonal base (type A) with rolled thread (thread tolerance 6g).

Special requests:

Upon request and for a minimum quantity of 30,000 pieces, inserts can be supplied with length to customer's drawing.

Compatibility with bases:

These stems are compatible with the following foot bases:

PIE.040S12,4 • PIE.050S12,4 • PIE.060S12,4 • PIE.080S12,4 • PIE.700080S12,4

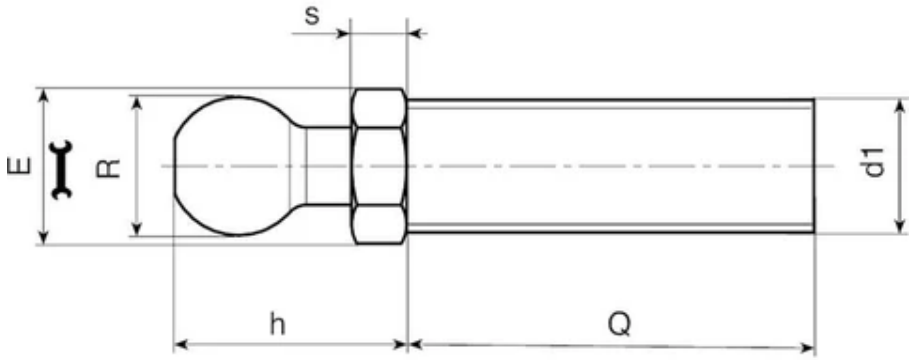

Code	Art.	E	s	h	R ±0,1	d1 6g	Q	Weight (g)
PEP.FZE13X5M08X45	PEP.FZE13X5M08X45	13	5	20	12.4	M8	45	29
PEP.FZE13X5M08X70	PEP.FZE13X5M08X70	13	5	20	12.4	M8	70	36
PEP.FZE13X5M10X45	PEP.FZE13X5M10X45	13	5	20	12.4	M10	45	37
PEP.FZE13X5M10X70	PEP.FZE13X5M10X70	13	5	20	12.4	M10	70	49
PEP.FZE13X5M10X100	PEP.FZE13X5M10X100	13	5	20	12.4	M10	100	85
PEP.FZE13X5M12X45	PEP.FZE13X5M12X45	13	5	20	12.4	M12	45	46
PEP.FZE13X5M12X70	PEP.FZE13X5M12X70	13	5	20	12.4	M12	70	65
PEP.FZE13X5M12X100	PEP.FZE13X5M12X100	13	5	20	12.4	M12	100	85

PEPINTM

+200° -40° | Aisi 303 | Aisi 304 | RoHS COMPLIANT

16 STAINLESS STEEL THREADED STEM TYPE B - WITH MILLED SEAT FOR WRENCH - TURNED

Steli Filettati

Materials:

Stainless steel:

M16 R.12.4 - M24 R.24:

Aisi 303

M20 R.15 - M24 R.15 - M30 R.24:

Aisi 304

Surface finish:

Smooth.

Colour:

Natural.

Thread:

Turned stem with milled seat for wrench (type B) with rolled thread (thread tolerance 6g).

Special requests:

Upon request and for special quantities the length and geometry of the inserts can be supplied to customer's drawing.

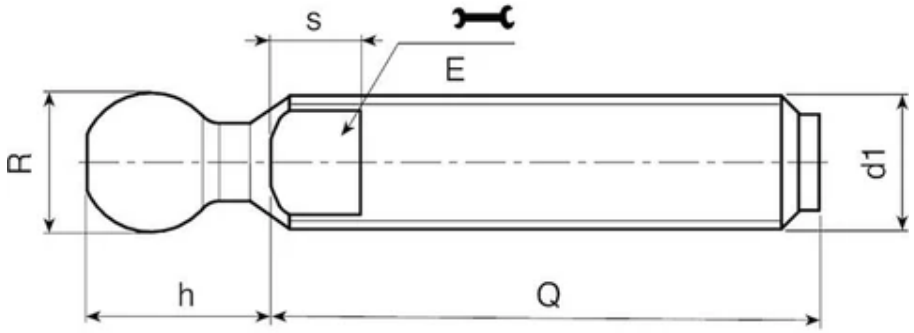

Version M16 with ball 12.4

Code	Art.	E	h	s	R ±0,1	d1 6g	Q	Weight (g)
PEP.INTM16X110Z3	PEP.INTM16X110Z3	13	15	7	12.4	M16	110	150
PEP.INTM16X130Z3	PEP.INTM16X130Z3	13	15	7	12.4	M16	130	176
PEP.INTM16X150Z3	PEP.INTM16X150Z3	13	15	7	12.4	M16	150	202
PEP.INTM16X170Z3	PEP.INTM16X170Z3	13	15	7	12.4	M16	170	228

These stems are compatible with the following foot bases: • PIE.040S12,4 • PIE.050S12,4 • PIE.060S12,4 • PIE.080S12,4 • PIE.700080S125
Customised stud length available for a minimum of 100 pieces.

Version M20-M24 with ball 15

Code	Art.	E	h	s	R	d1 6g	Q	Weight (g)
PEP.HNTM20X70Z3	PEP.HNTM20X70Z3	16	17	7	15	M20	70	174
PEP.HNTM20X90Z3	PEP.HNTM20X90Z3	16	17	7	15	M20	90	206
PEP.HNTM20X130Z3	PEP.HNTM20X130Z3	16	17	7	15	M20	130	270
PEP.HNTM20X150Z3	PEP.HNTM20X150Z3	16	17	7	15	M20	150	305
PEP.HNTM20X190Z3	PEP.HNTM20X190Z3	16	17	7	15	M20	190	370
PEP.HNTM20X210Z3	PEP.HNTM20X210Z3	16	17	7	15	M20	210	405
PEP.HNTM24X110Z3	PEP.HNTM24X110Z3	19	17	8	15	M24	110	390
PEP.HNTM24X150Z3	PEP.HNTM24X150Z3	19	17	8	15	M24	150	510
PEP.HNTM24X190Z3	PEP.HNTM24X190Z3	19	17	8	15	M24	190	630

These stems are compatible with the following foot bases: • PIE.060S15 • PIE.080S15 • PIE.105S15 • PIE.130S15 • PIE.700080S15

Customised stud length available for a minimum of 100 pieces.

Version M24-M30 with ball 24

Code	Art.	E	h	s	R	d1 6g	Q	Weight (g)
PEP.INTM24X110Z5	PEP.INTM24X110Z5	19	27	10	24	M24	110	390
PEP.INTM24X130Z5	PEP.INTM24X130Z5	19	27	10	24	M24	130	450
PEP.INTM24X150Z5	PEP.INTM24X150Z5	19	27	10	24	M24	150	510
PEP.INTM24X190Z5	PEP.INTM24X190Z5	19	27	10	24	M24	190	630
PEP.HNTM30X130Z5	PEP.HNTM30X130Z5	27	27	12	24	M30	130	637
PEP.HNTM30X170Z5	PEP.HNTM30X170Z5	27	27	12	24	M30	170	813
PEP.HNTM30X210Z5	PEP.HNTM30X210Z5	27	27	12	24	M30	210	990

These stems are compatible with the following foot bases: • PIE.080S24 • PIE.105S24 • PIE.130S24 • PIE.700080S24
Customised stud length available for a minimum of 100 pieces.

PEPVZE13-PEPINE13

+200° -40° | AVP | Aisi 303 | RoHS COMPLIANT

16 STEEL THREADED STEM TYPE A - WITH JOINT 12.4 AND HEXAGONAL BASE 13 - TURNED

Steli Filettati

Materials:

PEP.VZE13:

Free-cutting steel (39SMnPb36).

PEP.INE13:

Stainless steel (Aisi 303).

Surface finish:

Smooth.

Colour:

PEP.VZE16:

Blue galvanising.

PEP.INE16:

Natural.

Stem:

Turned stem with hexagonal base (type A) with rolled thread (thread tolerance 6g).

Special requests:

Upon request and for special quantities the length and geometry of the inserts can be supplied to customer's drawing.

Compatibility with bases:

These stems are compatible with the following foot bases:

PIE.040S12,4 • PIE.050S12,4 • PIE.060S12,4 • PIE.080S12,4 • PIE.700080S12,8

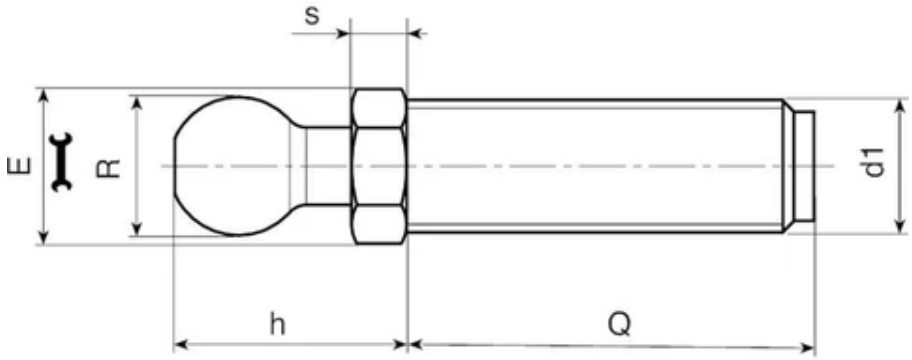

Version PEP.VZE: galvanised steel

Code	Art.	E	s	h	R ±0,1	d1 6g	Q	Q Max	Weight (g)

A.R. = Customised stud length available for a minimum of 100 pieces.

Version PEP.INE: stainless steel (Aisi 303)

Code	Art.	E	s	h	R ±0,1	d1 6g	Q	Q Max	Weight (g)
PEP.INE13X5M08X45	PEP.INE13X5M08X45	13	5	20	12.4	M8	45	70	29
PEP.INE13X5M08X70	PEP.INE13X5M08X70	13	5	20	12.4	M8	70	70	36
PEP.INE13X5M10X45	PEP.INE13X5M10X45	13	5	20	12.4	M10	45	70	37
PEP.INE13X5M10X70	PEP.INE13X5M10X70	13	5	20	12.4	M10	70	70	70
PEP.INE13X5M12X45	PEP.INE13X5M12X45	13	5	20	12.4	M12	45	100	46
PEP.INE13X5M12X70	PEP.INE13X5M12X70	13	5	20	12.4	M12	70	100	65
PEP.INE13X5M12X100	PEP.INE13X5M12X100	13	5	20	12.4	M12	100	100	85

Customised stud length available for a minimum of 100 pieces.

PEPVZE16-PEPINE16

+200° -40° | AVP | Aisi 303 | RoHS COMPLIANT

16 STEEL THREADED STEM TYPE A - WITH JOINT 15 AND HEXAGONAL BASE 16 - TURNED

Steli Filettati

Materials:

PEP.VZE16:

Free-cutting steel (39SMnPb36).

PEP.INE16:

Stainless steel (Aisi 303).

Surface finish:

Smooth.

Colour:

PEP.VZE16:

Blue galvanising.

PEP.INE16:

Natural.

Stem:

Turned stem with hexagonal base (type A) with rolled thread (thread tolerance 6g).

Special requests:

Upon request and for special quantities the length and geometry of the inserts can be supplied to customer's drawing.

Compatibility with bases:

These stems are compatible with the following foot bases:

PIE.060S15 • PIE.080S15 • PIE.105S15 • PIE.130S15 • PIE.700080S15

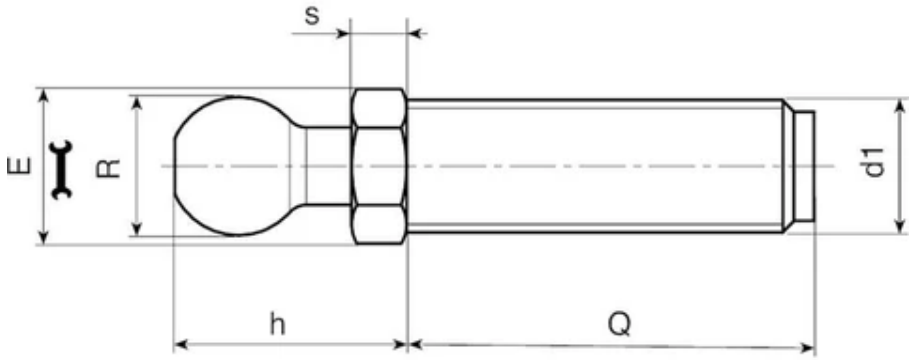

Version PEP.VZE: galvanised steel

Code	Art.	E	s	h	R	d1 6g	Q	Weight (g)
PEP.VZE16X6M12X50	PEP.VZE16X6M12X50	16	6,5	23,5	15	M12	50	63
PEP.VZE16X6M12X70	PEP.VZE16X6M12X70	16	6,5	23,5	15	M12	70	76
PEP.VZE16X6M12X90	PEP.VZE16X6M12X90	16	6,5	23,5	15	M12	90	91
PEP.VZE16X6M12X110	PEP.VZE16X6M12X110	16	6,5	23,5	15	M12	110	107
PEP.VZE16X6M14X50	PEP.VZE16X6M14X50	16	6,5	23,5	15	M14	50	75
PEP.VZE16X6M14X70	PEP.VZE16X6M14X70	16	6,5	23,5	15	M14	70	95
PEP.VZE16X6M14X90	PEP.VZE16X6M14X90	16	6,5	23,5	15	M14	90	116
PEP.VZE16X6M14X110	PEP.VZE16X6M14X110	16	6,5	23,5	15	M14	110	133
PEP.VZE16X6M14X150	PEP.VZE16X6M14X150	16	6,5	23,5	15	M14	150	167
PEP.VZE16X6M16X50	PEP.VZE16X6M16X50	16	6,5	23,5	15	M16	50	91
PEP.VZE16X6M16X70	PEP.VZE16X6M16X70	16	6,5	23,5	15	M16	70	117
PEP.VZE16X6M16X90	PEP.VZE16X6M16X90	16	6,5	23,5	15	M16	90	143
PEP.VZE16X6M16X110	PEP.VZE16X6M16X110	16	6,5	23,5	15	M16	110	168
PEP.VZE16X6M16X130	PEP.VZE16X6M16X130	16	6,5	23,5	15	M16	130	194
PEP.VZE16X6M16X150	PEP.VZE16X6M16X150	16	6,5	23,5	15	M16	150	219
PEP.VZE16X6M16X170	PEP.VZE16X6M16X170	16	6,5	23,5	15	M16	170	247
PEP.VZE16X6M16X190	PEP.VZE16X6M16X190	16	6,5	23,5	15	M16	190	270

Customised stud length available for a minimum of 100 pieces.

Version PEP.INE: stainless steel (Aisi 303)

Code	Art.	E	s	h	R	d1 6g	Q	Weight (g)
PEP.INE16X6M12X70	PEP.INE16X6M12X70	16	6,5	23,5	15	M12	70	76
PEP.INE16X6M12X90	PEP.INE16X6M12X90	16	6,5	23,5	15	M12	90	91
PEP.INE16X6M12X110	PEP.INE16X6M12X110	16	6,5	23,5	15	M12	110	116
PEP.INE16X6M14X70	PEP.INE16X6M14X70	16	6,5	23,5	15	M14	70	95
PEP.INE16X6M14X110	PEP.INE16X6M14X110	16	6,5	23,5	15	M14	110	133
PEP.INE16X6M14X130	PEP.INE16X6M14X130	16	6,5	23,5	15	M14	130	150
PEP.INE16X6M16X50	PEP.INE16X6M16X50	16	6,5	23,5	15	M16	50	91
PEP.INE16X6M16X70	PEP.INE16X6M16X70	16	6,5	23,5	15	M16	70	117
PEP.INE16X6M16X90	PEP.INE16X6M16X90	16	6,5	23,5	15	M16	90	143
PEP.INE16X6M16X110	PEP.INE16X6M16X110	16	6,5	23,5	15	M16	110	168
PEP.INE16X6M16X130	PEP.INE16X6M16X130	16	6,5	23,5	15	M16	130	194
PEP.INE16X6M16X150	PEP.INE16X6M16X150	16	6,5	23,5	15	M16	150	219
PEP.INE16X6M16X170	PEP.INE16X6M16X170	16	6,5	23,5	15	M16	170	247
PEP.INE16X6M16X190	PEP.INE16X6M16X190	16	6,5	23,5	15	M16	190	275

Customised stud length available for a minimum of 100 pieces.

PEPVZTM

+200° -40° AVP RoHS COMPLIANT

16 GALVANISED STEEL THREADED STEM TYPE B - WITH MILLED SEAT FOR WRENCH - TURNED

Steli Filettati

Materials:
Free-cutting steel (39SMnPb36).

Surface finish:
Smooth.

Colour:
Blue galvanising.

Thread:
Turned stem with milled seat for wrench (type B) with rolled thread (thread tolerance 6g).

Special requests:
Upon request and for special quantities the length and geometry of the inserts can be supplied to customer's drawing.

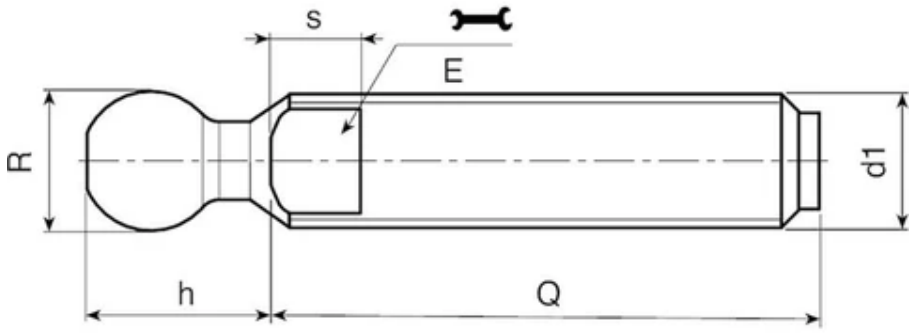

Version M16 with ball 12.4

Code	Art.	E	h	s	R ±0,1	d1 6g	Q	Weight (g)
PEP.VZTM16X70Z3	PEP.VZTM16X70Z3	13	15	7	12.4	M16	70	98
PEP.VZTM16X90Z3	PEP.VZTM16X90Z3	13	15	7	12.4	M16	90	124
PEP.VZTM16X110Z3	PEP.VZTM16X110Z3	13	15	7	12.4	M16	110	150
PEP.VZTM16X130Z3	PEP.VZTM16X130Z3	13	15	7	12.4	M16	130	176
PEP.VZTM16X150Z3	PEP.VZTM16X150Z3	13	15	7	12.4	M16	150	202
PEP.VZTM16X170Z3	PEP.VZTM16X170Z3	13	15	7	12.4	M16	170	228

These stems are compatible with the following foot bases: • PIE.040S12,4 • PIE.050S12,4 • PIE.060S12,4 • PIE.080S12,4 • PIE.700080S125
Customised stud length available for a minimum of 100 pieces.

Version M20-M24 with ball 15

Code	Art.	E	h	s	R	d1 6g	Q	Weight (g)
PEP.VZTM20X50Z3	PEP.VZTM20X50Z3	16	17	7	15	M20	50	142
PEP.VZTM20X70Z3	PEP.VZTM20X70Z3	16	17	7	15	M20	70	174
PEP.VZTM20X90Z3	PEP.VZTM20X90Z3	16	17	7	15	M20	90	206
PEP.VZTM20X110Z3	PEP.VZTM20X110Z3	16	17	7	15	M20	110	238
PEP.VZTM20X130Z3	PEP.VZTM20X130Z3	16	17	7	15	M20	130	270
PEP.VZTM20X150Z3	PEP.VZTM20X150Z3	16	17	7	15	M20	150	305
PEP.VZTM20X170Z3	PEP.VZTM20X170Z3	16	17	7	15	M20	170	337
PEP.VZTM20X190Z3	PEP.VZTM20X190Z3	16	17	7	15	M20	190	370

Code	Art.	E	h	s	R	d1 6g	Q	Weight (g)
PEP.VZTM20X210Z3	PEP.VZTM20X210Z3	16	17	7	15	M20	210	405
PEP.VZTM24X150Z3	PEP.VZTM24X150Z3	19	17	8	15	M24	150	510
PEP.VZTM24X170Z3	PEP.VZTM24X170Z3	19	17	8	15	M24	170	570
PEP.VZTM24X190Z3	PEP.VZTM24X190Z3	19	17	8	15	M24	190	630
PEP.VZTM24X210Z3	PEP.VZTM24X210Z3	19	17	8	15	M24	210	690

These stems are compatible with the following foot bases: • PIE.060S15 • PIE.080S15 • PIE.105S15 • PIE.130S15 • PIE.700080S15
Customised stud length available for a minimum of 100 pieces.

Version M24-M30 with ball 24

Code	Art.	E	h	s	R	d1 6g	Q	Weight (g)
PEP.VZTM24X110Z5	PEP.VZTM24X110Z5	19	27	10	24	M24	110	390
PEP.VZTM24X130Z5	PEP.VZTM24X130Z5	19	27	10	24	M24	130	450
PEP.VZTM24X150Z5	PEP.VZTM24X150Z5	19	27	10	24	M24	150	510
PEP.VZTM24X170Z5	PEP.VZTM24X170Z5	19	27	10	24	M24	170	570
PEP.VZTM30X110Z5	PEP.VZTM30X110Z5	27	27	11	24	M30	110	550
PEP.VZTM30X130Z5	PEP.VZTM30X130Z5	27	27	11	24	M30	130	637
PEP.VZTM30X150Z5	PEP.VZTM30X150Z5	27	27	11	24	M30	150	725
PEP.VZTM30X170Z5	PEP.VZTM30X170Z5	27	27	11	24	M30	170	813
PEP.VZTM30X190Z5	PEP.VZTM30X190Z5	27	27	11	24	M30	190	900
PEP.VZTM30X210Z5	PEP.VZTM30X210Z5	27	27	11	24	M30	210	990

These stems are compatible with the following foot bases: • PIE.080S24 • PIE.105S24 • PIE.130S24 • PIE.700080S24
Customised stud length available for a minimum of 100 pieces.

PIE.40-50-60

UPDATE | ESD | +135° -30° | PA6 +G.F. | RoHS COMPLIANT

16 SMALL MOUNTING FOOT BASE (40-50-60)

Basi in plastica

Note: Questo articolo è prodotto con materiale additivato ESD-C (Electro Static Discharge – Conductive) secondo la norma EN 100015/1 e IEC 61340-5-1. Il prodotto risulta conduttivo e previene la formazione di scariche elettrostatiche facilitandone il passaggio a terra. Una tampografia in colore giallo (ESD-C) aiuta la sua identificazione. Prodotto adatto per linee di produzione di materiale elettronico e per uso su atmosfere esplosive.

Materials:

PIE.40-50-60:

Reinforced polyamide. Resistant to oils and greases.

PIE.40-50-60ESD:

Reinforced polyamide, with conductive fillers (ESD-C). Resistant to oils and greases.

Surface finish:

Satin.

Colour:

Black (RAL 9011).

Special requests:

PIE.40-50-60: Upon request and for special quantities the foot can be supplied in Orange (RAL 2004).

PIE.40-50-60ESD: None.

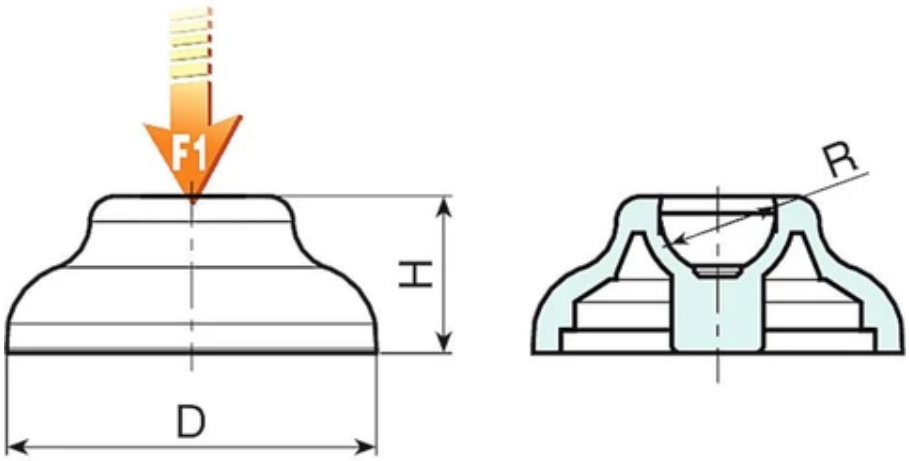

Standard version

Code	Art.	D	H	R	Weight (g)	F1 (N)
PIE.040S12.4	PIE.040S12.4	40	17	12.4	12	10000
PIE.040S15	PIE.040S15	40	17	15	12	10000
PIE.050S12.4	PIE.050S12.4	50	18	12.4	16	10000
PIE.050S15	PIE.050S15	50	18	15	16	10000
PIE.060S12.4	PIE.060S12.4	60	20	12.4	25	10000
PIE.060S15	PIE.060S15	60	20	15	24	15000
PIE.060S24	PIE.060S24	60	20	24	24	15000

Version ESD

Code	Art.	D	H	R	Weight (g)	F1 (N)
PIE.040S12.4ESD	PIE.040S12.4ESD	40	17	12.4	12	10000
PIE.040S15ESD	PIE.040S15ESD	40	17	15	12	10000
PIE.050S12.4ESD	PIE.050S12.4ESD	50	18	12.4	16	10000
PIE.050S15ESD	PIE.050S15ESD	50	18	15	16	10000
PIE.060S12.4ESD	PIE.060S12.4ESD	60	20	12.4	25	10000
PIE.060S15ESD	PIE.060S15ESD	60	20	15	24	15000
PIE.060S24ESD	PIE.060S24ESD	60	20	24	24	15000

PIE.700080

UPDATE | +135° -30° | PA6 +G.F. | RoHS COMPLIANT

16 TEARDROP MOUNTING FOOT BASE WITH LATERAL GROUND FIXING

Basi in plastica

Note: Questo articolo è prodotto con materiale additivato ESD-C (Electro Static Discharge – Conductive) secondo la norma EN 100015/1 e IEC 61340-5-1. Il prodotto risulta conduttivo e previene la formazione di scariche elettrostatiche facilitandone il passaggio a terra. Una tampografia in colore giallo (ESD-C) aiuta la sua identificazione. Prodotto adatto per linee di produzione di materiale elettronico e per uso su atmosfere esplosive.

Materials:

PIE.700080:

Reinforced polyamide. Resistant to oils and greases.

PIE.700080ESD:

Reinforced polyamide, with conductive fillers (ESD-C). Resistant to oils and greases.

Surface finish:

Satin.

Colour:

Black (RAL 9011).

Special requests:

PIE.700080: Upon request and for special quantities the foot can be supplied in Orange (RAL 2004).

PIE.700080ESD: None.

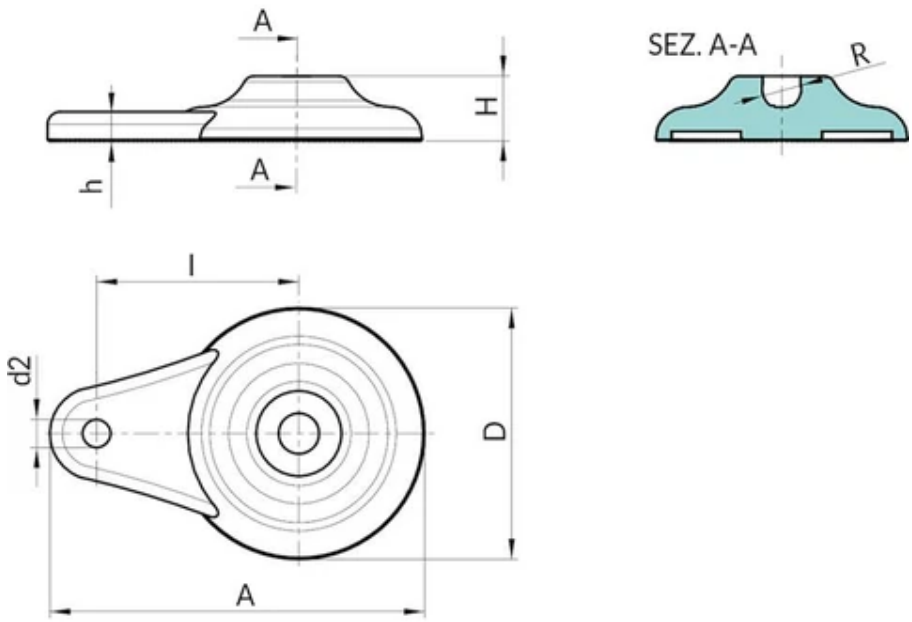

Standard version

Code	Art.	D	H	h	A	d2	l	R	Weight (g)	F1 (N)
PIE.700080S125	PIE.700080S125	80	20	9	120	9,5	65	12,4	58	10.000
PIE.700080S15	PIE.700080S15	80	20	9	120	9,5	65	15	57	13.000
PIE.700080S24	PIE.700080S24	80	20	9	120	9,5	65	24	56	25.000

Version ESD

Code	Art.	D	H	h	A	d2	l	R	Weight (g)	F1 (N)
PIE.700080S125ESD	PIE.700080S125ESD	80	20	9	120	9,5	65	12,4	58	10.000
PIE.700080S15ESD	PIE.700080S15ESD	80	20	9	120	9,5	65	15	57	13.000
PIE.700080S24ESD	PIE.700080S24ESD	80	20	9	120	9,5	65	24	56	25.000

PIE.80-105-130

+135° -30° | ESD | UPDATE | PA6 +G.F. | RoHS COMPLIANT

16 MOUNTING FOOT BASE WITH GROUND FIXING (80-105-130)

Basi in plastica

Note: Questo articolo è prodotto con materiale additivato ESD-C (Electro Static Discharge – Conductive) secondo la norma EN 100015/1 e IEC 61340-5-1. Il prodotto risulta conduttivo e previene la formazione di scariche elettrostatiche facilitandone il passaggio a terra. Una tampografia in colore giallo (ESD-C) aiuta la sua identificazione. Prodotto adatto per linee di produzione di materiale elettronico e per uso su atmosfere esplosive.

Materials:

PIE.80-105-130:

Reinforced polyamide. Resistant to oils and greases.

PIE.80-105-130ESD:

Reinforced polyamide, with conductive fillers (ESD-C). Resistant to oils and greases.

Surface finish:

Satin.

Colour:

Black (RAL 9011).

Ground fixing:

The mounting foot is supplied with closed holes for anchoring to the ground. To open them pierce the plastic membrane (see drawing).

Special requests:

PIE.80-105-130: Upon request and for special quantities the foot can be supplied in Orange (RAL 2004).

PIE.80-105-130ESD: None.

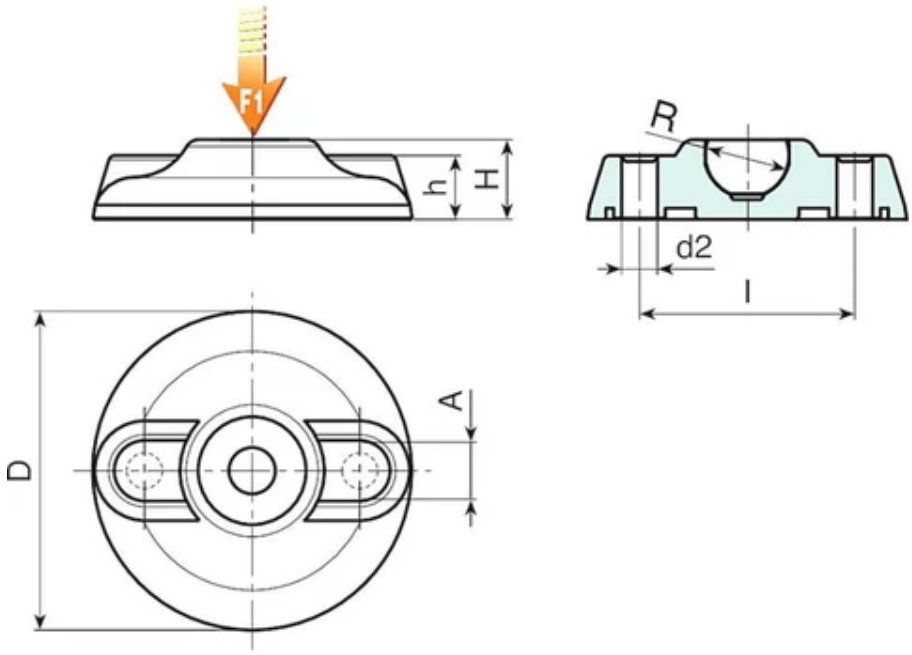

Standard version

Code	Art.	D	H	R	Weight (g)	F1 (N)
PIE.080S12.4	PIE.080S12.4	80	20	12,4	49	10
PIE.080S15	PIE.080S15	80	20	15	45	13
PIE.080S24	PIE.080S24	80	20	24	47,5	25
PIE.105S15	PIE.105S15	105	22	15	99	15
PIE.105S24	PIE.105S24	105	22	24	97	25
PIE.130S15	PIE.130S15	130	24	15	165	17
PIE.130S24	PIE.130S24	130	24	24	163	25

Version ESD

Code	Art.	D	H	R	Weight (g)	F1 (N)
PIE.080S12.4ESD	PIE.080S12.4ESD	80	20	12,4	49	10
PIE.080S15ESD	PIE.080S15ESD	80	20	15	45	13
PIE.080S24ESD	PIE.080S24ESD	80	20	24	47,5	25
PIE.105S15ESD	PIE.105S15ESD	105	22	15	99	15
PIE.105S24ESD	PIE.105S24ESD	105	22	24	97	25
PIE.130S15ESD	PIE.130S15ESD	130	24	15	165	17
PIE.130S24ESD	PIE.130S24ESD	130	24	24	163	25

PIE.ANT700

+110° -20° SBS RoHS COMPLIANT

16 NON-SLIP BASE FOR TEARDROP MOUNTING FOOT BASE WITH LATERAL FIXING

Basi in plastica

Materials:
Thermoplastic rubber SBS 75 Shore (only in black RAL 9011).
Resistant to oils and greases.

Surface finish:
Smooth.

Colour:
Black (RAL 9011).

Assembly:
Push-fit, with glue.

Special requests:
None.

Code	Art.	FOR FOOT BASE	D	H	A	Weight (g)
PIE.ANT700080S121524SBS	PIE.ANT700080S121524SBS	PIE.700080S125 - PIE.700080S15 - PIE.700080S24	76	5,5	115,5	23

PIEANT

+80° -20° | PP +SBS | RoHS COMPLIANT

16 NON-SLIP BASE FOR MOUNTING FOOT BASE (40-50-60-80-105-130)

Basi in plastica

Materials:
Thermoplastic rubber SBS 75 Shore (only in black RAL 9011).
Resistant to oils and greases.

Surface finish:
Smooth.

Colour:
Black (RAL 9011).

Assembly:
Push-fit.

Special requests:
On request the non-slip base can be glued on.

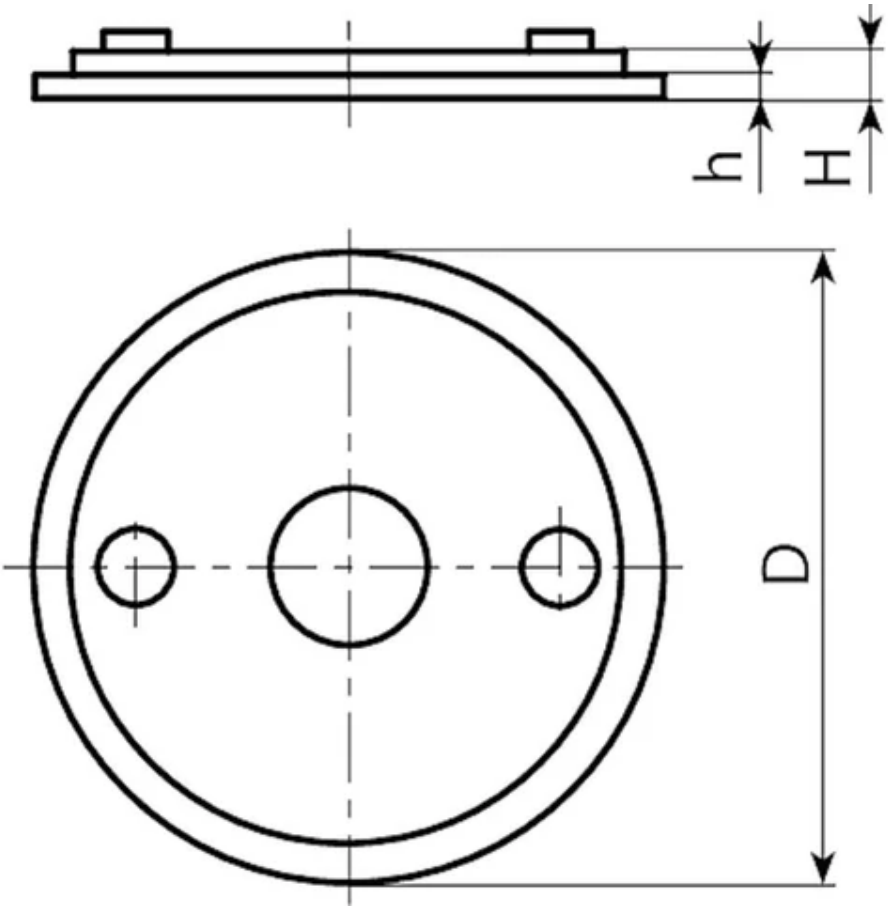

Code	Art.	FOR FOOT BASE	D	H	h	Weight (g)
PIE.ANT040S12.5SBS	PIE.ANT040S12.5SBS	PIE.040S12.4	38	8,5	3	5
PIE.ANT050S12.5SBS	PIE.ANT050S12.5SBS	PIE.050S12.4	48	8,5	5	6.5
PIE.ANT060S12.5SBS	PIE.ANT060S12.5SBS	PIE.060S12.4 - PIE.060S15	58	8,5	5	10
PIE.ANT080S1215SBS	PIE.ANT080S1215SBS	PIE.080S12,4 - PIE.080S	76	9,5	5,5	17
PIE.ANT080S24SBS	PIE.ANT080S24SBS	PIE.080S24	76	9,5	5,5	25
PIE.ANT105S15SBS	PIE.ANT105S15SBS	PIE.105S15	100	9	5,5	33
PIE.ANT105S24SBS	PIE.ANT105S24SBS	PIE.105S24	100	9	5,5	69
PIE.ANT130S15SBS	PIE.ANT130S15SBS	PIE.130S15	125	9	5,5	74
PIE.ANT130S24SBS	PIE.ANT130S24SBS	PIE.130S24	125	9	5,5	112