L250CIN

+200° -40° | Aisi 304 | RoHS COMPLIANT

12 FULL STAINLESS STEEL WING NUT WITH FEMALE THREADED HOLE

Galletti in acciaio

Materials:
Precision-cast stainless steel, (Aisi 304).

Surface finish:
Satin.

Colour:
Natural

Hole:
Female threaded hole, obtained by further processing (thread tolerance 6H).

Special Requests:
Upon request and for special quantities the wing nut can be supplied in Aisi 316 stainless steel.

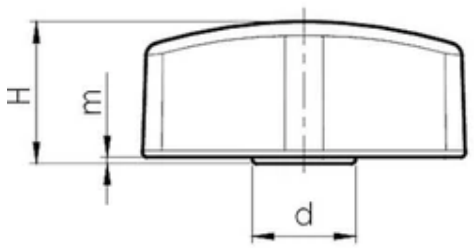

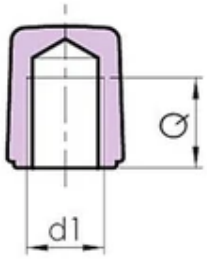

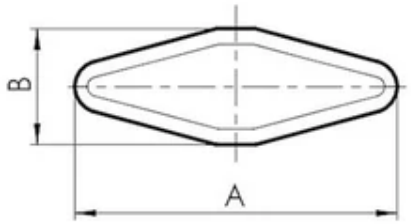

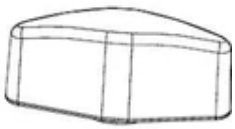

Code	Art.	A	B	H	m	d	d1 6H	Q	Weight (g)
L25025.0001	L25025.HM06CIN	25	9	11	0,5	8	M6	6	8
L25030.0001	L25030.HM08CIN	30	11	13.5	0,5	10	M8	8	16

Code	Art.	A	B	H	m	d	d1 6H	Q	Weight (g)
L25036.0001	L25036.HM10CIN	36	13	15.5	0,5	12	M10	9	27

L251CIN

+200° -40° | Aisi 304 | RoHS COMPLIANT

12

FULL STAINLESS STEEL WING NUT WITH THREADED STUD

Galletti in acciaio

Materials:

Precision-cast stainless steel, (Aisi 304).

Surface finish:

Satin.

Colour:

Natural

Inserts:

Stainless steel threaded stud (Aisi 303) (thread tolerance 6g).

ATTENTION: The stud is fixed with glue.

Special Requests:

Upon request and for special quantities inserts can be supplied with customised lengths.

Upon request and for special quantities the wing nut can be supplied in Aisi 316 stainless steel.

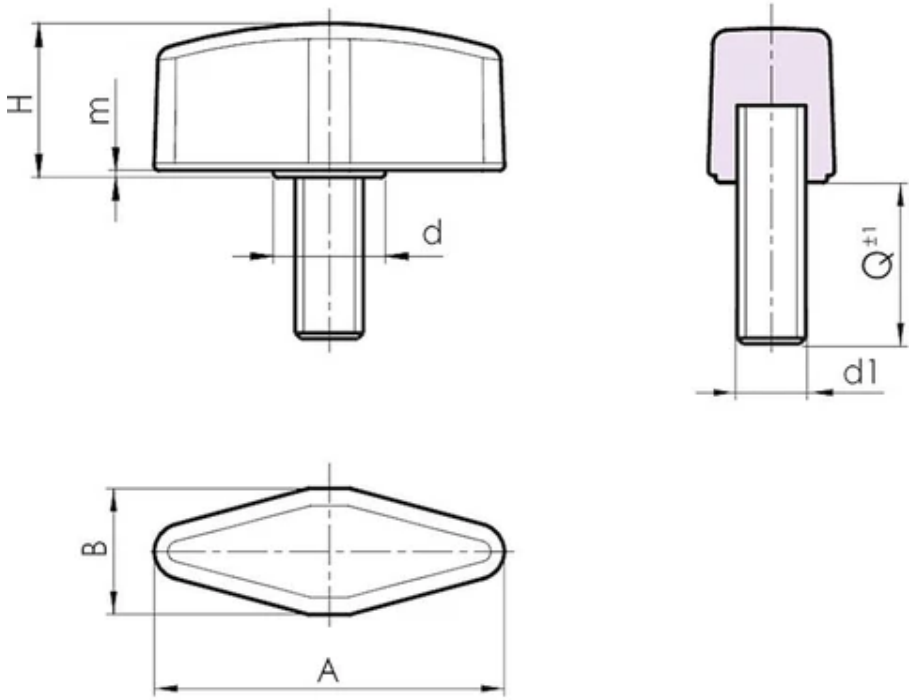

Code	Art.	A	B	H	m	d	d1 6g	Q	Weight (g)
L25125.0002	L25125.HM06X16CIN	25	9	11	0,5	8	M6	16	11

Code	Art.	A	B	H	m	d	d1 6g	Q	Weight (g)
L25125.0003	L25125.HM06X20CIN	25	9	11	0,5	8	M6	20	12
L25125.0004	L25125.HM06X25CIN	25	9	11	0,5	8	M6	25	13
L25130.0001	L25130.HM08X16CIN	30	11	13.5	0,5	10	M8	16	22
L25130.0002	L25130.HM08X20CIN	30	11	13.5	0,5	10	M8	20	24
L25130.0003	L25130.HM08X25CIN	30	11	13.5	0,5	10	M8	25	26
L25130.0004	L25130.HM08X32CIN	30	11	13.5	0,5	10	M8	32	29
L25136.0001	L25136.HM10X20CIN	36	13	15.5	0,5	12	M10	20	41
L25136.0002	L25136.HM10X30CIN	36	13	15.5	0,5	12	M10	30	46
L25136.0003	L25136.HM10X40CIN	36	13	15.5	0,5	12	M10	40	50

Customised stud length available for a minimum of 100 pieces.

L270

+135° -30° | PA6 +G.F. | RoHS COMPLIANT

12 T-HANDLE WITH THREADED INSERT

Tiranti

The T-handle with insert with female threaded hole is designed for two uses: the first and most important, given the design, is the push-pull mode. That is, connected to a shaft and 'pulled' or 'pushed'. The second is a combination of rotation and push/pull. The handle is solid, without cavities, so it is also suitable for the food and medical sector. Several versions of the product are available such as with stainless steel insert or thread on the plastic without insert. Suitable for special uses where a metal-free product is required. Its use is a little more limited than other more universal handles. Indeed, it is mainly used on hand tools, automotive equipment, woodworking machines and a wide range of sports or gym equipment. The L270 T-handle is made from reinforced polyamide based materials. Also available with smooth bore or threaded stud insert.

Materials:

Reinforced polyamide.

Resistant to oils and greases.

Surface finish:

Satin.

Colour:

Black:	(RAL 9011 code 01).
Orange:	(RAL 2004 code 02).
Red:	(RAL 3000 code 16).

Inserts:

Brass insert with female threaded hole (thread tolerance 6H).

Special Requests:

Upon request and for special quantities inserts can be supplied in different materials.

Upon request and for special quantities available in the colours indicated in the chart.

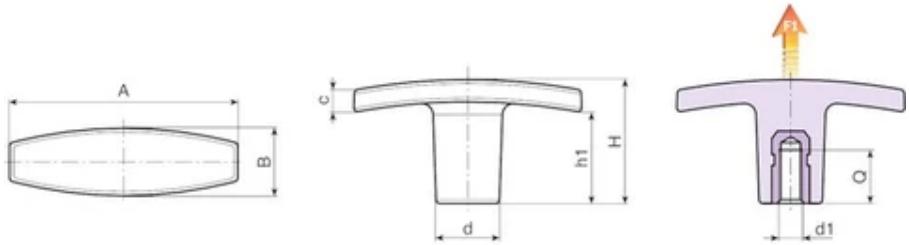

Version L270 - 01 Black T-handle (RAL 9001 code 01)

Code	Art.	A	B	H	h1	c	d	d1 6H	Q	Weight (g)	F1 (N)
L27050.0002	L27050.TM0501	50	15	24	17	5	14	M5	12	13	4100
L27050.0009	L27050.TM0601	50	15	24	17	5	14	M6	10	11	4100
L27050.0015	L27050.TM0801	50	15	24	17	5	14	M8	14	12	4100
L27060.0003	L27060.TM0501	60	18	33	24	6	16.5	M5	12	19	5800
L27060.0006	L27060.TM0601	60	18	33	24	6	16.5	M6	10	16.5	5800
L27060.0010	L27060.TM0801	60	18	33	24	6	16.5	M8	14	17.5	5800
L27060.0014	L27060.TM1001	60	18	33	24	6	16.5	M10	21	21	5800
L27072.0003	L27072.TM0601	72	19	34	20	10	18	M6	15	25	6500
L27072.0006	L27072.TM0801	72	19	34	20	10	18	M8	20	28	6500
L27072.0010	L27072.TM1001	72	19	34	20	10	18	M10	21	30	6500
L27072.0017	L27072.TM1201	72	19	34	20	10	18	M12	17	30	6500

Version L270 - 02 Orange T-handle (RAL 2004 code 02)

Code	Art.	A	B	H	h1	c	d	d1 6H	Q	Weight (g)	F1 (N)
L27050.0012	L27050.TM0602	50	15	24	17	5	14	M6	10	11	4100
L27060.0012	L27060.TM0802	60	18	33	24	6	16.5	M8	14	17.5	5800
L27072.0013	L27072.TM1002	72	19	34	20	10	18	M10	21	30	6500

Version L270 - 16 Red T-handle (RAL 3000 code 16)

Code	Art.	A	B	H	h1	c	d	d1 6H	Q	Weight (g)	F1 (N)
L27050.0006	L27050.TM0516	50	15	24	17	5	14	M5	12	13	4100
L27050.0014	L27050.TM0616	50	15	24	17	5	14	M6	10	11	4100
L27060.0013	L27060.TM0816	60	18	33	24	6	16.5	M8	14	17.5	5800
L27072.0015	L27072.TM1016	72	19	34	20	10	18	M10	21	30	6500

L270CIN

+135° -30° | PA6 +G.F. | RoHS COMPLIANT

12

T-HANDLE WITH STAINLESS STEEL THREADED INSERT

Tiranti

Materials:

Reinforced polyamide.

Resistant to oils and greases.

Surface finish:

Satin.

Colour:

Black (RAL 9011).

Inserts:

Stainless steel insert with female threaded hole (Aisi 303) (thread tolerance 6H).

Special Requests:

Upon request and for special quantities available in the colours indicated in the chart.

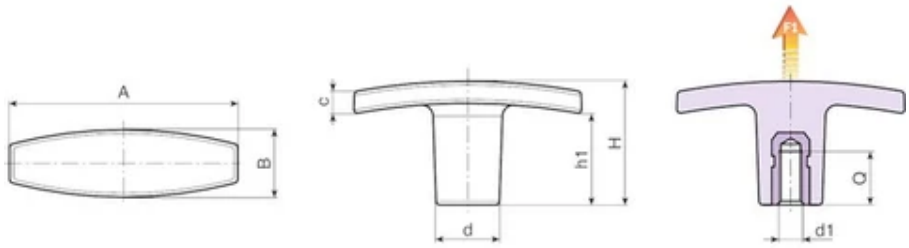

Code	Art.	A	B	H	h1	c	d	d1 6H	Q	Weight (g)	F1 (N)
L27050.0003	L27050.TM0501CIN	50	15	24	17	5	14	M5	9	14	4100
L27050.0010	L27050.TM0601CIN	50	15	24	17	5	14	M6	9	14	4100

Code	Art.	A	B	H	h1	c	d	d1 6H	Q	Weight (g)	F1 (N)
L27050.0016	L27050.TM0801CIN	50	15	24	17	5	14	M8	12	16	4100
L27060.0007	L27060.TM0601CIN	60	18	33	24	6	16.5	M6	9	20	5800
L27060.0011	L27060.TM0801CIN	60	18	33	24	6	16.5	M8	12	21	5800
L27060.0015	L27060.TM1001CIN	60	18	33	24	6	16.5	M10	18	24	5800
L27072.0007	L27072.TM0801CIN	72	19	34	20	10	18	M8	19	32	6500
L27072.0011	L27072.TM1001CIN	72	19	34	20	10	18	M10	18	33	6500
L27072.0018	L27072.TM1201CIN	72	19	34	20	10	18	M12	15	34	6500

L271

+135° -30° | PA6 +G.F. | RoHS COMPLIANT

12 T-HANDLE WITH THREADED STUD

Tiranti

Materials:

Reinforced polyamide.

Resistant to oils and greases.

Surface finish:

Satin.

Colour:

Black (RAL 9011).

Inserts:

L271:

Galvanised steel threaded stud (thread tolerance 6g).

L271CIN:

Stainless steel threaded stud. (Aisi 303), (thread tolerance 6g).

Special Requests:

Upon request and for special quantities inserts can be supplied with customised lengths.

Upon request and for special quantities inserts can be supplied in different materials.

Upon request and for special quantities available in the colours indicated in the chart (attention: reduced range).

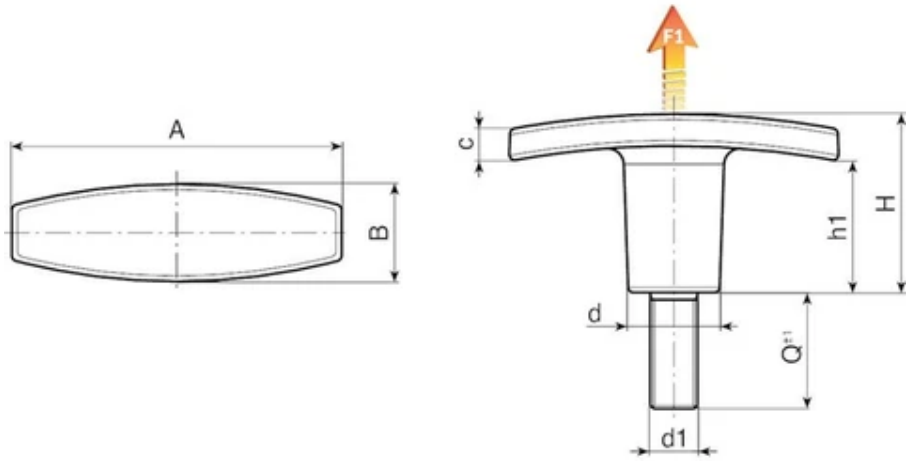

Version L271: with galvanised steel insert.

Code	Art.	A	B	H	h1	c	d	LM	d1 6g	Q	Weight (g)	F1 (N)
L27150.0003	L27150.TM05X2001	50	15	24	17	5	14	30	M5	20	13	4100
L27150.0004	L27150.TM05X3001	50	15	24	17	5	14	30	M5	30	14	4100
L27150.0010	L27150.TM06X1501	50	15	24	17	5	14	30	M6	15	14,5	4100
L27150.0011	L27150.TM06X2001	50	15	24	17	5	14	30	M6	20	15	4100
L27150.0012	L27150.TM06X3001	50	15	24	17	5	14	30	M6	30	16,5	4100
L27150.0014	L27150.TM06X4001	50	15	24	17	5	14	30	M6	40	18	4100
L27160.0003	L27160.TM05X1501	60	18	33	24	6	16.5	30	M5	15	20	4100
L27160.0004	L27160.TM05X2001	60	18	33	24	6	16.5	30	M5	20	21	4100
L27160.0005	L27160.TM05X3001	60	18	33	24	6	16.5	30	M5	30	20-21	4100
L27160.0009	L27160.TM06X2001	60	18	33	24	6	16.5	30	M6	20	23	5800
L27160.0011	L27160.TM06X3001	60	18	33	24	6	16.5	30	M6	30	25	5800
L27160.0016	L27160.TM08X2001	60	18	33	24	6	16.5	30	M8	20	28	5800
L27160.0019	L27160.TM08X3001	60	18	33	24	6	16.5	30	M8	30	31	5800
L27160.0020	L27160.TM08X4001	60	18	33	24	6	16.5	30	M8	40	34	5800
L27160.0024	L27160.TM10X2001	60	18	33	24	6	16.5	30	M10	20	30	5800
L27160.0025	L27160.TM10X3001	60	18	33	24	6	16.5	30	M10	30	35	5800
L27160.0027	L27160.TM10X4001	60	18	33	24	6	16.5	30	M10	40	30-35	5800
L27172.0003	L27172.TM06X2001	72	19	34	20	10	18	80	M6	20	30	6500
L27172.0005	L27172.TM06X3001	72	19	34	20	10	18	80	M6	30	32	6500
L27172.0006	L27172.TM06X4001	72	19	34	20	10	18	80	M6	40	34	6500
L27172.0009	L27172.TM08X2001	72	19	34	20	10	18	80	M8	20	39	6500

Code	Art.	A	B	H	h1	c	d	LM	d1 6g	Q	Weight (g)	F1 (N)
L27172.0012	L27172.TM08X3001	72	19	34	20	10	18	80	M8	30	42	6500
L27172.0015	L27172.TM08X4001	72	19	34	20	10	18	80	M8	40	45	6500
L27172.0021	L27172.TM10X3001	72	19	34	20	10	18	80	M10	30	56	6500
L27172.0027	L27172.TM10X4001	72	19	34	20	10	18	80	M10	40	61	6500
L27172.0033	L27172.TM12X3001	72	19	34	20	10	18	80	M12	30	58	6500
L27172.0034	L27172.TM12X4001	72	19	34	20	10	18	80	M12	40	64	6500
L27172.0035	L27172.TM12X5001	72	19	34	20	10	18	80	M12	50	71	6500

Threaded stud length on request, with a minimum quantity of 250 pieces.
LM = Maximum mouldable length.

Version L271CIN: with stainless steel insert (Aisi 303).

Code	Art.	A	B	H	h1	c	d	LM	d1 6g	Q	Weight (g)	F1 (N)
-	L27150.TM06X2001CIN	50	15	24	17	5	14	30	M6	20	15	4100

Threaded stud length on request, with a minimum quantity of 250 pieces.
LM = Maximum mouldable length.

L272

+135° -30° | PA6 +G.F. | RoHS COMPLIANT

12 T-HANDLE WITH PLASTIC THREADED HOLE

Tiranti

Materials:

Reinforced polyamide.

Resistant to oils and greases.

Surface finish:

Satin.

Colour:

Black (RAL 9011).

Hole:

Female threaded hole obtained by moulding the plastic (thread tolerance not applicable).

Special Requests:

Upon request and for special quantities available in the colours indicated in the chart.

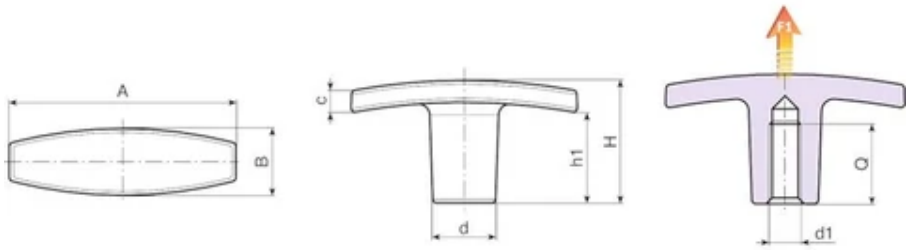

Code	Art.	A	B	H	h1	c	d	d1	Q	Weight (g)	F1 (N)
L27250.0003	L27250.TM0501	50	15	24	17	5	14	M5	20	8	2800
L27250.0004	L27250.TM0601	50	15	24	17	5	14	M6	20	8	2800
L27260.0006	L27260.TM0501	60	18	33,5	24	6	16.5	M5	19	14	3000
L27260.0007	L27260.TM0601	60	18	33,5	24	6	16.5	M6	19	14	3000
L27260.0008	L27260.TM0801	60	18	33,5	24	6	17	M8	19	14	3000
L27260.0009	L27260.TM1001	60	18	33,5	24	6	18	M10	19	13	3000
L27272.0004	L27272.TM0801	72	19	34	20	10	18	M8	21	20	4600
L27272.0006	L27272.TM1001	72	19	34	20	10	18	M10	21	20	4600
L27272.0007	L27272.TM1201	72	19	34	20	10	18	M12	20	19	4600

L273

+135° -30° | PA6 +G.F. | RoHS COMPLIANT

12 T-HANDLE WITH INSERT AND SMOOTH BORE

Tiranti

Materials:

Reinforced polyamide.

Resistant to oils and greases.

Surface finish:

Satin.

Colour:

Black (RAL 9011).

Inserts:

Brass insert with blind smooth bore (bore tolerance H9).

ATTENTION: bore cannot be widened.

(*) Galvanised steel insert with blind smooth bore (bore tolerance H10).

Special Requests:

Upon request and for special quantities inserts can be supplied in different materials.

Upon request and for special quantities available in the colours indicated in the chart.

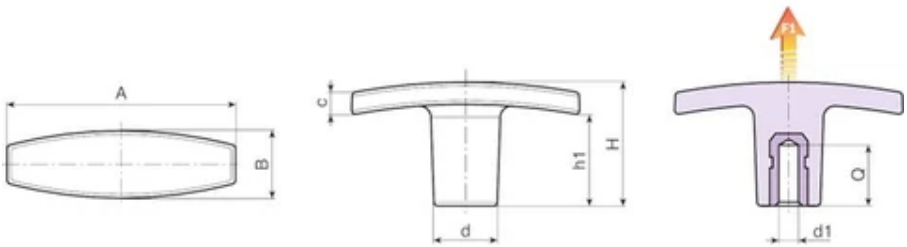

Code	Art.	A	B	H	h1	c	d	d1 H9	Q	Weight (g)	F1 (N)
L27350.0001	L27350.TD0601CON	50	15	24	17	5	14	6	14	12	4100
L27360.0001	L27360.TD0601CON	60	18	33	24	6	16.5	6	14	19	5800
L27360.0002	L27360.TD0801CON	60	18	33	24	6	16.5	8	13	21	5800
L27372.0002	L27372.TD0801CON	72	19	34	20	10	18	8	13	28	6500
L27372.0003	L27372.TD1001	72	19	34	20	10	18	(*) 10	24	30	6500

L274HIN

+200° -40° | Aisi 304 | RoHS COMPLIANT

12 FULL STAINLESS STEEL T-HANDLE WITH FEMALE THREADED HOLE

Tiranti in acciaio

Materials:

Precision-cast stainless steel, (Aisi 304).

Surface finish:

Satin.

Colour:

Natural

Hole:

Female threaded hole, obtained by further processing (thread tolerance 6H).

Special Requests:

Upon request and for special quantities the hole can be supplied to customer's drawing.

Upon request and for special quantities the T-handle can be supplied in Aisi 316 stainless steel.

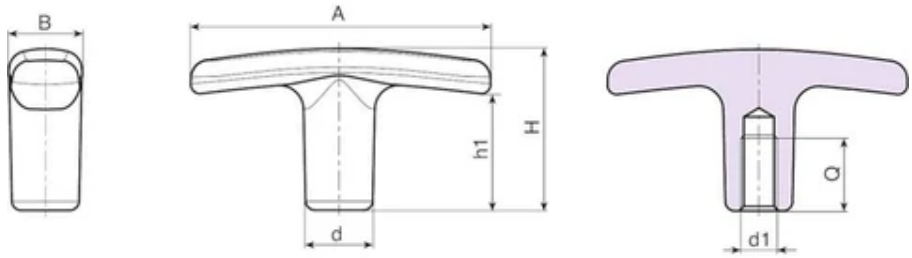

Code	Art.	A	B	H	h1	d	d1 6H	Q	Weight (g)
L27450.0001	L27450.HNM06HIN	50	12	27	19	11	M6	12	--

Code	Art.	A	B	H	h1	d	d1 6H	Q	Weight (g)
L27460.0001	L27460.HNM08HIN	60	14	34	24	13	M8	16	--
L27472.0001	L27472.HNM08HIN	72	16	40	30	15	M8	16	--
L27472.0002	L27472.HNM10HIN	72	16	40	30	15	M10	16	--

L275HIN

+200° -40° | Aisi 304 | Aisi 303 | RoHS COMPLIANT

12 FULL STAINLESS STEEL T-HANDLE WITH THREADED STUD

Tiranti in acciaio

Materials:

Knob:

Precision-cast stainless steel, (Aisi 304).

Stud:

Stainless steel (Aisi 303).

Surface finish:

Satin.

Colour:

Natural

Inserts:

Turned threaded stud (thread tolerance 6g).

ATTENTION: The stud is fixed with glue.

Special Requests:

Upon request and for a minimum of 50 pieces inserts can be supplied with customised lengths.

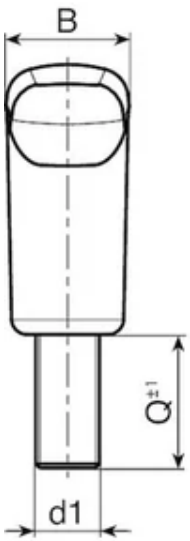

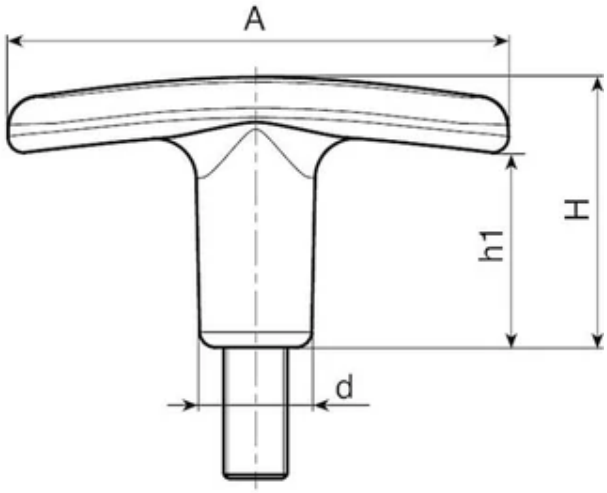

Code	Art.	A	B	H	h1	d	d1 6H	Q	Weight (g)
L27550.0001	L27550.HNM06X30HIN	50	12	27	19	11	M6	30	--
L27560.0001	L27560.HNM08X30HIN	60	14	34	24	13	M8	30	--
L27572.0001	L27572.HNM08X30HIN	72	16	40	30	15	M8	30	--
L27572.0002	L27572.HNM10X30HIN	72	16	40	30	15	M10	30	--

L747

+135° -30° | PA6 +G.F. | RoHS COMPLIANT

12

28 mm WING NUT WITH WITH THREADED HOLE INSERT

Galletti standard

Materials:

Reinforced polyamide.

Resistant to oils and greases.

Surface finish:

Satin.

Colour:

Black (RAL 9011).

Inserts:

Brass insert with female threaded hole (thread tolerance 6H).

Special Requests:

Upon request and for special quantities inserts can be supplied in different materials.

Upon request and for special quantities available in the colours indicated in the chart.

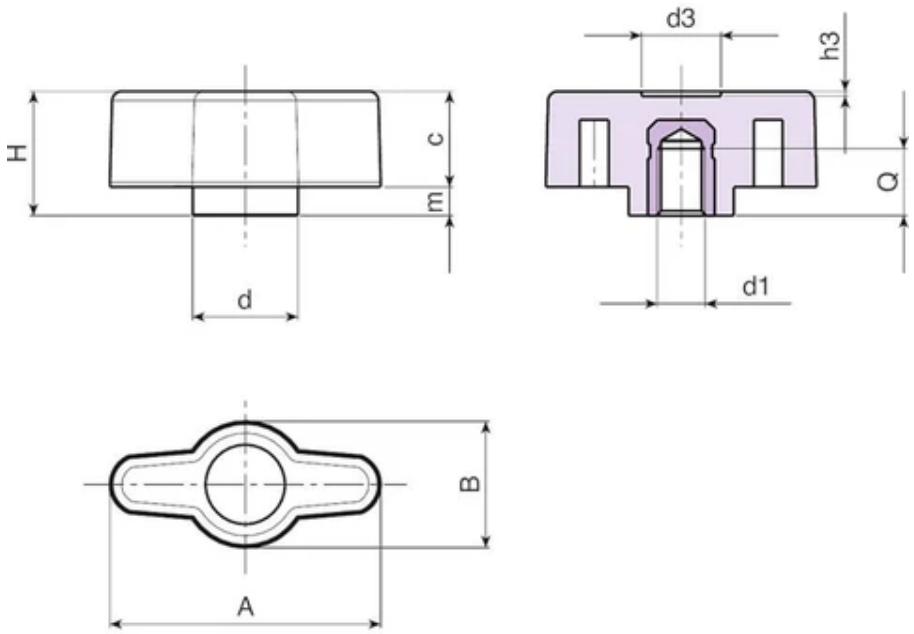

Code	Art.	A	B	H	m	c	d	d3	h3	d1 6H	Q	Weight (g)
L74728.0001	L74728.TM0401	28	13	13	3	10	11	8	0.5	M4	8	4

Code	Art.	A	B	H	m	c	d	d3	h3	d1 6H	Q	Weight (g)
L74728.0002	L74728.TM0501	28	13	13	3	10	11	8	0.5	M5	8	5
L74728.0003	L74728.TM0601	28	13	13	3	10	11	8	0.5	M6	8	6

L748

+135° -30° | PA6 +G.F. | RoHS COMPLIANT

12 28 mm WING NUT WITH WITH INSERT AND THREADED THROUGH HOLE

Galletti standard

Materials:

Reinforced polyamide.

Resistant to oils and greases.

Surface finish:

Satin.

Colour:

Black (RAL 9011).

Inserts:

Brass insert with threaded through hole (thread tolerance 6H).

Special Requests:

Upon request and for special quantities inserts can be supplied in different materials.

Upon request and for special quantities available in the colours indicated in the chart.

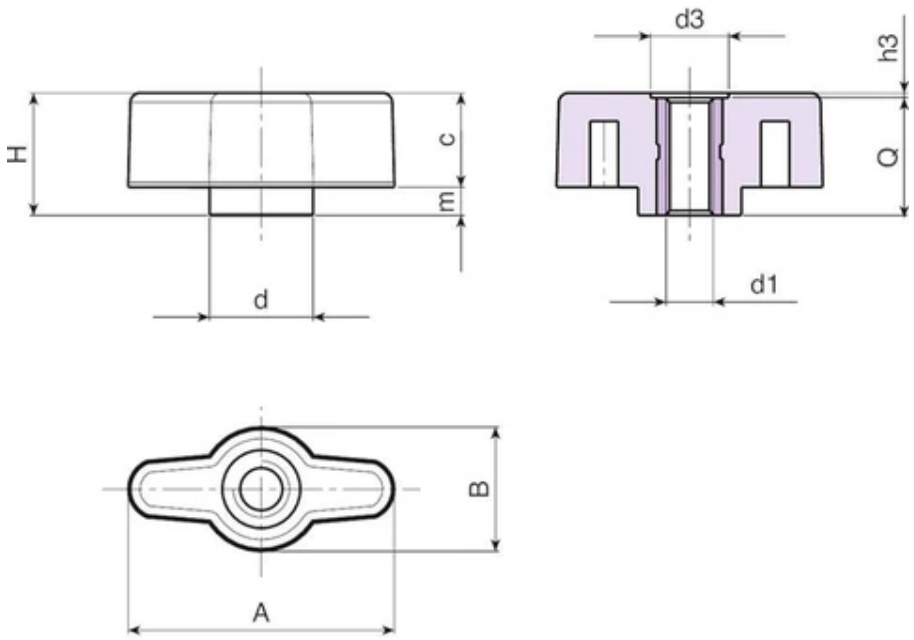

Code	Art.	A	B	H	m	c	d	d3	h3	d1 6H	Q	Weight (g)
L74828.0001	L74828.TM0401	28	13	13	3	10	11	8	0.5	M4	12.5	5
L74828.0002	L74828.TM0501	28	13	13	3	10	11	8	0.5	M5	12.5	5
L74828.0003	L74828.TM0601	28	13	13	3	10	11	8	0.5	M6	12.5	6

L749

+135° -30° | PA6 +G.F. | RoHS COMPLIANT

12

28 mm WING NUT WITH THREADED STUD

Galletti standard

Materials:

Reinforced polyamide.

Resistant to oils and greases.

Surface finish:

Satin.

Colour:

Black (RAL 9011).

Inserts:

Galvanised steel threaded stud (thread tolerance 6g).

Special Requests:

Upon request and for special quantities inserts can be supplied with customised lengths.

Upon request and for special quantities inserts can be supplied in different materials.

Upon request and for special quantities available in the colours indicated in the chart (attention: reduced range).

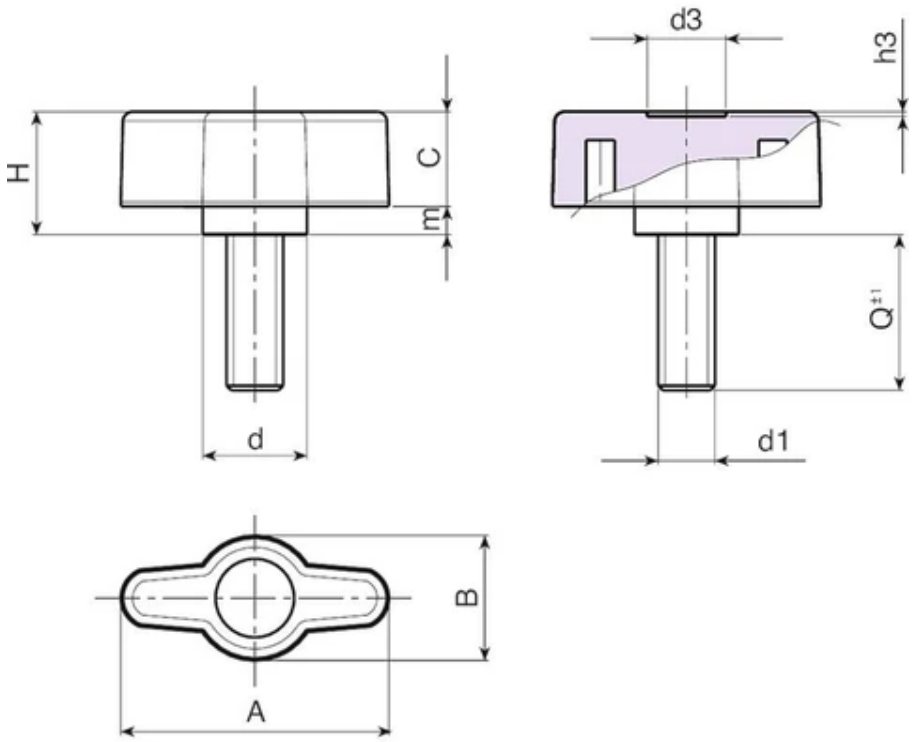

Code	Art.	A	B	H	m	c	d	d3	h3	LM	d1 6g	Q	Weight (g)
L74928.0024	L74928.TM06X4001	28	13	13	3	10	11	8	0.5	75	M6	40	11

Customised stud lengths available for a minimum of 150 pieces.
LM = Maximum mouldable length.

L750

+135° -30° | PA6 +G.F. | RoHS COMPLIANT

12 WING NUT WITH INSERT AND FEMALE THREADED HOLE

Galletti standard

Materials:
Reinforced polyamide.
Resistant to oils and greases.

Surface finish:
Satin.

Colour:
Black (RAL 9011).

Inserts:
L750:

Brass insert with female threaded hole (thread tolerance 6H).
L750CIN:

Stainless steel insert with female threaded hole (Aisi 303) (thread tolerance 6H).
Special Requests:

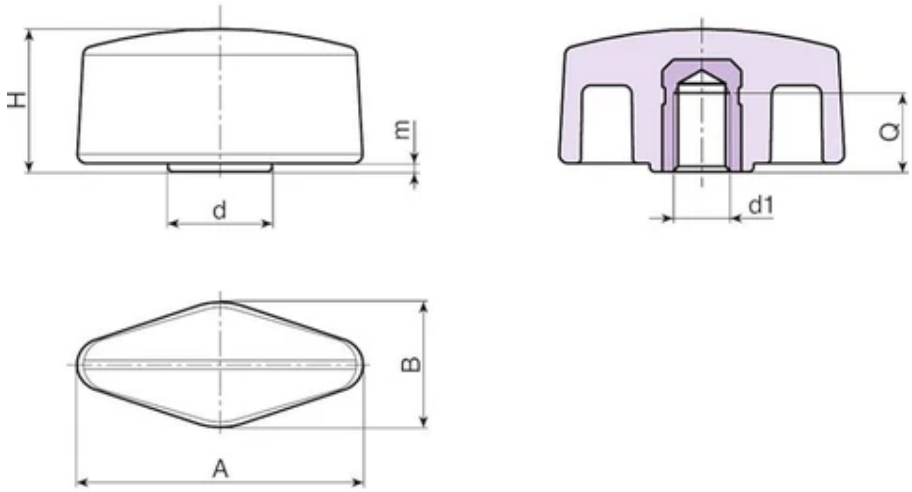

Version L750: brass insert.

Code	Art.	A	B	H	m	d	d1 6H	Q	Weight (g)
L75032.0001	L75032.TM0501	33	15	16.5	1	12	M5	7	7
L75032.0003	L75032.TM0601	33	15	16.5	1	12	M6	7	6
L75032.0007	L75032.TM0801	33	15	16.5	1	12	M8	7	6
L75048.0001	L75048.TM0601	48	15	16	1	12.5	M6	8	10
L75048.0002	L75048.TM0801	48	15	16	1	12.5	M8	8	10

Version L750CIN: stainless steel insert (Aisi 303).

Code	Art.	A	B	H	m	d	d1 6H	Q	Weight (g)
L75032.0002	L75032.TM0501CIN	33	15	16.5	1	12	M5	7	9
L75032.0004	L75032.TM0601CIN	33	15	16.5	1	12	M6	7	8
L75032.0008	L75032.TM0801CIN	33	15	16.5	1	12	M8	7	8
L75048.0003	L75048.TM0801CIN	48	15	16	1	12.5	M8	7	8

L751

+135° -30° | PA6 +G.F. | RoHS COMPLIANT

12

WING NUT WITH THREADED STUD

Galletti standard

Materials:

Reinforced polyamide.

Resistant to oils and greases.

Surface finish:

Satin.

Colour:

Black (RAL 9011).

Inserts:

L751:

Galvanised steel threaded stud (thread tolerance 6g).

L751CIN:

Stainless steel threaded stud (Aisi 303) (thread tolerance 6g).

Special Requests:

Upon request and for special quantities inserts can be supplied with customised lengths.

Upon request and for special quantities inserts can be supplied in different materials.

Upon request and for special quantities available in the colours indicated in the chart (attention: reduced range).

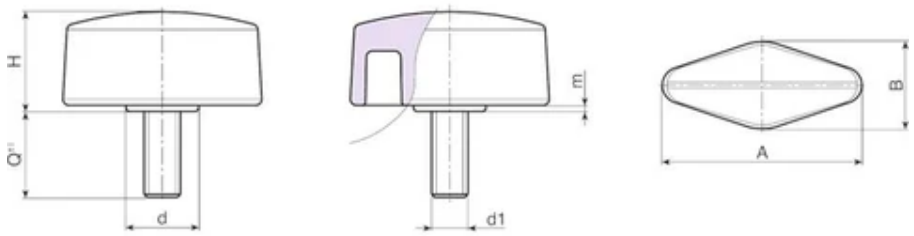

Version L751: with threaded stud in galvanised steel.

Code	Art.	A	B	H	m	d	LM	d1 6g	Q	Weight (g)
L75132.0006	L75132.TM05X1601	33	15	16.5	1	12	60	M5	16	8
L75132.0009	L75132.TM05X2501	33	15	16.5	1	12	60	M5	25	9
L75132.0011	L75132.TM05X3001	33	15	16.5	1	12	60	M5	30	11
L75132.0012	L75132.TM05X4001	33	15	16.5	1	12	60	M5	40	15
L75132.0017	L75132.TM06X1001	33	15	16.5	1	12	60	M6	10	9
L75132.0021	L75132.TM06X1601	33	15	16.5	1	12	60	M6	16	11
L75132.0029	L75132.TM06X2001	33	15	16.5	1	12	60	M6	20	12
L75132.0033	L75132.TM06X2501	33	15	16.5	1	12	60	M6	25	12
L75132.0036	L75132.TM06X3001	33	15	16.5	1	12	60	M6	30	12,5
L75132.0040	L75132.TM06X4001	33	15	16.5	1	12	60	M6	40	15,5
L75132.0047	L75132.TM08X1001	33	15	16.5	1	12	60	M8	10	13,5
L75132.0055	L75132.TM08X1601	33	15	16.5	1	12	60	M8	16	14,5
L75132.0061	L75132.TM08X2001	33	15	16.5	1	12	60	M8	20	16
L75132.0064	L75132.TM08X2501	33	15	16.5	1	12	60	M8	25	17,5
L75132.0067	L75132.TM08X3001	33	15	16.5	1	12	60	M8	30	19
L75132.0071	L75132.TM08X4001	33	15	16.5	1	12	60	M8	40	22
L75148.0001	L75148.TM06X1001	48	15	16	1	12.5	70	M6	10	13
L75148.0002	L75148.TM06X1601	48	15	16	1	12.5	70	M6	16	15
L75148.0003	L75148.TM06X2001	48	15	16	1	12.5	70	M6	20	16
L75148.0014	L75148.TM08X1601	48	15	16	1	12.5	70	M8	16	18
L75148.0016	L75148.TM08X2001	48	15	16	1	12.5	70	M8	20	20

Code	Art.	A	B	H	m	d	LM	d1 6g	Q	Weight (g)
L75148.0020	L75148.TM08X2501	48	15	16	1	12.5	70	M8	25	21,5
L75148.0021	L75148.TM08X3001	48	15	16	1	12.5	70	M8	30	23
L75148.0023	L75148.TM08X4001	48	15	16	1	12.5	70	M8	40	27

Customised stud length available for a minimum of 150 pieces.
LM = Maximum mouldable length.

Version L751 CIN - stainless steel insert (Aisi 303).

Code	Art.	A	B	H	m	d	LM	d1 6g	Q	Weight (g)
L75132.0018	L75132.TM06X1101CIN	33	15	16.5	1	12	60	M6	11	11
L75132.0022	L75132.TM06X1601CIN	33	15	16.5	1	12	60	M6	16	13
L75132.0037	L75132.TM06X3001CIN	33	15	16.5	1	12	60	M6	30	17
L75132.0057	L75132.TM08X1601CIN	33	15	16.5	1	12	60	M8	16	15

Threaded stud length on request, with a minimum quantity of 250 pieces.
LM = Maximum mouldable length.

L754

+135° -30° | PA6 +G.F. | RoHS COMPLIANT

12 LARGE WING NUT WITH THREADED HOLE INSERT

Galletti standard

Materials:

Reinforced polyamide.

Resistant to oils and greases.

Surface finish:

Satin.

Colour:

Black (RAL 9011).

Inserts:

Brass insert with female threaded hole (thread tolerance 6H).

Special Requests:

Upon request and for special quantities inserts can be supplied in different materials.

Upon request and for special quantities available in the colours indicated in the chart.

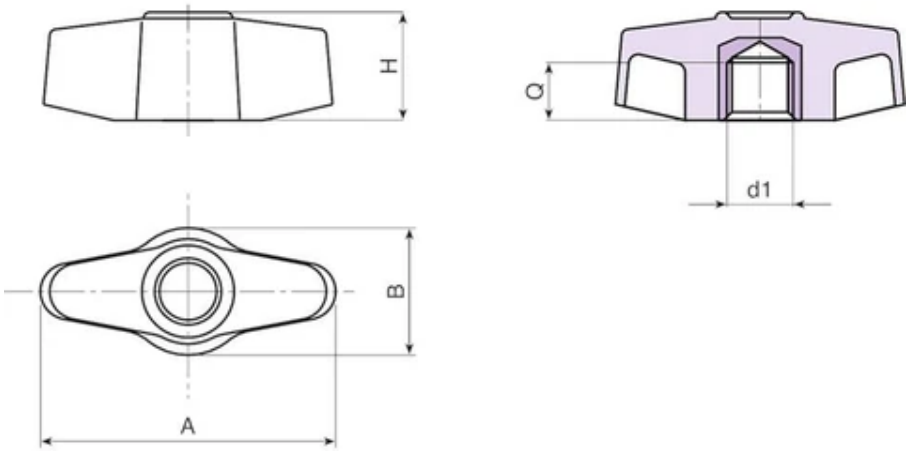

Code	Art.	A	B	H	d1 6H	Q	Weight (g)
L75448.0001	L75448.TM0601	45	20	17	M6	7	11

Code	Art.	A	B	H	d1 6H	Q	Weight (g)
L75448.0002	L75448.TM0801	45	20	17	M8	7	11
L75448.0005	L75448.TM1001	45	20	17	M10	6	12

L755

+135° -30° | PA6 +G.F. | RoHS COMPLIANT

12 LARGE WING NUT WITH INSERT AND THREADED THROUGH HOLE

Galletti standard

Materials:

Reinforced polyamide.

Resistant to oils and greases.

Surface finish:

Satin.

Colour:

Black (RAL 9011).

Inserts:

Galvanised steel insert with threaded through hole (thread tolerance 6H).

Special Requests:

Upon request and for special quantities inserts can be supplied in different materials.

Upon request and for special quantities available in the colours indicated in the chart (attention: reduced range).

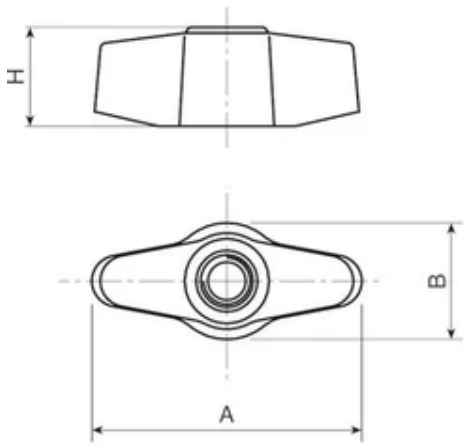

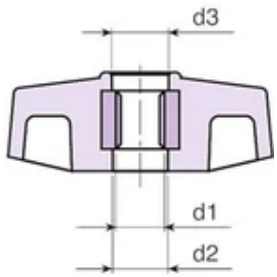

Code	Art.	A	B	H	d2	d3	d1 6H	Weight (g)
L75548.0001	L75548.TM0601	45	20	17	9.5	10	M6	17
L75548.0002	L75548.TM0801	45	20	17	9.5	10	M8	16

L756

+135° -30° | PA6 +G.F. | RoHS COMPLIANT

12

LARGE WING NUT WITH THREADED STUD

Galletti standard

Materials:

Reinforced polyamide.

Resistant to oils and greases.

Surface finish:

Satin.

Colour:

Black (RAL 9011).

Inserts:

Galvanised steel threaded stud (thread tolerance 6g).

Special Requests:

Upon request and for special quantities inserts can be supplied with customised lengths.

Upon request and for special quantities inserts can be supplied in different materials.

Upon request and for special quantities available in the colours indicated in the chart.

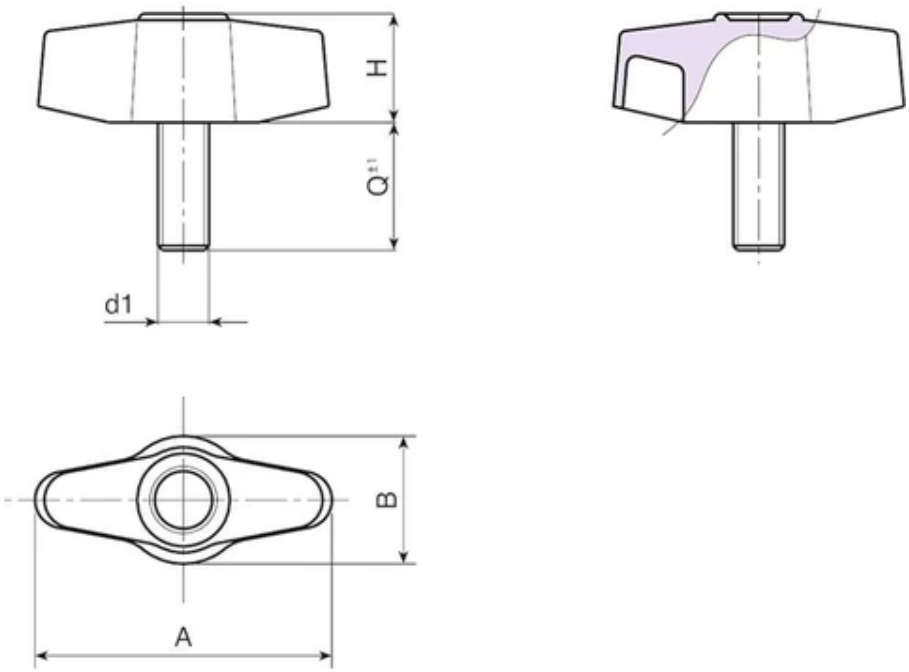

Code	Art.	A	B	H	LM	d1 6g	Q	Weight (g)
L75648.0004	L75648.TM06X1601	45	20	17	50	M6	16	14,5
L75648.0005	L75648.TM06X2001	45	20	17	50	M6	20	15
L75648.0013	L75648.TM08X1601	45	20	17	50	M8	16	17
L75648.0014	L75648.TM08X2001	45	20	17	50	M8	20	18,5
L75648.0016	L75648.TM08X2501	45	20	17	50	M8	25	20
L75648.0018	L75648.TM08X3001	45	20	17	50	M8	30	21,5
L75648.0021	L75648.TM08X3501	45	20	17	50	M8	35	23
L75648.0026	L75648.TM08X5001	45	20	17	50	M8	50	26
L75648.0028	L75648.TM10X2001	45	20	17	50	M10	20	26
L75648.0029	L75648.TM10X2501	45	20	17	50	M10	25	28,5
L75648.0030	L75648.TM10X3001	45	20	17	50	M10	30	30

Customised stud length available for a minimum of 150 pieces.
LM = Maximum mouldable length.

L803

+135° -30° | PA6 +G.F. | RoHS COMPLIANT | MODELLO DEPOSITATO

12

“EUROMODEL” WING NUT WITH THREADED THROUGH-HOLE INSERT

Galletti Euromodel

Il Galletto “Euromodel” con boccola filettata fa parte della famiglia dei galletti , ma presenta un design più ricercato ed un tappo colorato, caratteristiche comuni di tutti i prodotti facenti parte della linea Euromodel. Il design del galletto è molto sinuoso e rotondo, presenta inoltre due incavi disegnati per inserire le dita e facilitare la rotazione e l’applicazione della forza sul galletto. Tutta la serie di questi galletti ha il design depositato. L’articolo presenta una boccola in ottone o, in alternativa una boccola in acciaio inox, con foro filettato passante, che poi viene chiuso da un tappo colorato senza però agire come fermo. In questo modo è possibile dare un tocco di colore al prodotto e renderlo più accattivante o personalizzato. Il Galletto “Euromodel” con boccola filettata L803 è fatto con materiali a base di poliammide rinforzata. Colori disponibili per il tappo: Arancio, Blu, Giallo, Rosso, Verde, Grigio.

Materials:

Reinforced polyamide.

Resistant to oils and greases.

Surface finish:

Satin.

Colour:

Black (RAL 9011).

Central Cap:

Grey polyamide (RAL 7035 code 13).

Alternative Cap colours:

Orange	(RAL 2004 code 02).
Blue	(RAL 5015 code 07).
Yellow	(RAL 1021 code 10).
Red	(RAL 3000 code 16).
Green	(RAL 6024 code 17).
Black	(RAL 9011 code 01).

Inserts:

L803:

Brass insert with threaded through hole (thread tolerance 6H).

L803PIN:

Stainless steel insert with threaded through hole (Aisi 303) (thread tolerance 6H).

Special requests:

Upon request and for special quantities inserts can be supplied in different materials.

Upon request and for special quantities available in the colours indicated in the chart (attention: reduced range).

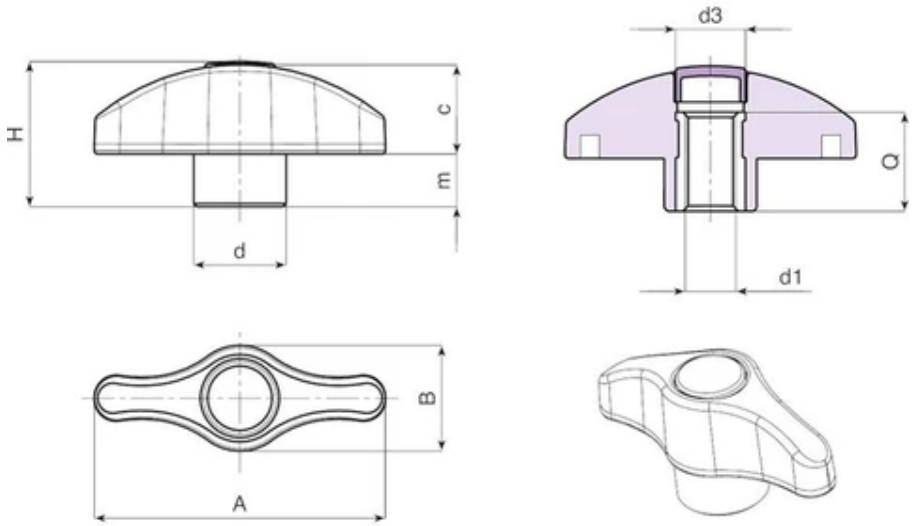

Version L803: standard brass insert.

Code	art.	A	B	H	m	c	d	d3	d1 6H	Q	Weight (g)
L80344.0004	L80344.TM050113	44	16	22	8	14	14	10	M5	15	10
L80344.0010	L80344.TM060113	44	16	22	8	14	14	10	M6	15	10
L80344.0017	L80344.TM080113	44	16	22	8	14	14	10	M8	15	11
L80352.0017	L80352.TM050113	52	19	26	9.5	16.5	17	13	M5	18	15
L80352.0005	L80352.TM060113	52	19	26	9.5	16.5	17	13	M6	18	15
L80352.0013	L80352.TM080113	52	19	26	9.5	16.5	17	13	M8	18	16
L80352.0016	L80352.TM100113	52	19	26	9.5	16.5	17	13	M10	18	16
L80367.0002	L80367.TM060113	67	24	32.5	11	21.5	21	16	M6	18	26
L80367.0004	L80367.TM080113	67	24	32.5	11	21.5	21	16	M8	18	26
L80367.0011	L80367.TM100113	67	24	32.5	11	21.5	21	16	M10	18	27
L80367.0015	L80367.TM120113	67	24	32.5	11	21.5	21	16	M12	18	27

Version L803 PIN - stainless steel insert (Aisi 303)

Code	art.	A	B	H	m	c	d	d3	d1 6H	Q	Weight (g)
L80344.0011	L80344.TM060113PIN	44	16	22	8	14	14	10	M6	15	10
L80352.0014	L80352.TM080113PIN	52	19	26	9.5	16.5	17	13	M8	18	16
L80367.0012	L80367.TM100113PIN	67	24	32.5	11	21.5	21	16	M10	18	27

L804

+135° -30° | PA6 +G.F. | RoHS COMPLIANT | MODELLO DEPOSITATO

12

“EUROMODEL” WING NUT WITH THREADED STUD

Galletti Euromodel

Materials:

Reinforced polyamide.

Resistant to oils and greases.

Surface finish:

Satin.

Colour:

Black (RAL 9011).

Central Cap:

Grey PA6 (RAL 7035 code 13).

Alternative Cap colours:

Orange	(RAL 2004 code 02).
Blue	(RAL 5015 code 07).
Yellow	(RAL 1021 code 10).
Red	(RAL 3000 code 16).
Green	(RAL 6024 code 17).
Black	(RAL 9011 code 01).

Inserts:

L804:

Galvanised steel threaded stud (thread tolerance 6g).

L804CIN:

Stainless steel threaded stud (Aisi 303) (thread tolerance 6g).

Special requests:

Upon request and for special quantities inserts can be supplied with customised lengths.

Upon request and for special quantities inserts can be supplied in different materials.

Upon request and for special quantities available in the colours indicated in the chart (attention: reduced range).

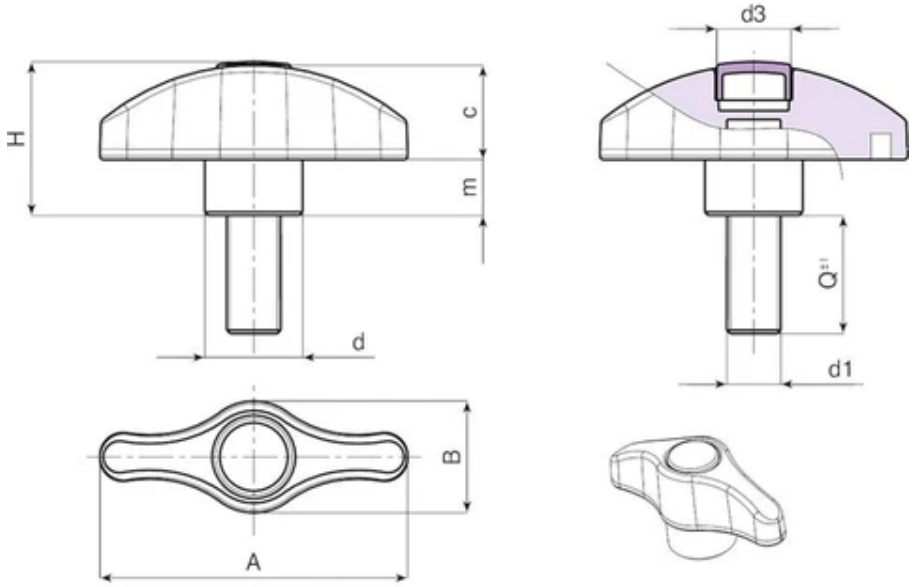

Version L804 - galvanised steel stud.

Code	art.	A	B	H	m	c	d	d3	LM	d1 6g	Q	Weight (g)
L80444.0004	L80444.TM05X160113	44	16	22	8	14	14	10	80	M5	16	11
L80444.0008	L80444.TM05X200113	44	16	22	8	14	14	10	80	M5	20	11,5
L80444.0012	L80444.TM05X250113	44	16	22	8	14	14	10	80	M5	25	12
L80444.0014	L80444.TM05X300113	44	16	22	8	14	14	10	80	M5	30	12,5
L80444.0016	L80444.TM05X400113	44	16	22	8	14	14	10	80	M5	40	13,5
L80444.0018	L80444.TM05X500113	44	16	22	8	14	14	10	80	M5	50	14,5
L80444.0023	L80444.TM06X160113	44	16	22	8	14	14	10	80	M6	16	12
L80444.0029	L80444.TM06X200113	44	16	22	8	14	14	10	80	M6	20	13
L80444.0035	L80444.TM06X250113	44	16	22	8	14	14	10	80	M6	25	14
L80444.0038	L80444.TM06X300113	44	16	22	8	14	14	10	80	M6	30	15
L80444.0042	L80444.TM06X400113	44	16	22	8	14	14	10	80	M6	40	16
L80444.0046	L80444.TM06X500113	44	16	22	8	14	14	10	80	M6	50	17
L80444.0050	L80444.TM08X160113	44	16	22	8	14	14	10	80	M8	16	19
L80444.0054	L80444.TM08X200113	44	16	22	8	14	14	10	80	M8	20	20,5
L80444.0058	L80444.TM08X250113	44	16	22	8	14	14	10	80	M8	25	22
L80444.0060	L80444.TM08X300113	44	16	22	8	14	14	10	80	M8	30	23,5
L80444.0063	L80444.TM08X400113	44	16	22	8	14	14	10	80	M8	40	26
L80444.0066	L80444.TM08X500113	44	16	22	8	14	14	10	80	M8	50	29
L80452.0002	L80452.TM06X160113	52	19	26	9.5	16.5	17	13	80	M6	16	17
L80452.0004	L80452.TM06X200113	52	19	26	9.5	16.5	17	13	80	M6	20	18
L80452.0006	L80452.TM06X250113	52	19	26	9.5	16.5	17	13	80	M6	25	19

Code	art.	A	B	H	m	c	d	d3	LM	d1 6g	Q	Weight (g)
L80452.0007	L80452.TM06X300113	52	19	26	9.5	16.5	17	13	80	M6	30	20
L80452.0012	L80452.TM06X400113	52	19	26	9.5	16.5	17	13	80	M6	40	21
L80452.0015	L80452.TM06X500113	52	19	26	9.5	16.5	17	13	80	M6	50	22
L80452.0017	L80452.TM08X160113	52	19	26	9.5	16.5	17	13	80	M8	16	24
L80452.0024	L80452.TM08X200113	52	19	26	9.5	16.5	17	13	80	M8	20	25,5
L80452.0031	L80452.TM08X250113	52	19	26	9.5	16.5	17	13	80	M8	25	27
L80452.0033	L80452.TM08X300113	52	19	26	9.5	16.5	17	13	80	M8	30	28,5
L80452.0038	L80452.TM08X400113	52	19	26	9.5	16.5	17	13	80	M8	40	31
L80452.0043	L80452.TM08X500113	52	19	26	9.5	16.5	17	13	80	M8	50	34
L80452.0049	L80452.TM10X200113	52	19	26	9.5	16.5	17	13	80	M10	20	32
L80452.0054	L80452.TM10X250113	52	19	26	9.5	16.5	17	13	80	M10	25	35
L80452.0058	L80452.TM10X300113	52	19	26	9.5	16.5	17	13	80	M10	30	38
L80452.0060	L80452.TM10X400113	52	19	26	9.5	16.5	17	13	80	M10	40	42
L80452.0063	L80452.TM10X500113	52	19	26	9.5	16.5	17	13	80	M10	50	47
L80467.0004	L80467.TM08X160113	67	24	32.5	11	21.5	21	16	100	M8	16	32
L80467.0008	L80467.TM08X200113	67	24	32.5	11	21.5	21	16	100	M8	20	33,5
L80467.0010	L80467.TM08X250113	67	24	32.5	11	21.5	21	16	100	M8	25	35
L80467.0013	L80467.TM08X300113	67	24	32.5	11	21.5	21	16	100	M8	30	36,5
L80467.0016	L80467.TM08X400113	67	24	32.5	11	21.5	21	16	100	M8	40	39,5
L80467.0019	L80467.TM08X500113	67	24	32.5	11	21.5	21	16	100	M8	50	42,5
L80467.0027	L80467.TM10X300113	67	24	32.5	11	21.5	21	16	100	M10	30	44,5
L80467.0033	L80467.TM10X500113	67	24	32.5	11	21.5	21	16	100	M10	50	54,5
L80467.0036	L80467.TM12X300113	67	24	32.5	11	21.5	21	16	100	M12	30	52
L80467.0037	L80467.TM12X400113	67	24	32.5	11	21.5	21	16	100	M12	40	59

Threaded stud length on request, with a minimum quantity of 250 pieces.
LM = Maximum mouldable length.

Version L804CIN: stainless steel stud (Aisi 303).

Code	art.	A	B	H	m	c	d	d3	LM	d1 6g	Q	Weight (g)

Threaded stud length on request, with a minimum quantity of 250 pieces.
LM = Maximum mouldable length.

L805

+135° -30° | PA6 +G.F. | RoHS COMPLIANT | MODELLO DEPOSITATO

12 “EUROMODEL” WING NUT WITH INSERT AND SMOOTH THROUGH BORE

Galletti Euromodel

Materials:

Reinforced polyamide.

Resistant to oils and greases.

Surface finish:

Satin.

Colour:

Black (RAL 9011).

Central Cap:

Grey polyamide (RAL 7035 code 13).

Alternative Cap colours:

Orange	(RAL 2004 code 02).
Blue	(RAL 5015 code 07).
Yellow	(RAL 1021 code 10).
Red	(RAL 3000 code 16).
Green	(RAL 6024 code 17).
Black	(RAL 9011 code 01).

Inserts:

L805:

Brass insert with smooth through bore (bore tolerance H9).

L805PIN:

Galvanised steel insert with smooth through bore (Aisi 303) (bore tolerance H9).

Special requests:

Upon request and for special quantities inserts can be supplied in different materials.

Upon request and for special quantities available in the colours indicated in the chart (attention: reduced range).

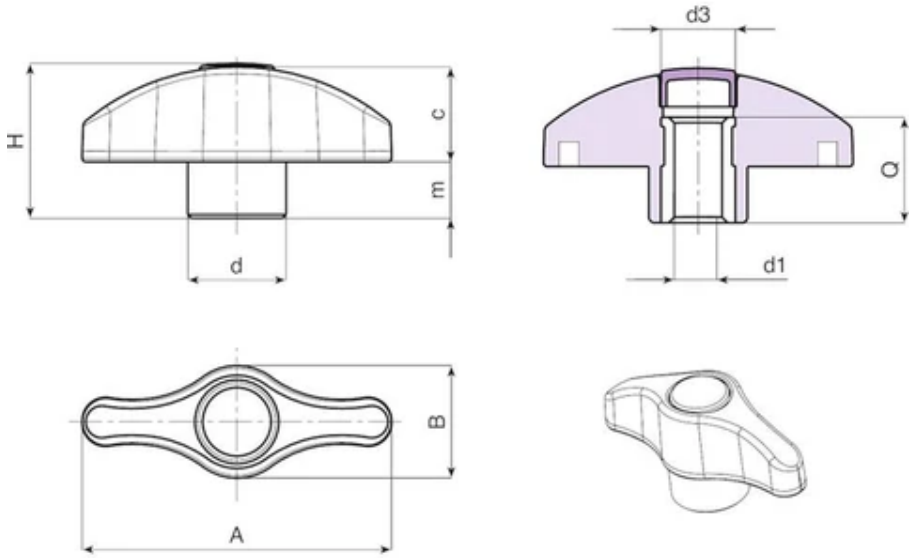

Version L805: standard brass insert.

Code	art.	A	B	H	m	c	d	d3	d1 H9	Q	Weight (g)
L80544.0007	L80544.TD050113	44	16	22	8	14	14	10	5	15	9
L80544.0002	L80544.TD060113	44	16	22	8	14	14	10	6	15	9
L80544.0006	L80544.TD080113	44	16	22	8	14	14	10	8	15	10
L80552.0001	L80552.TD050113	52	19	26	9.5	16.5	17	13	5	18	14
L80552.0003	L80552.TD060113	52	19	26	9.5	16.5	17	13	6	18	14
L80552.0004	L80552.TD080113	52	19	26	9.5	16.5	17	13	8	18	15
L80552.0007	L80552.TD100113	52	19	26	9.5	16.5	17	13	10	18	16
L80567.0001	L80567.TD060113	67	24	32.5	11	21.5	21	16	6	18	25
L80567.0002	L80567.TD080113	67	24	32.5	11	21.5	21	16	8	18	25
L80567.0003	L80567.TD100113	67	24	32.5	11	21.5	21	16	10	18	26
L80567.0005	L80567.TD120113	67	24	32.5	11	21.5	21	16	12	18	26

Version L805PIN: stainless steel insert (Aisi 303).

Code	art.	A	B	H	m	c	d	d3	d1 H9	Q	Weight (g)
L80544.0003	L80544.TD060113PIN	44	16	22	8	14	14	10	6	15	9
L80552.0005	L80552.TD080113PIN	52	19	26	9.5	16.5	17	13	8	18	15
L80567.0004	L80567.TD100113PIN	67	24	32.5	11	21.5	21	16	10	18	26

L806

+135° -30° | PA6 +G.F. | RoHS COMPLIANT | MODELLO DEPOSITATO

12 “EUROMODEL” WING NUT WITH THREADED THROUGH-HOLE INSERT WITHOUT CAP

Galletti Euromodel

Materials:

Reinforced polyamide.

Resistant to oils and greases.

Surface finish:

Satin.

Colour:

Black (RAL 9011).

Inserts:

L806: Brass insert with threaded through hole (thread tolerance 6H).

L806PIN: Stainless steel insert with threaded through hole (Aisi 303) (thread tolerance 6H).

Special requests:

Upon request and for special quantities inserts can be supplied in different materials.

Upon request and for special quantities available in the colours indicated in the chart (attention: reduced range).

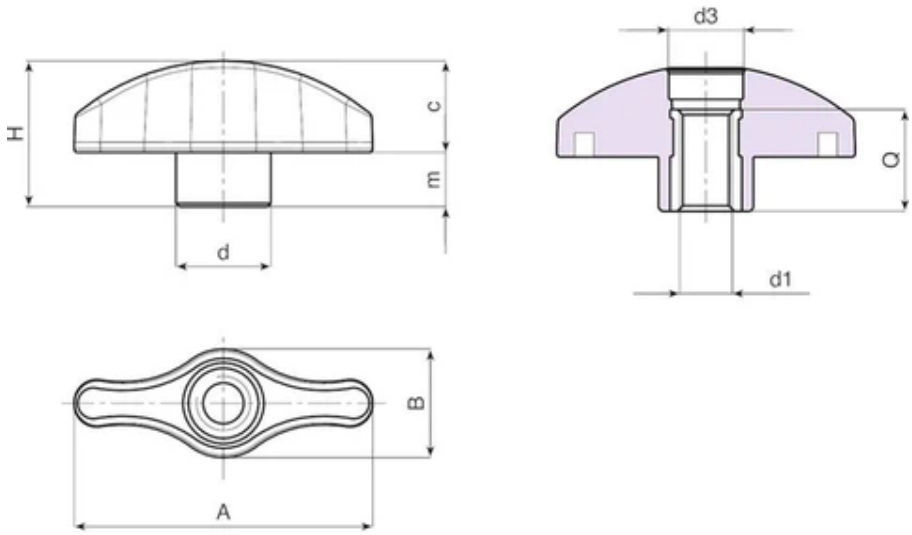

Version L806: standard brass insert.

Code	art.	A	B	H	m	c	d	d3	d1 6H	Q	Weight (g)
L80644.0001	L80644.TM0501	44	16	21.5	8	14	14	10	M5	15	9
L80644.0002	L80644.TM0601	44	16	21.5	8	14	14	10	M6	15	9
L80644.0004	L80644.TM0801	44	16	21.5	8	14	14	10	M8	15	10
L80652.0001	L80652.TM0501	52	19	25.5	9.5	16.5	17	13	M5	18	14
L80652.0002	L80652.TM0601	52	19	25.5	9.5	16.5	17	13	M6	18	15
L80652.0003	L80652.TM0801	52	19	25.5	9.5	16.5	17	13	M8	18	16
L80652.0005	L80652.TM1001	52	19	25.5	9.5	16.5	17	13	M10	18	16
L80667.0001	L80667.TM0601	67	24	32	11	21.5	21	16	M6	18	25
L80667.0002	L80667.TM0801	67	24	32	11	21.5	21	16	M8	18	25
L80667.0004	L80667.TM1001	67	24	32	11	21.5	21	16	M10	18	26
L80667.0006	L80667.TM1201	67	24	32	11	21.5	21	16	M12	18	26

Version L806PIN: stainless steel insert (Aisi 303).

Code	art.	A	B	H	m	c	d	d3	d1 6H	Q	Weight (g)
L80644.0003	L80644.TM0601PIN	44	16	21.5	8	14	14	10	M6	15	9
L80652.0004	L80652.TM0801PIN	52	19	25.5	9.5	16.5	17	13	M8	18	16
L80667.0005	L80667.TM1001PIN	67	24	32	11	21.5	21	16	M10	18	26

L807

+135° -30° | PA6 +G.F. | RoHS COMPLIANT | MODELLO DEPOSITATO

12

“EUROMODEL” WING NUT WITH THREADED STUD WITHOUT CAP

Galletti Euromodel

Materials:

Reinforced polyamide.

Resistant to oils and greases.

Surface finish:

Satin.

Colour:

Black (RAL 9011).

Inserts:

L807:

Galvanised steel threaded stud (thread tolerance 6g).

L807CIN:

Stainless steel threaded stud (Aisi 303) (thread tolerance 6g).

Special requests:

Upon request and for special quantities inserts can be supplied with customised lengths.

Upon request and for special quantities inserts can be supplied in different materials.

Upon request and for special quantities available in the colours indicated in the chart (attention: reduced range).

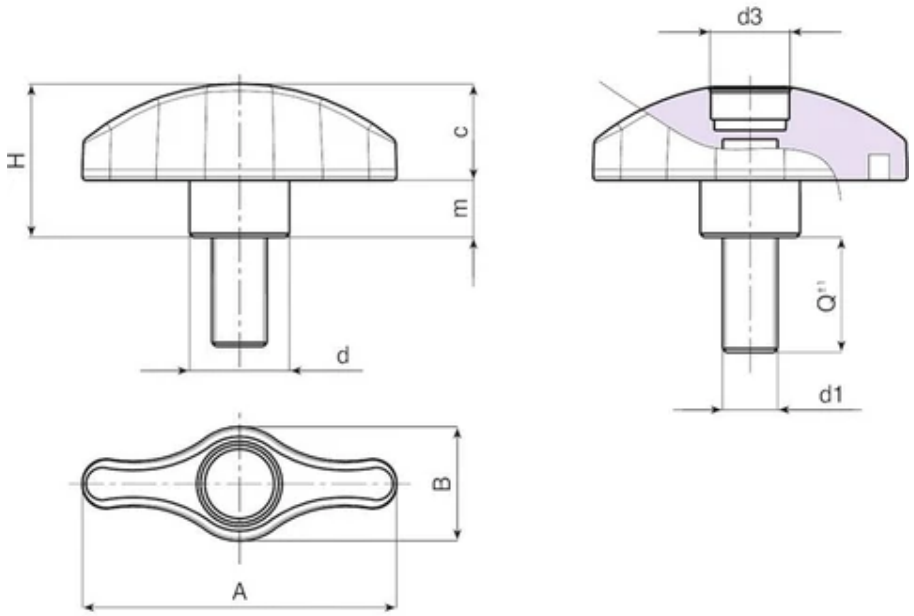

Version L807: galvanised steel stud.

Code	art.	A	B	H	m	c	d	d3	LM	d1 6g	Q	Weight (g)
L80744.0001	L80744.TM05X1601	44	16	21.5	8	14	14	10	80	M5	16	10
L80744.0002	L80744.TM05X2001	44	16	21.5	8	14	14	10	80	M5	20	10,5
L80744.0003	L80744.TM05X2501	44	16	21.5	8	14	14	10	80	M5	25	11
L80744.0004	L80744.TM05X3001	44	16	21.5	8	14	14	10	80	M5	30	11,5
L80744.0005	L80744.TM05X4001	44	16	21.5	8	14	14	10	80	M5	40	12,5
L80744.0006	L80744.TM05X5001	44	16	21.5	8	14	14	10	80	M5	50	13,5
L80744.0008	L80744.TM06X1601	44	16	21.5	8	14	14	10	80	M6	16	11
L80744.0010	L80744.TM06X2001	44	16	21.5	8	14	14	10	80	M6	20	12
L80744.0012	L80744.TM06X2501	44	16	21.5	8	14	14	10	80	M6	25	13
L80744.0013	L80744.TM06X3001	44	16	21.5	8	14	14	10	80	M6	30	14
L80744.0015	L80744.TM06X4001	44	16	21.5	8	14	14	10	80	M6	40	15
L80744.0017	L80744.TM06X5001	44	16	21.5	8	14	14	10	80	M6	50	16
L80744.0018	L80744.TM08X1601	44	16	21.5	8	14	14	10	80	M8	16	18
L80744.0019	L80744.TM08X2001	44	16	21.5	8	14	14	10	80	M8	20	19,5
L80744.0021	L80744.TM08X2501	44	16	21.5	8	14	14	10	80	M8	25	21
L80744.0022	L80744.TM08X3001	44	16	21.5	8	14	14	10	80	M8	30	22,5
L80744.0023	L80744.TM08X4001	44	16	21.5	8	14	14	10	80	M8	40	25
L80744.0024	L80744.TM08X5001	44	16	21.5	8	14	14	10	80	M8	50	28
L80752.0001	L80752.TM06X1601	52	19	25.5	9.5	16.5	17	13	80	M6	16	16
L80752.0002	L80752.TM06X2001	52	19	25.5	9.5	16.5	17	13	80	M6	20	17
L80752.0003	L80752.TM06X2501	52	19	25.5	9.5	16.5	17	13	80	M6	25	18

Code	art.	A	B	H	m	c	d	d3	LM	d1 6g	Q	Weight (g)
L80752.0004	L80752.TM06X3001	52	19	25.5	9.5	16.5	17	13	80	M6	30	19
L80752.0005	L80752.TM06X4001	52	19	25.5	9.5	16.5	17	13	80	M6	40	20
L80752.0006	L80752.TM06X5001	52	19	25.5	9.5	16.5	17	13	80	M6	50	21
L80752.0007	L80752.TM08X1601	52	19	25.5	9.5	16.5	17	13	80	M8	16	23
L80752.0009	L80752.TM08X2001	52	19	25.5	9.5	16.5	17	13	80	M8	20	24,5
L80752.0011	L80752.TM08X2501	52	19	25.5	9.5	16.5	17	13	80	M8	25	26
L80752.0013	L80752.TM08X3001	52	19	25.5	9.5	16.5	17	13	80	M8	30	27,5
L80752.0016	L80752.TM08X4001	52	19	25.5	9.5	16.5	17	13	80	M8	40	30
L80752.0018	L80752.TM08X5001	52	19	25.5	9.5	16.5	17	13	80	M8	50	33
L80752.0020	L80752.TM10X2001	52	19	25.5	9.5	16.5	17	13	80	M10	20	31
L80752.0022	L80752.TM10X2501	52	19	25.5	9.5	16.5	17	13	80	M10	25	34
L80752.0023	L80752.TM10X3001	52	19	25.5	9.5	16.5	17	13	80	M10	30	37
L80752.0024	L80752.TM10X4001	52	19	25.5	9.5	16.5	17	13	80	M10	40	41
L80752.0025	L80752.TM10X5001	52	19	25.5	9.5	16.5	17	13	80	M10	50	46
L80767.0007	L80767.TM08X1601	67	24	32	11	21.5	21	16	100	M8	16	31
L80767.0008	L80767.TM08X2001	67	24	32	11	21.5	21	16	100	M8	20	32,5
L80767.0009	L80767.TM08X2501	67	24	32	11	21.5	21	16	100	M8	25	34
L80767.0010	L80767.TM08X3001	67	24	32	11	21.5	21	16	100	M8	30	35,5
L80767.0011	L80767.TM08X4001	67	24	32	11	21.5	21	16	100	M8	40	38,5
L80767.0012	L80767.TM08X5001	67	24	32	11	21.5	21	16	100	M8	50	41,5
L80767.0018	L80767.TM10X3001	67	24	32	11	21.5	21	16	100	M10	30	43,5
L80767.0022	L80767.TM10X5001	67	24	32	11	21.5	21	16	100	M10	50	53,5
L80767.0026	L80767.TM12X3001	67	24	32	11	21.5	21	16	100	M12	30	51
L80767.0027	L80767.TM12X4001	67	24	32	11	21.5	21	16	100	M12	40	58

Threaded stud length on request, with a minimum quantity of 250 pieces.
LM = Maximum mouldable length.

Version L807CIN: stainless steel stud (Aisi 303).

Code	art.	A	B	H	m	c	d	d3	LM	d1 6g	Q	Weight (g)

Threaded stud length on request, with a minimum quantity of 250 pieces.
LM = Maximum mouldable length.

L808

+135° -30° | PA6 +G.F. | RoHS COMPLIANT | MODELLO DEPOSITATO

12 “EUROMODEL” WING NUT WITH SMOOTH THROUGH BORE WITHOUT CAP

Galletti Euromodel

Materials:

Reinforced polyamide.

Resistant to oils and greases.

Surface finish:

Satin.

Colour:

Black (RAL 9011).

Inserts:

L808:

Brass insert with smooth through bore (bore tolerance H9).

L808PIN:

Galvanised steel insert with smooth through bore (Aisi 303) (bore tolerance H9).

Special requests:

Upon request and for special quantities inserts can be supplied in different materials.

Upon request and for special quantities available in the colours indicated in the chart (attention: reduced range).

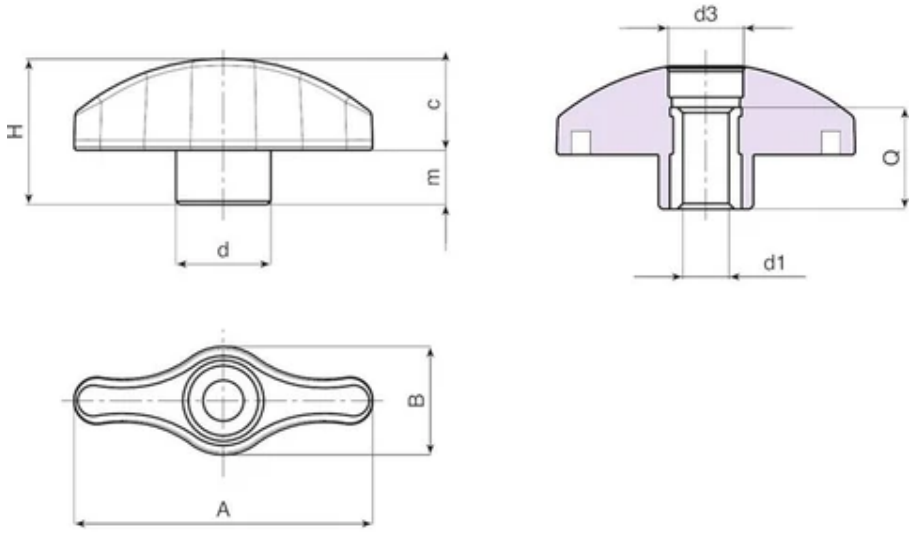

Version L808: standard brass insert.

Code	art.	A	B	H	m	c	d	d3	d1 H9	Q	Weight (g)
L80844.0001	L80844.TD0501	44	16	21.5	8	14	14	10	5	15	8
L80844.0002	L80844.TD0601	44	16	21.5	8	14	14	10	6	15	8
L80844.0004	L80844.TD0801	44	16	21.5	8	14	14	10	8	15	9
L80852.0005	L80852.TD0501	52	19	25.5	9.5	16.5	17	13	5	18	13
L80852.0001	L80852.TD0601	52	19	25.5	9.5	16.5	17	13	6	18	13
L80852.0002	L80852.TD0801	52	19	25.5	9.5	16.5	17	13	8	18	14
L80852.0004	L80852.TD1001	52	19	25.5	9.5	16.5	17	13	10	18	15
L80867.0001	L80867.TD0601	67	24	32	11	21.5	21	16	6	18	24
L80867.0002	L80867.TD0801	67	24	32	11	21.5	21	16	8	18	24
L80867.0003	L80867.TD1001	67	24	32	11	21.5	21	16	10	18	25
L80867.0005	L80867.TD1201	67	24	32	11	21.5	21	16	12	18	25

Version L808PIN: stainless steel insert (Aisi 303).

Code	art.	A	B	H	m	c	d	d3	d1 H9	Q	Weight (g)
L80844.0003	L80844.TD0601PIN	44	16	21.5	8	14	14	10	6	15	8
L80852.0003	L80852.TD0801PIN	52	19	25.5	9.5	16.5	17	13	8	18	14
L80867.0004	L80867.TD1001PIN	67	24	32	11	21.5	21	16	10	18	25