# E215

+135° -30° | PA6 +G.F. | RoHS COMPLIANT

## 05 ???? ???? ?? ??? ?? ? ??? ??

Crank handles with threaded hole

Normalmente è abbinata ad un asse di un macchinario, ed è il modello più economico che può espletare tale servizio. La sua forma a mono-braccio ne facilità la produzione e ne riduce il peso, consentendo di essere prodotta anche in grandi dimensioni (raggio 185mm.). Questo porta ad ingrandire il raggio con cui viene applicata la forza consentendo di moltiplicare la forza di rotazione, di fissaggio oppure di avere grande velocità di rotazione consentendo grandi spostamenti. In fatti alla fine c'è sempre un manico girevole che facilità l'impugnabilità e che si adatta alla rotazione della mano per evitare sforzi. In questo modello E215, Il foro dell'inserto è filettato e per fissarlo all'albero è sufficiente un controdado; mentre il manico abbianto è il modello Manico girevole M144 , cheè il modello base più economico. Sono disponibili varianti con manici girevoli e pieghevoli di vario tipo. Spesso, in abbinamento a tale prodotto, si monta un numeratore K600, con la funzione di indicare lo spostamento fatto tramite un sistema di ingranaggi e display numerico. Anche per questo modello troviamo un comodo tappo asportabile, disponibile in diversi colori e facile da personalizzare mediante tampografia. Prodotto adatto per macchine utensili manuali, trapani, foratrici, macchine per imballaggio, seghe e seghetti, macchine per confezionamento, attrezzature alimentari. La manovella con manico E215 è fatta con materiali a base di poliammide rinforzata. Questo modello è una versione base, ma può essere richiesto con diversi modelli di manici girevoli, pieghevoli, (manovella con manico, manovella a scatto, manovella con manico pieghevole, manovella in metallo, manovella di manovra, ecc.)

**??:**

?? ?????.

??? ???? ??.

**?? ??:**

???? (??? ?? ????).

**??:**

?? (RAL 9011).

**?? ?:**

?? ????? (polyamide) (RAL 7035 cod. 13).

**? ??:**

????: (RAL 2004 cod. 02).

?? (RAL 3000 cod. 16).

?? (RAL 5015 cod. 07).

?? (RAL 6024 cod. 17).

?? (RAL 1021 cod. 10).

?? (RAL 9011 cod. 01).

**???:**

??? ??? ?? ?? ???(??? ?? 6H).

(*) ??? ??? ?? ?? ?? ?? ???(??? ?? 6H).

**??? ???:**

?? ?? ?? ??.

**??? ??:**

?? ?? M144.

**?? ?? ??:**

?? ? ?? ?? ??? ??, ????? ??? ??? ??? ?? ? ????.

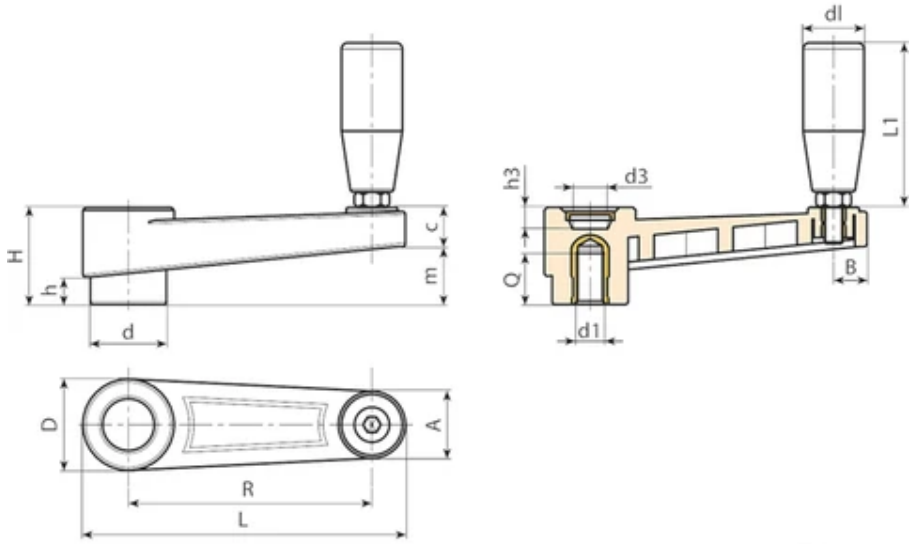


© Copyright
Boteco srl Unipersonale

| □□ | Art. | L | R | H | D | d | m | c | A | B | h | d3 | h3 | d1 6H | Q | dl | L1 |
|---|---|---|---|---|---|---|---|---|---|---|---|---|---|---|---|---|---|
| E215065.0002 | E215065.TM0801 | 88,5 | 65 | 30 | 27,5 | 22 | 17 | 13 | 20 | 9,5 | 8 | 14,5 | 10 | M8 | 13 | 19 | 54 |
| E215065.0005 | E215065.TM1001 | 88,5 | 65 | 30 | 27,5 | 22 | 17 | 13 | 20 | 9,5 | 8 | 14,5 | 10 | M10 | 13 | 19 | 54 |
| E215065.0007 | E215065.TM1201 | 88,5 | 65 | 30 | 27,5 | 22 | 17 | 13 | 20 | 9,5 | 8 | 14,5 | 10 | M12 | 13 | 19 | 54 |
| E215080.0003 | E215080.TM0801 | 107 | 80 | 33,5 | 32 | 26 | 20,5 | 13 | 23 | 11 | 9 | 19,5 | 9,5 | M8 | 13 | 19 | 54 |
| E215080.0004 | E215080.TM1001 | 107 | 80 | 33,5 | 32 | 26 | 20,5 | 13 | 23 | 11 | 9 | 19,5 | 9,5 | M10 | 13 | 19 | 54 |
| E215080.0008 | E215080.TM1201 | 107 | 80 | 33,5 | 32 | 26 | 20,5 | 13 | 23 | 11 | 9 | 19,5 | 9,5 | M12 | 13 | 19 | 54 |
| E215110.0003 | E215110.TM1001 | 140 | 110 | 39 | 35 | 29 | 25 | 14 | 24 | 12 | 11 | 19,5 | 11 | M10 | 13 | 21 | 66 |
| E215110.0005 | E215110.TM1201 | 140 | 110 | 39 | 35 | 29 | 25 | 14 | 24 | 12 | 11 | 19,5 | 11 | M12 | 17 | 21 | 66 |
| E215110.0007 | E215110.TM1401 | 140 | 110 | 39 | 35 | 29 | 25 | 14 | 24 | 12 | 11 | 19,5 | 11 | M14 | 17 | 21 | 66 |
| E215140.0002 | E215140.TM1201 | 175 | 140 | 49 | 44 | 35,5 | 32 | 17 | 27 | 13 | 15,5 | 24 | 19 | M12 | 17 | 23,5 | 76,5 |
| E215140.0005 | E215140.TM1401 | 175 | 140 | 49 | 44 | 35,5 | 32 | 17 | 27 | 13 | 15,5 | 24 | 19 | M14 | 17 | 23,5 | 76,5 |
| E215140.0006 | E215140.TM1601 | 175 | 140 | 49 | 44 | 35,5 | 32 | 17 | 27 | 13 | 15,5 | 24 | 19 | (*) M16 | 17 | 23,5 | 76,5 |
| E215185.0001 | E215185.TM1201 | 223 | 185 | 55 | 47,5 | 40 | 38,5 | 16,5 | 27 | 14 | 17 | 29,5 | 21 | M12 | 17 | 25,5 | 87 |
| E215185.0003 | E215185.TM1401 | 223 | 185 | 55 | 47,5 | 40 | 38,5 | 16,5 | 27 | 14 | 17 | 29,5 | 21 | M14 | 17 | 25,5 | 87 |
| E215185.0004 | E215185.TM1601 | 223 | 185 | 55 | 47,5 | 40 | 38,5 | 16,5 | 27 | 14 | 17 | 29,5 | 21 | (*) M16 | 17 | 25,5 | 87 |

| □□ | Art. | □□(g) |
|---|---|---|
| E215065.0002 | E215065.TM0801 | 67 |
| E215065.0005 | E215065.TM1001 | 70 |
| E215065.0007 | E215065.TM1201 | 73 |

| ?? | Art. | ??(g) |
|---|---|---|
| E215080.0003 | E215080.TM0801 | 83 |
| E215080.0004 | E215080.TM1001 | 87 |
| E215080.0008 | E215080.TM1201 | 90 |
| E215110.0003 | E215110.TM1001 | 135 |
| E215110.0005 | E215110.TM1201 | 137 |
| E215110.0007 | E215110.TM1401 | 140 |
| E215140.0002 | E215140.TM1201 | 238 |
| E215140.0005 | E215140.TM1401 | 223 |
| E215140.0006 | E215140.TM1601 | 251 |
| E215185.0001 | E215185.TM1201 | 312 |
| E215185.0003 | E215185.TM1401 | 320 |
| E215185.0004 | E215185.TM1601 | 331 |

# E216

+135°
-30°

PA6
+G.F.

RoHS✓
COMPLIANT

## 05 ??? ?? / ? ???, ?? ??

Crank handles with smooth bore

**??:**

?? ?????.

??? ???? ??.

**?? ??:**

???? (??? ?? ????).

**??:**

?? (RAL 9011).

**?? ?:**

?? ????? (polyamide) (RAL 7035 cod. 13).

**? ??:**

????: (RAL 2004 cod. 02).

?? (RAL 3000 cod. 16).

?? (RAL 5015 cod. 07).

?? (RAL 6024 cod. 17).

?? (RAL 1021 cod. 10).

?? (RAL 9011 cod. 01).

**???:**

???? ?? ??? ?? ?? ?? ?? ???(?? H10).

**??? ???:**

?? ?? ?? ??.

**??? ??:**

??? ??? ?? M144.

**?? ?? ??:**

?? ?? ?? ???, ?? d1 ? ??? ?? ??.

?? ?? ?? ???, ?? ??? ?? ?? ?? ??? ?? ??.

?? ? ? ?? ?? ?? ? ??? ??? ???? ?? ?????.

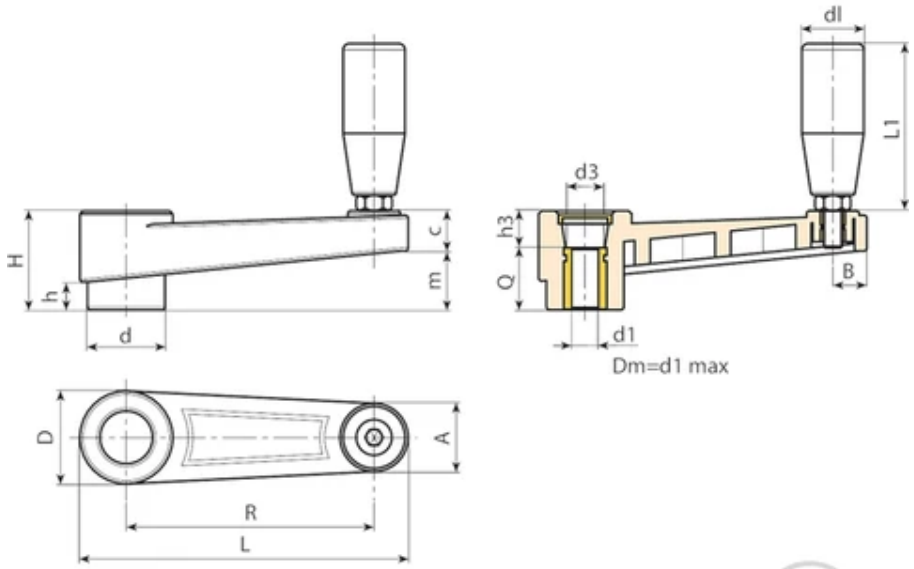


© Copyright
Boteco srl Unipersonale

| ⍰⍰ | Art. | L | R | H | D | d | m | c | A | B | h | d3 | h3 | dm | d1 H10 | Q | dl |
|---|---|---|---|---|---|---|---|---|---|---|---|---|---|---|---|---|---|
| E216065.0015 | E216065.TP0501 | 88,5 | 65 | 30 | 27,5 | 22 | 17 | 13 | 20 | 9,5 | 8 | 14,5 | 10 | 12 | 5 | 20 | 19 |
| E216065.0004 | E216065.TD1001 | 88,5 | 65 | 30 | 27,5 | 22 | 17 | 13 | 20 | 9,5 | 8 | 14,5 | 10 | 12 | 10 | 20 | 19 |
| E216065.0009 | E216065.TD1201 | 88,5 | 65 | 30 | 27,5 | 22 | 17 | 13 | 20 | 9,5 | 8 | 14,5 | 10 | 12 | 12 | 20 | 19 |
| E216080.0020 | E216080.TP0501 | 107 | 80 | 33,5 | 32 | 26 | 20,5 | 13 | 23 | 11 | 9 | 19,5 | 9,5 | 14 | 5 | 24 | 19 |
| E216080.0007 | E216080.TD1001 | 107 | 80 | 33,5 | 32 | 26 | 20,5 | 13 | 23 | 11 | 9 | 19,5 | 9,5 | 14 | 10 | 24 | 19 |
| E216080.0009 | E216080.TD1201 | 107 | 80 | 33,5 | 32 | 26 | 20,5 | 13 | 23 | 11 | 9 | 19,5 | 9,5 | 14 | 12 | 24 | 19 |
| E216110.0003 | E216110.TD0801 | 140 | 110 | 39 | 35 | 29 | 25 | 14 | 24 | 12 | 11 | 19,5 | 11 | 14 | 8 | 28 | 21 |
| E216110.0005 | E216110.TD1001 | 140 | 110 | 39 | 35 | 29 | 25 | 14 | 24 | 12 | 11 | 19,5 | 11 | 14 | 10 | 28 | 21 |
| E216110.0006 | E216110.TD1201 | 140 | 110 | 39 | 35 | 29 | 25 | 14 | 24 | 12 | 11 | 19,5 | 11 | 14 | 12 | 28 | 21 |
| E216140.0002 | E216140.TD0801 | 175 | 140 | 49 | 44 | 35,5 | 32 | 17 | 27 | 13 | 15,5 | 24 | 19 | 20 | 8 | 30 | 23,5 |
| E216140.0007 | E216140.TD1201 | 175 | 140 | 49 | 44 | 35,5 | 32 | 17 | 27 | 13 | 15,5 | 24 | 19 | 20 | 12 | 30 | 23,5 |
| E216140.0011 | E216140.TD1401 | 175 | 140 | 49 | 44 | 35,5 | 32 | 17 | 27 | 13 | 15,5 | 24 | 19 | 20 | 14 | 30 | 23,5 |
| E216140.0017 | E216140.TD1601 | 175 | 140 | 49 | 44 | 35,5 | 32 | 17 | 27 | 13 | 15,5 | 24 | 19 | 20 | 16 | 30 | 23,5 |
| E216185.0001 | E216185.TD0801 | 223 | 185 | 55 | 47,5 | 40 | 38,5 | 16,5 | 27 | 14 | 17 | 29,5 | 21 | 22 | 8 | 34 | 25,5 |
| E216185.0004 | E216185.TD1201 | 223 | 185 | 55 | 47,5 | 40 | 38,5 | 16,5 | 27 | 14 | 17 | 29,5 | 21 | 22 | 12 | 34 | 25,5 |

⍰⍰: ⍰⍰50⍰ ⍰⍰ ⍰⍰ ⍰ ⍰⍰ d1⍰ ⍰⍰ ⍰⍰⍰ ⍰ ⍰⍰⍰⍰ (⍰⍰ ⍰⍰H10 ⍰⍰ ⍰⍰ ⍰H7 ⍰⍰ ⍰⍰ ⍰⍰).
Dm = ⍰⍰Dm⍰⍰ ⍰⍰⍰⍰ ⍰⍰⍰ ⍰⍰⍰⍰ ⍰ ⍰⍰ ⍰⍰ ⍰⍰.

| ⍰⍰ | Art. | L1 | ⍰⍰(g) |
|---|---|---|---|
| E216065.0015 | E216065.TP0501 | 54 | 96 |
| E216065.0004 | E216065.TD1001 | 54 | 92 |

| □□ | Art. | L1 | □□(g) |
|---|---|---|---|
| E216065.0009 | E216065.TD1201 | 54 | 89 |
| E216080.0020 | E216080.TP0501 | 54 | 110 |
| E216080.0007 | E216080.TD1001 | 54 | 105 |
| E216080.0009 | E216080.TD1201 | 54 | 102 |
| E216110.0003 | E216110.TD0801 | 66 | 160 |
| E216110.0005 | E216110.TD1001 | 66 | 152 |
| E216110.0006 | E216110.TD1201 | 66 | 148 |
| E216140.0002 | E216140.TD0801 | 76,5 | 250 |
| E216140.0007 | E216140.TD1201 | 76,5 | 242 |
| E216140.0011 | E216140.TD1401 | 76,5 | 238 |
| E216140.0017 | E216140.TD1601 | 76,5 | 232 |
| E216185.0001 | E216185.TD0801 | 87 | 430 |
| E216185.0004 | E216185.TD1201 | 87 | 400 |

□□: □□50□ □□ □□ □ □□ d1□ □□ □□□ □ □□□□ (□□ □□ H10 □□ □□ □ H7 □□ □□ □□).
Dm = □□ Dm□□ □□□□ □□□ □□□□ □ □□ □□ □□.

# E217

+135°
-30°

PA6
+G.F.

RoHS✓
COMPLIANT

## 05 □□□ □□ / □ □□□, □□ & □□ □□

Crank handles with smooth bore

© Copyright
Boteco

**□□:**

□□ □□□□□.

□□□ □□□□ □□.

**□□ □□:**

□□□□ (□□□ □□ □□□□).

**□□:**

□□ (RAL 9011).

**□□ □:**

□□ □□□□□ (polyamide) (RAL 7035 cod. 13).

**□ □□:**

□□□□: (RAL 2004 cod. 02).

□□ (RAL 3000 cod. 16).

□□ (RAL 5015 cod. 07).

□□ (RAL 6024 cod. 17).

□□ (RAL 1021 cod. 10).

□□ (RAL 9011 cod. 01).

**□□□:**

□□□□ □□ □□□ □□ □□ □□ □□ □□□(□□ H10).

**□□□ □□□:**

□□ □□ □□ □□.

**□□□ □□:**

□□ & □□ □□ M136.

**□□ □□ □□:**

□□ □□ □□ □□□, □□ d1 □ □□□ □□ □□.

□□ □□ □□ □□□, □□ □□□ □□ □□ □□ □□□ □□ □□.

□□ □ □ □□ □□ □□ □ □□□ □□□ □□□□ □□ □□□□□.

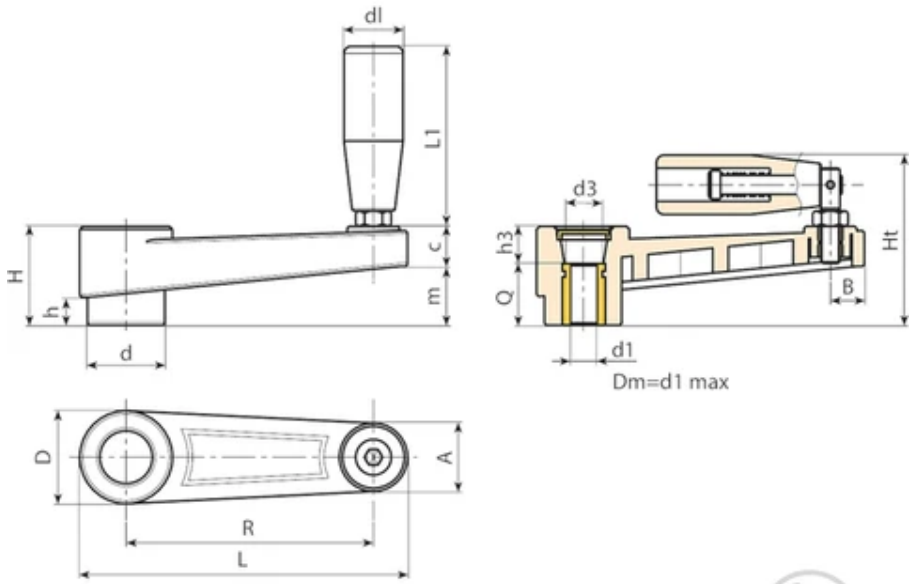


© Copyright
Boteco srl Unipersonale

| ⍰⍰ | Art. | L | R | H | Ht | D | d | m | c | A | B | h | d3 | h3 | dm | d1 H10 | Q |
|---|---|---|---|---|---|---|---|---|---|---|---|---|---|---|---|---|---|
| E217065.0018 | E217065.TP0501 | 88,5 | 65 | 30 | 55 | 27,5 | 22 | 17 | 13 | 20 | 9,5 | 8 | 14,5 | 10 | 12 | 5 | 20 |
| E217065.0006 | E217065.TD1001 | 88,5 | 65 | 30 | 55 | 27,5 | 22 | 17 | 13 | 20 | 9,5 | 8 | 14,5 | 10 | 12 | 10 | 20 |
| E217065.0011 | E217065.TD1201 | 88,5 | 65 | 30 | 55 | 27,5 | 22 | 17 | 13 | 20 | 9,5 | 8 | 14,5 | 10 | 12 | 12 | 20 |
| E217080.0015 | E217080.TP0501 | 107 | 80 | 33,5 | 58 | 32 | 26 | 20,5 | 13 | 23 | 11 | 9 | 19,5 | 9,5 | 14 | 5 | 24 |
| E217080.0003 | E217080.TD1001 | 107 | 80 | 33,5 | 58 | 32 | 26 | 20,5 | 13 | 23 | 11 | 9 | 19,5 | 9,5 | 14 | 10 | 24 |
| E217080.0007 | E217080.TD1201 | 107 | 80 | 33,5 | 58 | 32 | 26 | 20,5 | 13 | 23 | 11 | 9 | 19,5 | 9,5 | 14 | 12 | 24 |
| E217110.0001 | E217110.TD0801 | 140 | 110 | 39 | 68 | 35 | 29 | 25 | 14 | 24 | 12 | 11 | 19,5 | 11 | 14 | 8 | 28 |
| E217110.0008 | E217110.TD1001 | 140 | 110 | 39 | 68 | 35 | 29 | 25 | 14 | 24 | 12 | 11 | 19,5 | 11 | 14 | 10 | 28 |
| E217110.0010 | E217110.TD1201 | 140 | 110 | 39 | 68 | 35 | 29 | 25 | 14 | 24 | 12 | 11 | 19,5 | 11 | 14 | 12 | 28 |
| E217140.0004 | E217140.TD0801 | 175 | 140 | 49 | 84 | 44 | 35,5 | 32 | 17 | 27 | 13 | 15,5 | 24 | 19 | 20 | 8 | 30 |
| E217140.0007 | E217140.TD1201 | 175 | 140 | 49 | 84 | 44 | 35,5 | 32 | 17 | 27 | 13 | 15,5 | 24 | 19 | 20 | 12 | 30 |
| E217140.0009 | E217140.TD1401 | 175 | 140 | 49 | 84 | 44 | 35,5 | 32 | 17 | 27 | 13 | 15,5 | 24 | 19 | 20 | 14 | 30 |
| E217140.0013 | E217140.TD1601 | 175 | 140 | 49 | 84 | 44 | 35,5 | 32 | 17 | 27 | 13 | 15,5 | 24 | 19 | 20 | 16 | 30 |
| E217185.0001 | E217185.TD0801 | 223 | 185 | 55 | 90 | 47,5 | 40 | 38,5 | 16,5 | 27 | 14 | 17 | 29,5 | 21 | 22 | 8 | 34 |
| E217185.0004 | E217185.TD1201 | 223 | 185 | 55 | 90 | 47,5 | 40 | 38,5 | 16,5 | 27 | 14 | 17 | 29,5 | 21 | 22 | 12 | 34 |

⍰⍰: ⍰⍰50⍰ ⍰⍰ ⍰⍰ ⍰ ⍰⍰ d1⍰ ⍰⍰ ⍰⍰⍰ ⍰ ⍰⍰⍰⍰ (⍰⍰ ⍰⍰H10 ⍰⍰ ⍰⍰ ⍰H7 ⍰⍰ ⍰⍰ ⍰⍰).
Dm = ⍰⍰Dm⍰⍰ ⍰⍰⍰⍰ ⍰⍰⍰ ⍰⍰⍰⍰ ⍰ ⍰⍰ ⍰⍰ ⍰⍰.

| ⍰⍰ | Art. | dl | L1 | ⍰⍰(g) |
|---|---|---|---|---|
| E217065.0018 | E217065.TP0501 | 20 | 54 | 105 |
| E217065.0006 | E217065.TD1001 | 20 | 54 | 100 |

| □□ | Art. | dl | L1 | □□(g) |
|---|---|---|---|---|
| E217065.0011 | E217065.TD1201 | 20 | 54 | 97 |
| E217080.0015 | E217080.TP0501 | 20 | 54 | 115 |
| E217080.0003 | E217080.TD1001 | 20 | 54 | 110 |
| E217080.0007 | E217080.TD1201 | 20 | 54 | 107 |
| E217110.0001 | E217110.TD0801 | 23,5 | 76 | 156 |
| E217110.0008 | E217110.TD1001 | 23,5 | 76 | 153 |
| E217110.0010 | E217110.TD1201 | 23,5 | 76 | 150 |
| E217140.0004 | E217140.TD0801 | 26 | 89 | 300 |
| E217140.0007 | E217140.TD1201 | 26 | 89 | 245 |
| E217140.0009 | E217140.TD1401 | 26 | 89 | 242 |
| E217140.0013 | E217140.TD1601 | 26 | 89 | 238 |
| E217185.0001 | E217185.TD0801 | 26 | 97 | 450 |
| E217185.0004 | E217185.TD1201 | 26 | 97 | 445 |

□□: □□50□ □□ □□ □ □□ d1□ □□ □□□ □ □□□□ (□□ □□ H10 □□ □□ □ H7 □□ □□ □□).
Dm = □□ Dm□□ □□□□ □□□ □□□□ □ □□ □□ □□.

# E218

+135° -30° | PA6 +G.F. | RoHS COMPLIANT

## 05 □□□ □□ / □□ □□□, □□ & □□ □□

Crank handles with threaded hole

**□□:**

□□ □□□□□.

□□□ □□□□ □□.

**□□ □□:**

□□□□ (□□□ □□ □□□□).

**□□:**

□□ (RAL 9011).

**□□ □:**

□□ □□□□□ (polyamide) (RAL 7035 cod. 13).

**□ □□:**

□□□□: (RAL 2004 cod. 02).

□□ (RAL 3000 cod. 16).

□□ (RAL 5015 cod. 07).

□□ (RAL 6024 cod. 17).

□□ (RAL 1021 cod. 10).

□□ (RAL 9011 cod. 01).

**□□□:**

□□□ □□□ □□ □□ □□□(□□□ □□ 6H).

(*) □□□ □□□ □□ □□ □□ □□ □□□(□□□ □□ 6H).

**□□□ □□□:**

□□ □□ □□ □□.

**□□□ □□:**

□□ & □□ □□M136.

**□□ □□ □□:**

□□ □ □□ □□ □□□ □□, □□□□□ □□□ □□□ □□□ □□ □ □□□□.

□□ □ □ □□ □□ □□ □ □□□ □□□ □□□□ □□ □□□□□.

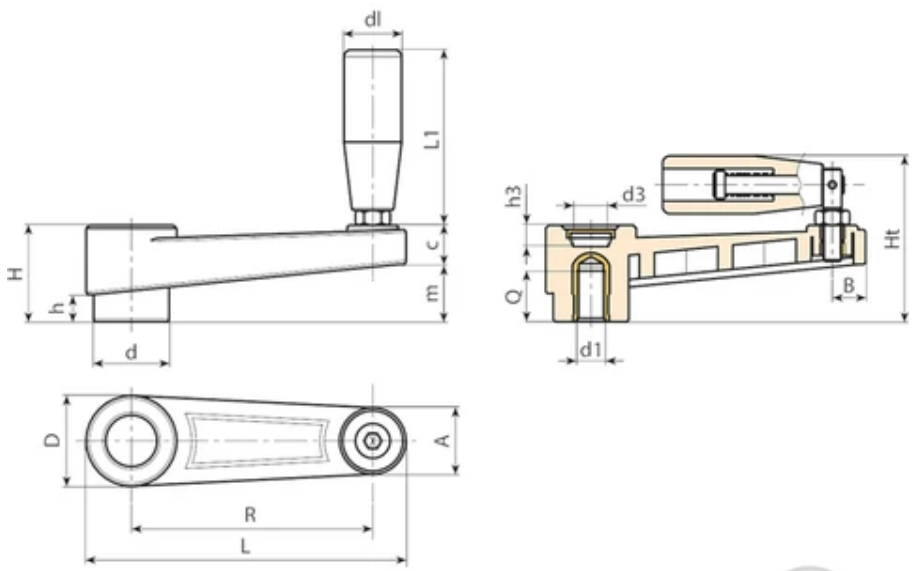


© Copyright
Boteco srl Unipersonale

| ⍰⍰ | Art. | L | R | H | Ht | D | d | m | c | A | B | h | d3 | h3 | d1 6H | Q | dl |
|---|---|---|---|---|---|---|---|---|---|---|---|---|---|---|---|---|---|
| E218065.0001 | E218065.TM0801 | 88,5 | 65 | 30 | 55 | 27,5 | 22 | 17 | 13 | 20 | 9,5 | 8 | 14,5 | 10 | M8 | 13 | 20 |
| E218065.0002 | E218065.TM1001 | 88,5 | 65 | 30 | 55 | 27,5 | 22 | 17 | 13 | 20 | 9,5 | 8 | 14,5 | 10 | M10 | 13 | 20 |
| E218065.0004 | E218065.TM1201 | 88,5 | 65 | 30 | 55 | 27,5 | 22 | 17 | 13 | 20 | 9,5 | 8 | 14,5 | 10 | M12 | 13 | 20 |
| E218080.0001 | E218080.TM0801 | 107 | 80 | 33,5 | 58 | 32 | 26 | 20,5 | 13 | 23 | 11 | 9 | 19,5 | 9,5 | M8 | 13 | 20 |
| E218080.0003 | E218080.TM1001 | 107 | 80 | 33,5 | 58 | 32 | 26 | 20,5 | 13 | 23 | 11 | 9 | 19,5 | 9,5 | M10 | 13 | 20 |
| E218080.0004 | E218080.TM1201 | 107 | 80 | 33,5 | 58 | 32 | 26 | 20,5 | 13 | 23 | 11 | 9 | 19,5 | 9,5 | M12 | 13 | 20 |
| E218110.0002 | E218110.TM1001 | 140 | 110 | 39 | 68 | 35 | 29 | 25 | 14 | 24 | 12 | 11 | 19,5 | 11 | M10 | 13 | 23,5 |
| E218110.0004 | E218110.TM1201 | 140 | 110 | 39 | 68 | 35 | 29 | 25 | 14 | 24 | 12 | 11 | 19,5 | 11 | M12 | 17 | 23,5 |
| E218110.0007 | E218110.TM1401 | 140 | 110 | 39 | 68 | 35 | 29 | 25 | 14 | 24 | 12 | 11 | 19,5 | 11 | M14 | 17 | 23,5 |
| E218140.0001 | E218140.TM1201 | 175 | 140 | 49 | 84 | 44 | 35,5 | 32 | 17 | 27 | 13 | 15,5 | 24 | 19 | M12 | 17 | 26 |
| E218140.0003 | E218140.TM1401 | 175 | 140 | 49 | 84 | 44 | 35,5 | 32 | 17 | 27 | 13 | 15,5 | 24 | 19 | M14 | 17 | 26 |
| E218140.0004 | E218140.TM1601 | 175 | 140 | 49 | 84 | 44 | 35,5 | 32 | 17 | 27 | 13 | 15,5 | 24 | 19 | M16 (*) | 17 | 26 |
| E218185.0001 | E218185.TM1201 | 223 | 185 | 55 | 90 | 47,5 | 40 | 38,5 | 16,5 | 27 | 14 | 17 | 29,5 | 21 | M12 | 17 | 26 |
| E218185.0003 | E218185.TM1401 | 223 | 185 | 55 | 90 | 47,5 | 40 | 38,5 | 16,5 | 27 | 14 | 17 | 29,5 | 21 | M14 | 17 | 26 |
| E218185.0005 | E218185.TM1601 | 223 | 185 | 55 | 90 | 47,5 | 40 | 38,5 | 16,5 | 27 | 14 | 17 | 29,5 | 21 | M16 (*) | 17 | 26 |

| ⍰⍰ | Art. | L1 | ⍰⍰(g) |
|---|---|---|---|
| E218065.0001 | E218065.TM0801 | 54 | 78 |
| E218065.0002 | E218065.TM1001 | 54 | 78 |
| E218065.0004 | E218065.TM1201 | 54 | 83 |
| E218080.0001 | E218080.TM0801 | 54 | 94 |

| ?? | Art. | L1 | ??(g) |
|---|---|---|---|
| E218080.0003 | E218080.TM1001 | 54 | 95 |
| E218080.0004 | E218080.TM1201 | 54 | 100 |
| E218110.0002 | E218110.TM1001 | 76 | 156 |
| E218110.0004 | E218110.TM1201 | 76 | 156 |
| E218110.0007 | E218110.TM1401 | 76 | 156 |
| E218140.0001 | E218140.TM1201 | 89 | 274 |
| E218140.0003 | E218140.TM1401 | 89 | 283 |
| E218140.0004 | E218140.TM1601 | 89 | 290 |
| E218185.0001 | E218185.TM1201 | 97 | 340 |
| E218185.0003 | E218185.TM1401 | 97 | 345 |
| E218185.0005 | E218185.TM1601 | 97 | 360 |

# E219

+135° -30° | PA6 +G.F. | RoHS COMPLIANT

## 05 □□□ □□ / □□ □□□, □□ □□ m129

Crank handles with threaded hole

**□□:**

□□ □□□□□.

□□□ □□□□ □□.

**□□ □□:**

□□□□ (□□□ □□ □□□□).

**□□:**

□□ (RAL 9011).

**□□ □:**

□□ □□□□□ (polyamide) (RAL 7035 cod. 13).

**□ □□:**

□□□□: (RAL 2004 cod. 02).

□□ (RAL 3000 cod. 16).

□□ (RAL 5015 cod. 07).

□□ (RAL 6024 cod. 17).

□□ (RAL 1021 cod. 10).

□□ (RAL 9011 cod. 01).

**□□□:**

□□□ □□□ □□ □□ □□□(□□□ □□ 6H).

(*) □□□ □□□ □□ □□ □□ □□ □□□(□□□ □□ 6H).

**□□□ □□□:**

□□ □□ □□ □□.

**□□□ □□:**

□□□ □□ : □□ □□ □□ M129.

**□□ □□ □□:**

□□ □ □□ □□ □□□ □□, □□□□□ □□□□ □□□ □□□ □□ □ □□□□.

□□ □ □ □□ □□ □□ □ □□□ □□□ □□□□ □□ □□□□□.

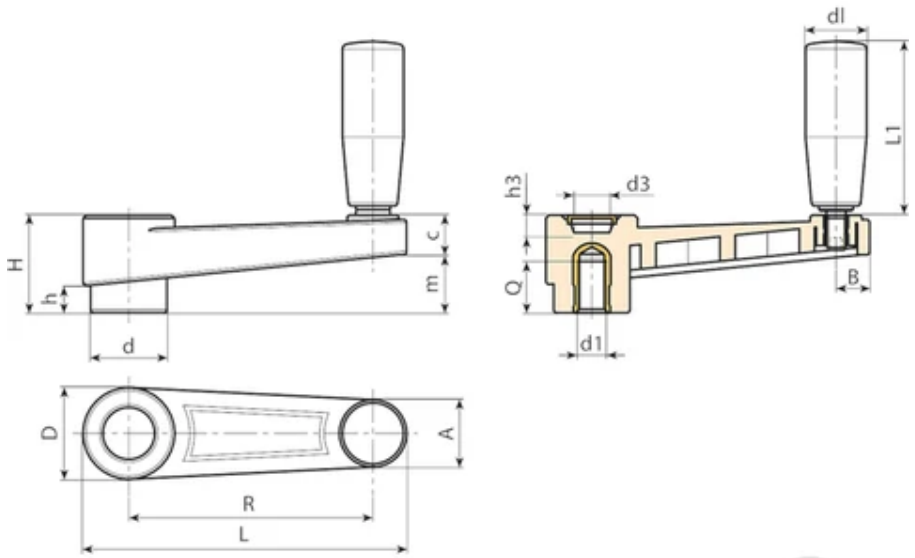


© Copyright
Boteco srl Unipersonale

| ?? | Art. | L | R | H | D | d | m | c | A | B | h | d3 | h3 | d1 6H | Q | dl | L1 |
|---|---|---|---|---|---|---|---|---|---|---|---|---|---|---|---|---|---|
| E219065.0001 | E219065.TM0801 | 89 | 65 | 30 | 27,5 | 22 | 17 | 13 | 20 | 9,5 | 8 | 14,5 | 10 | M8 | 13 | 20 | 52 |
| E219065.0002 | E219065.TM1001 | 89 | 65 | 30 | 27,5 | 22 | 17 | 13 | 20 | 9,5 | 8 | 14,5 | 10 | M10 | 13 | 20 | 52 |
| E219065.0003 | E219065.TM1201 | 89 | 65 | 30 | 27,5 | 22 | 17 | 13 | 20 | 9,5 | 8 | 14,5 | 10 | M12 | 13 | 20 | 52 |
| E219080.0001 | E219080.TM0801 | 107 | 80 | 33,5 | 32 | 26 | 20,5 | 13 | 23 | 11 | 9 | 19,5 | 9,5 | M8 | 13 | 20 | 52 |
| E219080.0002 | E219080.TM1001 | 107 | 80 | 33,5 | 32 | 26 | 20,5 | 13 | 23 | 11 | 9 | 19,5 | 9,5 | M10 | 13 | 20 | 52 |
| E219080.0003 | E219080.TM1201 | 107 | 80 | 33,5 | 32 | 26 | 20,5 | 13 | 23 | 11 | 9 | 19,5 | 9,5 | M12 | 13 | 20 | 52 |
| E219110.0001 | E219110.TM1001 | 140 | 110 | 39 | 35 | 29 | 25 | 14 | 24 | 12 | 11 | 19,5 | 11 | M10 | 13 | 23,5 | 63 |
| E219110.0002 | E219110.TM1201 | 140 | 110 | 39 | 35 | 29 | 25 | 14 | 24 | 12 | 11 | 19,5 | 11 | M12 | 17 | 23,5 | 63 |
| E219110.0003 | E219110.TM1401 | 140 | 110 | 39 | 35 | 29 | 25 | 14 | 24 | 12 | 11 | 19,5 | 11 | M14 | 17 | 23,5 | 63 |
| E219140.0001 | E219140.TM1201 | 175 | 140 | 49 | 44 | 35,5 | 32 | 17 | 27 | 13 | 15,5 | 24 | 19 | M12 | 17 | 25 | 72 |
| E219140.0002 | E219140.TM1401 | 175 | 140 | 49 | 44 | 35,5 | 32 | 17 | 27 | 13 | 15,5 | 24 | 19 | M14 | 17 | 25 | 72 |
| E219140.0003 | E219140.TM1601 | 175 | 140 | 49 | 44 | 35,5 | 32 | 17 | 27 | 13 | 15,5 | 24 | 19 | (*) M16 | 17 | 25 | 72 |
| E219185.0001 | E219185.TM1201 | 223 | 185 | 55 | 47,5 | 40 | 38,5 | 16,5 | 27 | 14 | 17 | 29,5 | 21 | M12 | 17 | 26 | 82 |
| E219185.0002 | E219185.TM1401 | 223 | 185 | 55 | 47,5 | 40 | 38,5 | 16,5 | 27 | 14 | 17 | 29,5 | 21 | M14 | 17 | 26 | 82 |
| E219185.0003 | E219185.TM1601 | 223 | 185 | 55 | 47,5 | 40 | 38,5 | 16,5 | 27 | 14 | 17 | 29,5 | 21 | (*) M16 | 17 | 26 | 82 |

| ?? | Art. | ??(g) |
|---|---|---|
| E219065.0001 | E219065.TM0801 | 79 |
| E219065.0002 | E219065.TM1001 | 82 |
| E219065.0003 | E219065.TM1201 | 85 |
| E219080.0001 | E219080.TM0801 | 95 |

| ?? | Art. | ??(g) |
|---|---|---|
| E219080.0002 | E219080.TM1001 | 99 |
| E219080.0003 | E219080.TM1201 | 102 |
| E219110.0001 | E219110.TM1001 | 150 |
| E219110.0002 | E219110.TM1201 | 160 |
| E219110.0003 | E219110.TM1401 | 165 |
| E219140.0001 | E219140.TM1201 | 262 |
| E219140.0002 | E219140.TM1401 | 249 |
| E219140.0003 | E219140.TM1601 | 275 |
| E219185.0001 | E219185.TM1201 | 312 |
| E219185.0002 | E219185.TM1401 | 320 |
| E219185.0003 | E219185.TM1601 | 331 |

# E220

+135° -30° | PA6 +G.F. | RoHS COMPLIANT

## 05 □□□ □□ / □□ □□□, □□ □□ m145

Crank handles with threaded hole

**□□:**

□□ □□□□□ □□, □□ □ □□□□ □□ □□□ □□□□□.

**□□ □□:**

□□□□ (□□□ □□ □□□□).

**□□:**

□□ (RAL 9011).

**□□ □:**

□□ □□□□□ (polyamide) (RAL 7035 cod. 13).

**□ □□:**

□□□□: (RAL 2004 cod. 02).

□□ (RAL 3000 cod. 16).

□□ (RAL 5015 cod. 07).

□□ (RAL 6024 cod. 17).

□□ (RAL 1021 cod. 10).

□□ (RAL 9011 cod. 01).

**□□□:**

□□□ □□□ □□ □□ □□□(□□□ □□ 6H).

(*) □□□ □□□ □□ □□ □□ □□ □□□(□□□ □□ 6H).

**□□□ □□□:**

□□ □□ □□ □□.

**□□□ □□:**

□□ □□ □□ M145.

**□□ □□ □□:**

□□ □ □□ □□ □□□ □□, □□□□ □□□ □□□ □□□ □□ □ □□□□.

□□ □ □ □□ □□ □□ □ □□□ □□□ □□□□ □□ □□□□□.

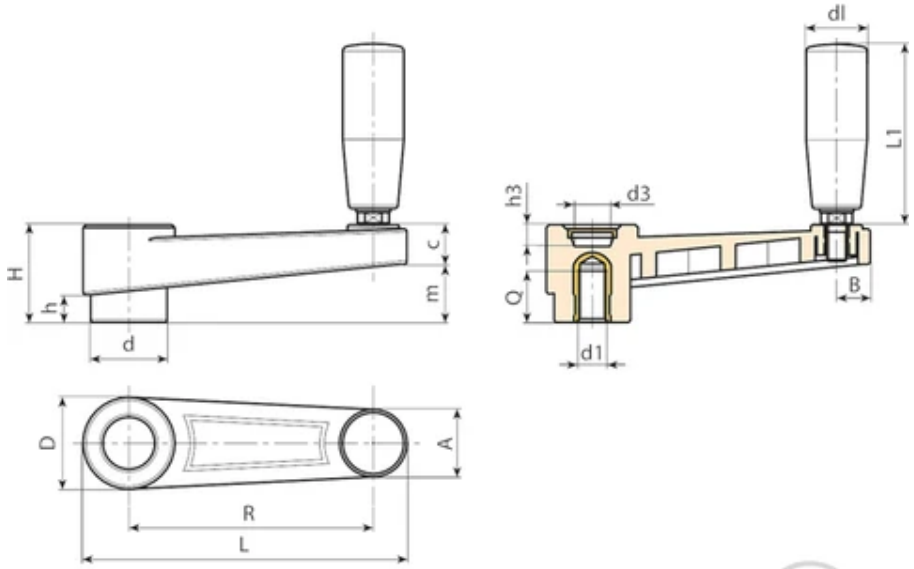


© Copyright
Boteco srl Unipersonale

| ⍰⍰ | Art. | L | R | H | D | d | m | c | A | B | h | d3 | h3 | d1 6H | Q | dl | L1 |
|---|---|---|---|---|---|---|---|---|---|---|---|---|---|---|---|---|---|
| E220065.0001 | E220065.TM0801 | 89 | 65 | 30 | 27,5 | 22 | 17 | 13 | 20 | 9,5 | 8 | 14,5 | 10 | M8 | 13 | 20 | 56 |
| E220065.0002 | E220065.TM1001 | 89 | 65 | 30 | 27,5 | 22 | 17 | 13 | 20 | 9,5 | 8 | 14,5 | 10 | M10 | 13 | 20 | 56 |
| E220065.0003 | E220065.TM1201 | 89 | 65 | 30 | 27,5 | 22 | 17 | 13 | 20 | 9,5 | 8 | 14,5 | 10 | M12 | 13 | 20 | 56 |
| E220080.0001 | E220080.TM0801 | 107 | 80 | 33,5 | 32 | 26 | 20,5 | 13 | 23 | 11 | 9 | 19,5 | 9,5 | M8 | 13 | 20 | 56 |
| E220080.0002 | E220080.TM1001 | 107 | 80 | 33,5 | 32 | 26 | 20,5 | 13 | 23 | 11 | 9 | 19,5 | 9,5 | M10 | 13 | 20 | 56 |
| E220080.0003 | E220080.TM1201 | 107 | 80 | 33,5 | 32 | 26 | 20,5 | 13 | 23 | 11 | 9 | 19,5 | 9,5 | M12 | 13 | 20 | 56 |
| E220110.0001 | E220110.TM1001 | 140 | 110 | 39 | 35 | 29 | 25 | 14 | 24 | 12 | 11 | 19,5 | 11 | M10 | 13 | 23,5 | 68 |
| E220110.0002 | E220110.TM1201 | 140 | 110 | 39 | 35 | 29 | 25 | 14 | 24 | 12 | 11 | 19,5 | 11 | M12 | 17 | 23,5 | 68 |
| E220110.0003 | E220110.TM1401 | 140 | 110 | 39 | 35 | 29 | 25 | 14 | 24 | 12 | 11 | 19,5 | 11 | M14 | 17 | 23,5 | 68 |
| E220140.0001 | E220140.TM1201 | 175 | 140 | 49 | 44 | 35,5 | 33 | 17 | 27 | 13 | 15,5 | 24 | 19 | M12 | 17 | 25 | 77 |
| E220140.0002 | E220140.TM1401 | 175 | 140 | 49 | 44 | 35,5 | 32 | 17 | 27 | 13 | 15,5 | 24 | 19 | M14 | 17 | 25 | 77 |
| E220140.0003 | E220140.TM1601 | 175 | 140 | 49 | 44 | 35,5 | 32 | 17 | 27 | 13 | 15,5 | 24 | 19 | (*) M16 | 17 | 25 | 77 |
| E220185.0001 | E220185.TM1201 | 223 | 185 | 55 | 47,5 | 40 | 38,5 | 16,5 | 27 | 14 | 17 | 29,5 | 21 | M12 | 17 | 26 | 86 |
| E220185.0002 | E220185.TM1401 | 223 | 185 | 55 | 47,5 | 40 | 38,5 | 16,5 | 27 | 14 | 17 | 29,5 | 21 | M14 | 17 | 26 | 86 |
| E220185.0003 | E220185.TM1601 | 223 | 185 | 55 | 47,5 | 40 | 38,5 | 16,5 | 27 | 14 | 17 | 29,5 | 21 | (*) M16 | 17 | 26 | 86 |

| ⍰⍰ | Art. | ⍰⍰(g) |
|---|---|---|
| E220065.0001 | E220065.TM0801 | 69 |
| E220065.0002 | E220065.TM1001 | 72 |
| E220065.0003 | E220065.TM1201 | 75 |
| E220080.0001 | E220080.TM0801 | 85 |

| ?? | Art. | ??(g) |
|---|---|---|
| E220080.0002 | E220080.TM1001 | 89 |
| E220080.0003 | E220080.TM1201 | 92 |
| E220110.0001 | E220110.TM1001 | 149 |
| E220110.0002 | E220110.TM1201 | 151 |
| E220110.0003 | E220110.TM1401 | 154 |
| E220140.0001 | E220140.TM1201 | 228 |
| E220140.0002 | E220140.TM1401 | 213 |
| E220140.0003 | E220140.TM1601 | 241 |
| E220185.0001 | E220185.TM1201 | 304 |
| E220185.0002 | E220185.TM1401 | 310 |
| E220185.0003 | E220185.TM1601 | 321 |

# E221

+135° -30° | PA6 +G.F. | RoHS COMPLIANT

## 05 □□□ □□ / □ □□□, □□ □□ M145

Crank handles with smooth bore

**□□:**

□□ □□□□□.

□□□ □□□□ □□.

**□□ □□:**

□□□□ (□□□ □□ □□□□).

**□□:**

□□ (RAL 9011).

**□□ □:**

□□ □□□□□ (polyamide) (RAL 7035 cod. 13).

**□□ □ □□:**

□□□□: (RAL 2004 cod. 02).

□□ (RAL 3000 cod. 16).

□□ (RAL 5015 cod. 07).

□□ (RAL 6024 cod. 17).

□□ (RAL 1021 cod. 10).

□□ (RAL 9011 cod. 01).

**□□□:**

□□□□ □□ □□□ □□ □□ □□ □□ □□□(□□ H10).

**□□□ □□□:**

□□ □□ □□ □□.

**□□□ □□:**

□□ □□□ M145.

**□□ □□ □□:**

□□ □□ □□ □□□, □□ d1 □ □□□ □□ □□.

□□ □□ □□ □□□, □□ □□□ □□ □□ □□ □□□ □□ □□.

□□ □ □ □□ □□ □□ □ □□□ □□□ □□□□ □□ □□□□□.

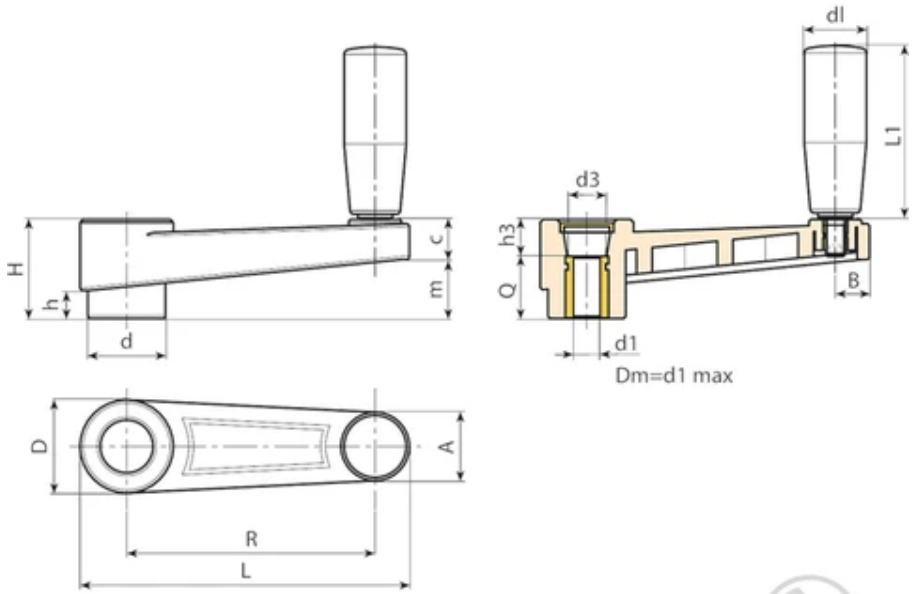


© Copyright
Boteco srl Unipersonale

| ⍰⍰ | Art. | L | R | H | D | d | m | c | A | B | h | d3 | h3 | dm | d1 H10 | Q | dl |
|---|---|---|---|---|---|---|---|---|---|---|---|---|---|---|---|---|---|
| E221065.0003 | E221065.TP0501 | 89 | 65 | 30 | 27,5 | 22 | 17 | 13 | 20 | 9,5 | 8 | 14,5 | 10 | 12 | 5 | 20 | 20 |
| E221065.0001 | E221065.TD1001 | 89 | 65 | 30 | 27,5 | 22 | 17 | 13 | 20 | 9,5 | 8 | 14,5 | 10 | 12 | 10 | 20 | 20 |
| E221065.0002 | E221065.TD1201 | 89 | 65 | 30 | 27,5 | 22 | 17 | 13 | 20 | 9,5 | 8 | 14,5 | 10 | 12 | 12 | 20 | 20 |
| E221080.0003 | E221080.TP0501 | 107 | 80 | 33,5 | 32 | 26 | 20,5 | 13 | 23 | 11 | 9 | 19,5 | 9,5 | 14 | 5 | 24 | 20 |
| E221080.0001 | E221080.TD1001 | 107 | 80 | 33,5 | 32 | 26 | 20,5 | 13 | 23 | 11 | 9 | 19,5 | 9,5 | 14 | 10 | 24 | 20 |
| E221080.0002 | E221080.TD1201 | 107 | 80 | 33,5 | 32 | 26 | 20,5 | 13 | 23 | 11 | 9 | 19,5 | 9,5 | 14 | 12 | 24 | 20 |
| E221110.0001 | E221110.TD0801 | 140 | 110 | 39 | 35 | 29 | 25 | 14 | 24 | 12 | 11 | 19,5 | 11 | 14 | 8 | 28 | 23,5 |
| E221110.0002 | E221110.TD1001 | 140 | 110 | 39 | 35 | 29 | 25 | 14 | 24 | 12 | 11 | 19,5 | 11 | 14 | 10 | 28 | 23,5 |
| E221110.0003 | E221110.TD1201 | 140 | 110 | 39 | 35 | 29 | 25 | 14 | 24 | 12 | 11 | 19,5 | 11 | 14 | 12 | 28 | 23,5 |
| E221140.0001 | E221140.TD0801 | 175 | 140 | 49 | 44 | 35,5 | 32 | 17 | 27 | 13 | 15,5 | 24 | 19 | 20 | 8 | 30 | 25 |
| E221140.0002 | E221140.TD1201 | 175 | 140 | 49 | 44 | 35,5 | 32 | 17 | 27 | 13 | 15,5 | 24 | 19 | 20 | 12 | 30 | 25 |
| E221140.0003 | E221140.TD1401 | 175 | 140 | 49 | 44 | 35,5 | 32 | 17 | 27 | 13 | 15,5 | 24 | 19 | 20 | 14 | 30 | 25 |
| E221140.0004 | E221140.TD1601 | 175 | 140 | 49 | 44 | 35,5 | 32 | 17 | 27 | 13 | 15,5 | 24 | 19 | 20 | 16 | 30 | 25 |
| E221185.0001 | E221185.TD0801 | 223 | 185 | 55 | 47,5 | 40 | 38,5 | 16,5 | 27 | 14 | 17 | 29,5 | 21 | 22 | 8 | 34 | 26 |
| E221185.0002 | E221185.TD1201 | 223 | 185 | 55 | 47,5 | 40 | 38,5 | 16,5 | 27 | 14 | 17 | 29,5 | 21 | 22 | 12 | 34 | 26 |

⍰⍰: ⍰⍰50⍰ ⍰⍰ ⍰⍰ ⍰ ⍰⍰ d1⍰ ⍰⍰ ⍰⍰⍰ ⍰ ⍰⍰⍰⍰ (⍰⍰ ⍰⍰H10 ⍰⍰ ⍰⍰ ⍰H7 ⍰⍰ ⍰⍰ ⍰⍰).
Dm = ⍰⍰Dm⍰⍰ ⍰⍰⍰⍰ ⍰⍰⍰ ⍰⍰⍰⍰ ⍰ ⍰⍰ ⍰⍰ ⍰⍰.

| ⍰⍰ | Art. | L1 | ⍰⍰(g) |
|---|---|---|---|
| E221065.0003 | E221065.TP0501 | 56 | 101 |
| E221065.0001 | E221065.TD1001 | 56 | 107 |

| ?? | Art. | L1 | ??(g) |
|---|---|---|---|
| E221065.0002 | E221065.TD1201 | 56 | 104 |
| E221080.0003 | E221080.TP0501 | 56 | 125 |
| E221080.0001 | E221080.TD1001 | 56 | 130 |
| E221080.0002 | E221080.TD1201 | 56 | 127 |
| E221110.0001 | E221110.TD0801 | 68 | 175 |
| E221110.0002 | E221110.TD1001 | 68 | 172 |
| E221110.0003 | E221110.TD1201 | 68 | 169 |
| E221140.0001 | E221140.TD0801 | 77 | 263 |
| E221140.0002 | E221140.TD1201 | 77 | 257 |
| E221140.0003 | E221140.TD1401 | 77 | 253 |
| E221140.0004 | E221140.TD1601 | 77 | 249 |
| E221185.0001 | E221185.TD0801 | 86 | 440 |
| E221185.0002 | E221185.TD1201 | 86 | 433 |

??: ??50? ?? ?? ? ?? d1? ?? ??? ? ???? (?? ?? H10 ?? ?? ? H7 ?? ?? ??).
Dm = ?? Dm?? ???? ??? ???? ? ?? ?? ??.

# E222

+135°
-30°

PA6
+G.F.

RoHS✓
COMPLIANT

## 05 □□□ □□ / □ □□□, □□ □□ M129

Crank handles with smooth bore

**□□:**

□□ □□□□□.

□□□ □□□□ □□.

**□□ □□:**

□□□□ (□□□ □□ □□□□).

**□□:**

□□ (RAL 9011).

**□□ □:**

□□ □□□□□ (polyamide) (RAL 7035 cod. 13).

**□ □□:**

□□□□: (RAL 2004 cod. 02).

□□ (RAL 3000 cod. 16).

□□ (RAL 5015 cod. 07).

□□ (RAL 6024 cod. 17).

□□ (RAL 1021 cod. 10).

□□ (RAL 9011 cod. 01).

**□□□:**

□□□□ □□ □□□ □□ □□ □□ □□ □□□(□□ H10).

**□□□ □□□:**

□□ □□ □□ □□.

**□□□ □□:**

□□□ □□: □□ □□ □□ M129.

**□□ □□ □□:**

□□ □□ □□ □□□, □□ d1 □ □□□ □□ □□.

□□ □□ □□ □□□, □□ □□□ □□ □□ □□ □□□ □□ □□.

□□ □ □ □□ □□ □□ □ □□□ □□□ □□□□ □□ □□□□□.

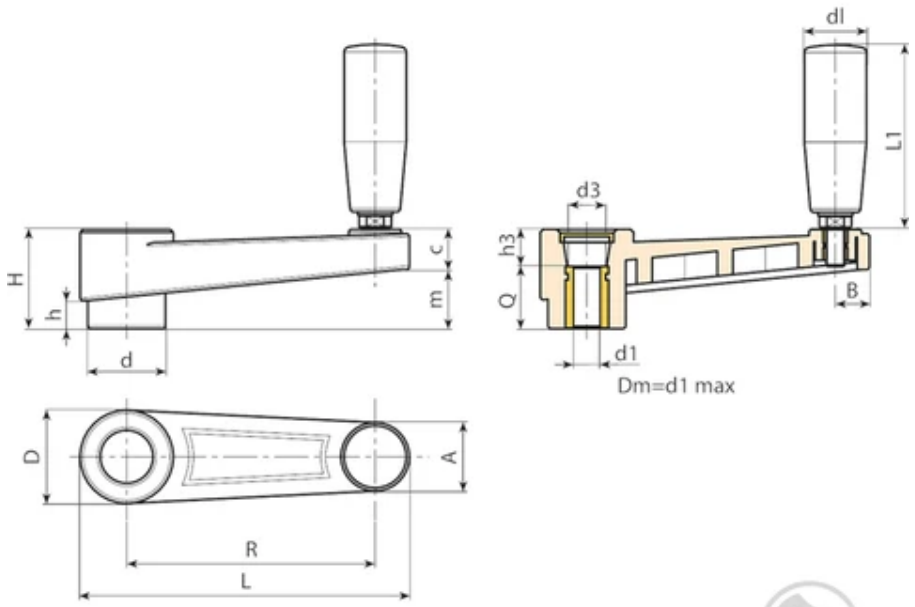


© Copyright
Boteco srl Unipersonale

| ?? | Art. | L | R | H | D | d | m | c | A | B | h | d3 | h3 | dm | d1 H10 | Q | dl |
|---|---|---|---|---|---|---|---|---|---|---|---|---|---|---|---|---|---|
| E222065.0008 | E222065.TP0501 | 89 | 65 | 30 | 27,5 | 22 | 17 | 13 | 20 | 9,5 | 8 | 14,5 | 10 | 12 | 5 | 20 | 20 |
| E222065.0003 | E222065.TD1001 | 89 | 65 | 30 | 27,5 | 22 | 17 | 13 | 20 | 9,5 | 8 | 14,5 | 10 | 12 | 10 | 20 | 20 |
| E222065.0004 | E222065.TD1201 | 89 | 65 | 30 | 27,5 | 22 | 17 | 13 | 20 | 9,5 | 8 | 14,5 | 10 | 12 | 12 | 20 | 20 |
| E222080.0013 | E222080.TP0501 | 107 | 80 | 33,5 | 32 | 26 | 20,5 | 13 | 23 | 11 | 9 | 19,5 | 9,5 | 14 | 5 | 24 | 20 |
| E222080.0003 | E222080.TD1001 | 107 | 80 | 33,5 | 32 | 26 | 20,5 | 13 | 23 | 11 | 9 | 19,5 | 9,5 | 14 | 10 | 24 | 20 |
| E222080.0005 | E222080.TD1201 | 107 | 80 | 33,5 | 32 | 26 | 20,5 | 13 | 23 | 11 | 9 | 19,5 | 9,5 | 14 | 12 | 24 | 20 |
| E222110.0001 | E222110.TD0801 | 140 | 110 | 39 | 35 | 29 | 25 | 14 | 24 | 12 | 11 | 19,5 | 11 | 14 | 8 | 28 | 23,5 |
| E222110.0007 | E222110.TD1001 | 140 | 110 | 39 | 35 | 29 | 25 | 14 | 24 | 12 | 11 | 19,5 | 11 | 14 | 10 | 28 | 23,5 |
| E222110.0004 | E222110.TD1201 | 140 | 110 | 39 | 35 | 29 | 25 | 14 | 24 | 12 | 11 | 19,5 | 11 | 14 | 12 | 28 | 23,5 |
| E222140.0001 | E222140.TD0801 | 175 | 140 | 49 | 44 | 35,5 | 32 | 17 | 27 | 13 | 15,5 | 24 | 19 | 20 | 8 | 30 | 25 |
| E222140.0003 | E222140.TD1201 | 175 | 140 | 49 | 44 | 35,5 | 32 | 17 | 27 | 13 | 15,5 | 24 | 19 | 20 | 12 | 30 | 25 |
| E222140.0004 | E222140.TD1401 | 175 | 140 | 49 | 44 | 35,5 | 32 | 17 | 27 | 13 | 15,5 | 24 | 19 | 20 | 14 | 30 | 25 |
| E222140.0005 | E222140.TD1601 | 175 | 140 | 49 | 44 | 35,5 | 32 | 17 | 27 | 13 | 15,5 | 24 | 19 | 20 | 16 | 30 | 25 |
| E222185.0001 | E222185.TD0801 | 223 | 185 | 55 | 47,5 | 40 | 38,5 | 16,5 | 27 | 14 | 17 | 29,5 | 21 | 22 | 08 | 34 | 26 |
| E222185.0004 | E222185.TD1201 | 223 | 185 | 55 | 47,5 | 40 | 38,5 | 16,5 | 27 | 14 | 17 | 29,5 | 21 | 22 | 12 | 34 | 26 |

??: ??50?? ??? ?? d1?? ??? ?? ???? (?? ?? H10 ??? ?? H7 ??? ??).
Dm = ?? Dm?? ???? ??? ???? ?? ?? ??.

| ?? | Art. | L1 | ??(g) |
|---|---|---|---|
| E222065.0008 | E222065.TP0501 | 52 | 111 |
| E222065.0003 | E222065.TD1001 | 52 | 117 |

| □□ | Art. | L1 | □□(g) |
|---|---|---|---|
| E222065.0004 | E222065.TD1201 | 52 | 114 |
| E222080.0013 | E222080.TP0501 | 52 | 135 |
| E222080.0003 | E222080.TD1001 | 52 | 140 |
| E222080.0005 | E222080.TD1201 | 52 | 136 |
| E222110.0001 | E222110.TD0801 | 63 | 182 |
| E222110.0007 | E222110.TD1001 | 63 | 179 |
| E222110.0004 | E222110.TD1201 | 63 | 175 |
| E222140.0001 | E222140.TD0801 | 72 | 271 |
| E222140.0003 | E222140.TD1201 | 72 | 265 |
| E222140.0004 | E222140.TD1401 | 72 | 261 |
| E222140.0005 | E222140.TD1601 | 72 | 255 |
| E222185.0001 | E222185.TD0801 | 82 | 450 |
| E222185.0004 | E222185.TD1201 | 82 | 442 |

□□: □□50□ □□ □□ □ □□ d1□ □□ □□□ □ □□□□ (□□ □□ H10 □□ □□ □ H7 □□ □□ □□).
Dm = □□ Dm□□ □□□□ □□□ □□□□ □ □□ □□ □□.

# E230

+135°
-30°

PA6
+G.F.

RoHS✓
COMPLIANT

## 05 ???? ?? / ?? ?, ?? ??

Crank handles with hexagonal hole/stud

**??:**

?? ?????.

??? ???? ??.

**?? ??:**

???? (??? ?? ????).

**??:**

?? (RAL 9011).

**?? ?:**

?? ?????? (polyamide) (RAL 7035 cod. 13).

**? ??:**

????: (RAL 2004 cod. 02).

?? (RAL 3000 cod. 16).

?? (RAL 5015 cod. 07).

?? (RAL 6024 cod. 17).

?? (RAL 1021 cod. 10).

?? (RAL 9011 cod. 01).

**???:**

??? ?? ??? ?? ?? (?? ?? ??? ?? ??, ?? ?? H10).

**??? ???:**

?? ?? ?? ??.

**??? ??:**

??? ??? ?? M144.

**?? ?? ??:**

?? ?? ?? ???, ?? ??? ?? ?? ?? ??? ?? ??.

?? ? ? ?? ?? ?? ? ??? ??? ???? ?? ??????.

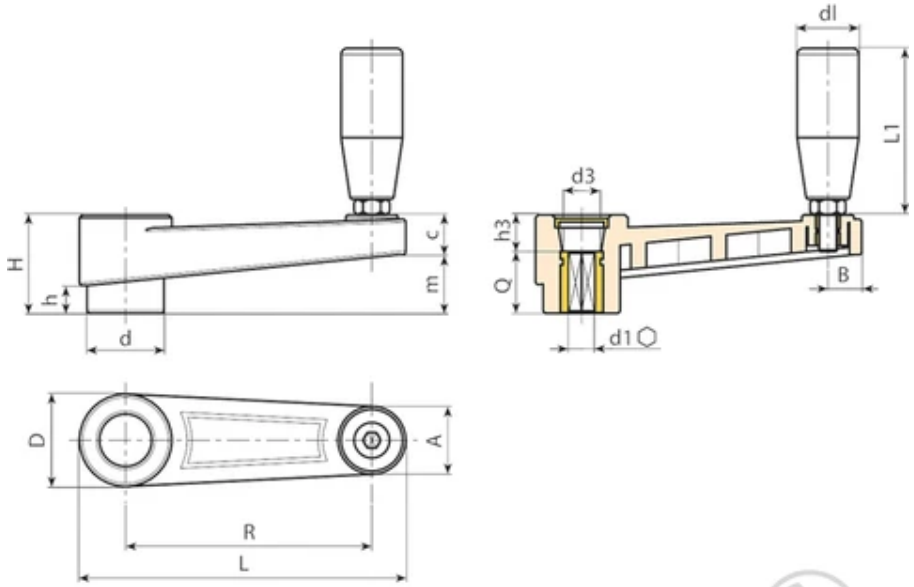


© Copyright
Boteco srl Unipersonale

| ?? | Art. | L | R | H | D | d | m | c | A | B | h | d3 | h3 | d1 H10 | Q | dl | L1 |
|---|---|---|---|---|---|---|---|---|---|---|---|---|---|---|---|---|---|
| E230065.0002 | E230065.TE0601P | 88,5 | 65 | 30 | 27,5 | 22 | 17 | 13 | 20 | 9,5 | 8 | 14,5 | 10 | 6 | 20 | 19 | 54 |
| E230065.0001 | E230065.TE0801P | 88,5 | 65 | 30 | 27,5 | 22 | 17 | 13 | 20 | 9,5 | 8 | 14,5 | 10 | 8 | 20 | 19 | 54 |
| E230080.0001 | E230080.TE1001P | 107 | 80 | 33,5 | 32 | 26 | 20,5 | 13 | 23 | 11 | 9 | 19,5 | 9,5 | 10 | 24 | 19 | 54 |
| E230080.0002 | E230080.TE1201P | 107 | 80 | 33,5 | 32 | 26 | 20,5 | 13 | 23 | 11 | 9 | 19,5 | 9,5 | 12 | 24 | 19 | 54 |
| E230110.0001 | E230110.TE1201P | 140 | 110 | 39 | 35 | 29 | 22 | 14 | 24 | 12 | 11 | 19,5 | 11 | 12 | 28 | 21 | 66 |
| E230110.0002 | E230110.TE1401P | 140 | 110 | 39 | 35 | 29 | 22 | 14 | 24 | 12 | 11 | 19,5 | 11 | 14 | 28 | 21 | 66 |
| E230140.0001 | E230140.TE1401P | 175 | 140 | 49 | 44 | 35,5 | 32 | 17 | 27 | 13 | 15,5 | 24 | 19 | 14 | 30 | 23,5 | 76 |
| E230140.0002 | E230140.TE1601P | 175 | 140 | 49 | 44 | 35,5 | 32 | 17 | 27 | 13 | 15,5 | 24 | 19 | 16 | 30 | 23,5 | 76 |
| E230185.0001 | E230185.TE1601P | 223 | 185 | 55 | 47,5 | 40 | 38,5 | 16,5 | 27 | 14 | 17 | 29,5 | 19 | 16 | 34 | 25,5 | 87 |
| E230185.0002 | E230185.TE1701P | 223 | 185 | 55 | 47,5 | 40 | 38,5 | 16,5 | 27 | 14 | 17 | 29,5 | 19 | 17 | 34 | 25,5 | 87 |

| ?? | Art. | ??(g) |
|---|---|---|
| E230065.0002 | E230065.TE0601P | 96 |
| E230065.0001 | E230065.TE0801P | 93 |
| E230080.0001 | E230080.TE1001P | 105 |
| E230080.0002 | E230080.TE1201P | 103 |
| E230110.0001 | E230110.TE1201P | 152 |
| E230110.0002 | E230110.TE1401P | 149 |
| E230140.0001 | E230140.TE1401P | 242 |
| E230140.0002 | E230140.TE1601P | 238 |
| E230185.0001 | E230185.TE1601P | 385 |

| ?? | Art. | ??(g) |
| --- | --- | --- |
| E230185.0002 | E230185.TE1701P | 385 |

# E231

+135°
-30°

PA6
+G.F.

RoHS✓
COMPLIANT

## 05 □□□ □□ / □□ □, □□ □□ M145

Crank handles with hexagonal hole/stud

**□□:**

□□ □□□□□.

□□□ □□□□ □□.

**□□ □□:**

□□□□ (□□□ □□ □□□□).

**□□:**

□□ (RAL 9011).

**□□ □:**

□□ □□□□□ (polyamide) (RAL 7035 cod. 13).

**□ □□:**

□□□□: (RAL 2004 cod. 02).

□□ (RAL 3000 cod. 16).

□□ (RAL 5015 cod. 07).

□□ (RAL 6024 cod. 17).

□□ (RAL 1021 cod. 10).

□□ (RAL 9011 cod. 01).

**□□□:**

□□□ □□ □□□ □□ □□ (□□ □□ □□□ □□ □□, □□ □□ H10).

**□□□ □□□:**

□□ □□ □□ □□.

**□□□ □□:**

□□ □□□ M145.

**□□ □□ □□:**

□□ □□ □□ □□□, □□ □□□ □□ □□ □□ □□□ □□ □□.

□□ □ □ □□ □□ □□ □ □□□ □□□ □□□□ □□ □□□□□.

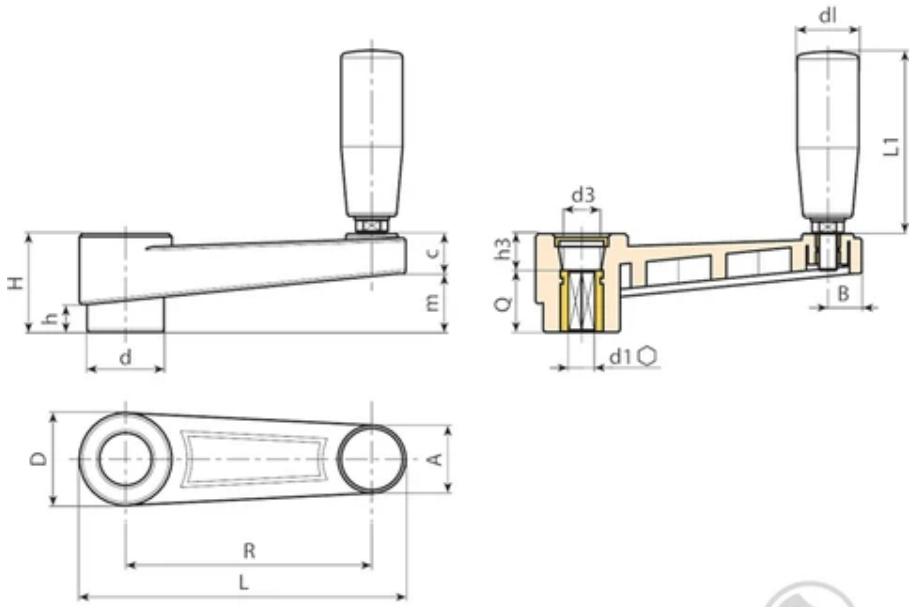


© Copyright
Boteco srl Unipersonale

| ?? | Art. | L | R | H | D | d | m | c | A | B | h | d3 | h3 | d1 H10 | Q | dl | L1 |
|---|---|---|---|---|---|---|---|---|---|---|---|---|---|---|---|---|---|
| E231065.0001 | E231065.TE0601P | 89 | 65 | 30 | 27,5 | 22 | 17 | 13 | 20 | 9,5 | 8 | 14,5 | 10 | 6 | 20 | 20 | 56 |
| E231065.0002 | E231065.TE0801P | 89 | 65 | 30 | 27,5 | 22 | 17 | 13 | 20 | 9,5 | 8 | 14,5 | 10 | 8 | 20 | 20 | 56 |
| E231080.0002 | E231080.TE1001P | 107 | 80 | 33,5 | 32 | 26 | 20,5 | 13 | 23 | 11 | 9 | 19,5 | 9,5 | 10 | 24 | 20 | 56 |
| E231080.0001 | E231080.TE1201P | 107 | 80 | 33,5 | 32 | 26 | 20,5 | 13 | 23 | 11 | 9 | 19,5 | 9,5 | 12 | 24 | 20 | 56 |
| E231110.0001 | E231110.TE1201P | 140 | 110 | 39 | 35 | 29 | 22 | 14 | 24 | 12 | 11 | 19,5 | 11 | 12 | 28 | 23,5 | 68 |
| E231110.0002 | E231110.TE1401P | 140 | 110 | 39 | 35 | 29 | 22 | 14 | 24 | 12 | 11 | 19,5 | 11 | 14 | 28 | 23,5 | 68 |
| E231140.0001 | E231140.TE1401P | 175 | 140 | 49 | 44 | 35,5 | 32 | 17 | 27 | 13 | 15,5 | 24 | 19 | 14 | 30 | 25 | 77 |
| E231140.0002 | E231140.TE1601P | 175 | 140 | 49 | 44 | 35,5 | 32 | 17 | 27 | 13 | 15,5 | 24 | 19 | 16 | 30 | 25 | 77 |
| E231185.0001 | E231185.TE1601P | 223 | 185 | 55 | 47,5 | 40 | 38,5 | 16,5 | 27 | 14 | 17 | 29,5 | 19 | 16 | 34 | 26 | 86 |
| E231185.0002 | E231185.TE1701P | 223 | 185 | 55 | 47,5 | 40 | 38,5 | 16,5 | 27 | 14 | 17 | 29,5 | 19 | 17 | 34 | 26 | 86 |

| ?? | Art. | ??(g) |
|---|---|---|
| E231065.0001 | E231065.TE0601P | 111 |
| E231065.0002 | E231065.TE0801P | 108 |
| E231080.0002 | E231080.TE1001P | 130 |
| E231080.0001 | E231080.TE1201P | 128 |
| E231110.0001 | E231110.TE1201P | 177 |
| E231110.0002 | E231110.TE1401P | 173 |
| E231140.0001 | E231140.TE1401P | 267 |
| E231140.0002 | E231140.TE1601P | 262 |
| E231185.0001 | E231185.TE1601P | 400 |

| ?? | Art. | ??(g) |
| --- | --- | --- |
| E231185.0002 | E231185.TE1701P | 398 |

# E232

+135°
-30°

PA6
+G.F.

RoHS
COMPLIANT

## 05 □□□ □□ / □□ □, □□ □□ M129

Crank handles with hexagonal hole/stud

**□□:**

□□ □□□□□.

□□□ □□□□ □□.

**□□ □□:**

□□□□ (□□□ □□ □□□□).

**□□:**

□□ (RAL 9011).

**□□ □:**

□□ □□□□□ (polyamide) (RAL 7035 cod. 13).

**□ □□:**

□□□□: (RAL 2004 cod. 02).

□□ (RAL 3000 cod. 16).

□□ (RAL 5015 cod. 07).

□□ (RAL 6024 cod. 17).

□□ (RAL 1021 cod. 10).

□□ (RAL 9011 cod. 01).

**□□□:**

□□□ □□ □□□ □□ □□ (□□ □□ □□□ □□ □□, □□ □□ H10).

**□□□ □□□:**

□□ □□ □□ □□.

**□□□ □□:**

□□□ □□: □□ □□ □□ M129.

**□□ □□ □□:**

□□ □□ □□ □□□, □□ □□□ □□ □□ □□ □□□ □□ □□.

□□ □ □ □□ □□ □□ □ □□□ □□□ □□□□ □□ □□□□□.

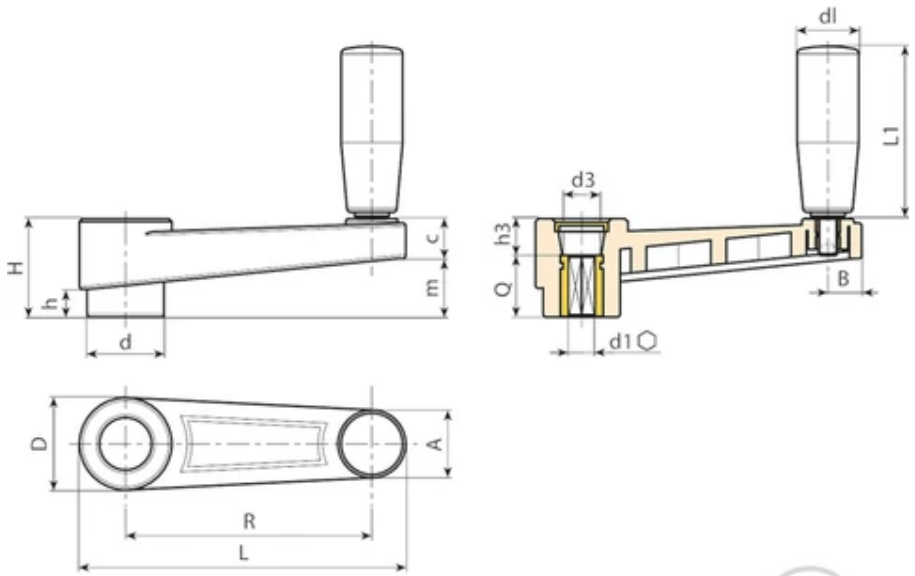


© Copyright
Boteco srl Unipersonale

| ⍰⍰ | Art. | L | R | H | D | d | m | c | A | B | h | d3 | h3 | d1 H10 | Q | dl | L1 |
|---|---|---|---|---|---|---|---|---|---|---|---|---|---|---|---|---|---|
| E232065.0001 | E232065.TE0601P | 89 | 65 | 30 | 27,5 | 22 | 17 | 13 | 20 | 9,5 | 8 | 14,5 | 10 | 6 | 20 | 20 | 52 |
| E232065.0002 | E232065.TE0801P | 89 | 65 | 30 | 27,5 | 22 | 17 | 13 | 20 | 9,5 | 8 | 14,5 | 10 | 8 | 20 | 20 | 52 |
| E232080.0001 | E232080.TE1001P | 107 | 80 | 33,5 | 32 | 26 | 20,5 | 13 | 23 | 11 | 9 | 19,5 | 9,5 | 10 | 24 | 20 | 52 |
| E232080.0002 | E232080.TE1201P | 107 | 80 | 33,5 | 32 | 26 | 20,5 | 13 | 23 | 11 | 9 | 19,5 | 9,5 | 12 | 24 | 20 | 52 |
| E232110.0001 | E232110.TE1201P | 140 | 110 | 39 | 35 | 29 | 22 | 14 | 24 | 12 | 11 | 19,5 | 11 | 12 | 28 | 23,5 | 63 |
| E232110.0002 | E232110.TE1401P | 140 | 110 | 39 | 35 | 29 | 22 | 14 | 24 | 12 | 11 | 19,5 | 11 | 14 | 28 | 23,5 | 63 |
| E232140.0001 | E232140.TE1401P | 175 | 140 | 49 | 44 | 35,5 | 32 | 17 | 27 | 13 | 15,5 | 24 | 19 | 14 | 30 | 25 | 72 |
| E232140.0002 | E232140.TE1601P | 175 | 140 | 49 | 44 | 35,5 | 32 | 17 | 27 | 13 | 15,5 | 24 | 19 | 16 | 30 | 25 | 72 |
| E232185.0001 | E232185.TE1601P | 223 | 185 | 55 | 47,5 | 40 | 38,5 | 16,5 | 27 | 14 | 17 | 29,5 | 21 | 16 | 34 | 26 | 82 |
| E232185.0002 | E232185.TE1701P | 223 | 185 | 55 | 47,5 | 40 | 38,5 | 16,5 | 27 | 14 | 17 | 29,5 | 21 | 17 | 34 | 26 | 82 |

| ⍰⍰ | Art. | ⍰⍰(g) |
|---|---|---|
| E232065.0001 | E232065.TE0601P | 101 |
| E232065.0002 | E232065.TE0801P | 98 |
| E232080.0001 | E232080.TE1001P | 120 |
| E232080.0002 | E232080.TE1201P | 118 |
| E232110.0001 | E232110.TE1201P | 167 |
| E232110.0002 | E232110.TE1401P | 163 |
| E232140.0001 | E232140.TE1401P | 257 |
| E232140.0002 | E232140.TE1601P | 252 |
| E232185.0001 | E232185.TE1601P | 390 |

| ?? | Art. | ??(g) |
| --- | --- | --- |
| E232185.0002 | E232185.TE1701P | 390 |

# E240

+135° -30° | PA6 +G.F. | RoHS COMPLIANT

## 05 □□□ □□ / □□ □, □□ & □□ □□

Crank handles with hexagonal hole/stud

**□□:**

□□ □□□□□.

□□□ □□□□ □□.

**□□ □□:**

□□□□ (□□□ □□ □□□□).

**□□:**

□□ (RAL 9011).

**□□ □:**

□□ □□□□□ (polyamide) (RAL 7035 cod. 13).

**□ □□:**

□□□□: (RAL 2004 cod. 02).

□□ (RAL 3000 cod. 16).

□□ (RAL 5015 cod. 07).

□□ (RAL 6024 cod. 17).

□□ (RAL 1021 cod. 10).

□□ (RAL 9011 cod. 01).

**□□□:**

□□□ □□ □□□ □□ □□ (□□ □□ □□□ □□ □□, □□ □□ H10).

**□□□ □□□:**

□□ □□ □□ □□.

**□□□ □□:**

□□ & □□ □□ M136.

**□□ □□ □□:**

□□ □□ □□ □□□, □□ □□□ □□ □□ □□ □□□ □□ □□.

□□ □ □ □□ □□ □□ □ □□□ □□□ □□□□ □□ □□□□□.

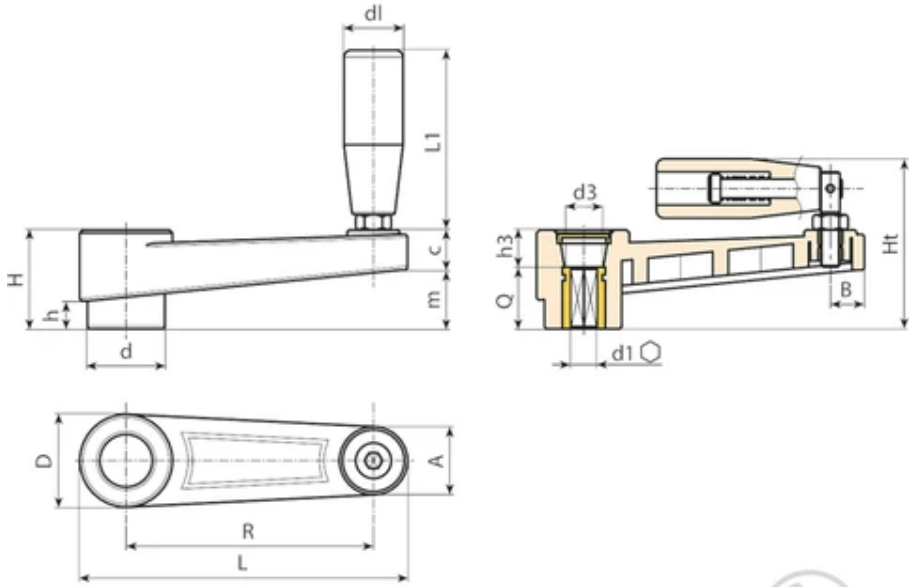


© Copyright
Boteco srl Unipersonale

| ?? | Art. | L | R | H | Ht | D | d | m | c | A | B | h | d3 | h3 | d1 H10 | Q | dl |
|---|---|---|---|---|---|---|---|---|---|---|---|---|---|---|---|---|---|
| E240065.0001 | E240065.TE0601P | 88,5 | 65 | 30 | 55 | 27,5 | 22 | 17 | 13 | 20 | 9,5 | 8 | 14,5 | 10 | 6 | 20 | 20 |
| E240065.0002 | E240065.TE0801P | 88,5 | 65 | 30 | 55 | 27,5 | 22 | 17 | 13 | 20 | 9,5 | 8 | 14,5 | 10 | 8 | 20 | 20 |
| E240080.0001 | E240080.TE1001P | 107 | 80 | 33,5 | 58 | 32 | 26 | 20,5 | 13 | 23 | 11 | 9 | 19,5 | 9,5 | 10 | 24 | 20 |
| E240080.0002 | E240080.TE1201P | 107 | 80 | 33,5 | 58 | 32 | 26 | 20,5 | 13 | 23 | 11 | 9 | 19,5 | 9,5 | 12 | 24 | 20 |
| E240110.0001 | E240110.TE1201P | 140 | 110 | 39 | 68 | 35 | 29 | 25 | 14 | 24 | 12 | 11 | 19,5 | 11 | 12 | 28 | 23,5 |
| E240110.0002 | E240110.TE1401P | 140 | 110 | 39 | 68 | 35 | 29 | 25 | 14 | 24 | 12 | 11 | 19,5 | 11 | 14 | 28 | 23,5 |
| E240140.0001 | E240140.TE1401P | 175 | 140 | 49 | 84 | 44 | 35,5 | 32 | 17 | 27 | 13 | 15,5 | 24 | 19 | 14 | 30 | 26 |
| E240140.0002 | E240140.TE1601P | 175 | 140 | 49 | 84 | 44 | 35,5 | 32 | 17 | 27 | 13 | 15,5 | 24 | 19 | 16 | 30 | 26 |
| E240185.0001 | E240185.TE1601P | 223 | 185 | 55 | 90 | 47,5 | 40 | 38,5 | 16,5 | 27 | 14 | 17 | 29,5 | 21 | 16 | 34 | 26 |
| E240185.0002 | E240185.TE1701P | 223 | 185 | 55 | 90 | 47,5 | 40 | 38,5 | 16,5 | 27 | 14 | 17 | 29,5 | 21 | 17 | 34 | 26 |

| ?? | Art. | L1 | ??(g) |
|---|---|---|---|
| E240065.0001 | E240065.TE0601P | 54 | 78 |
| E240065.0002 | E240065.TE0801P | 54 | 78 |
| E240080.0001 | E240080.TE1001P | 54 | 94 |
| E240080.0002 | E240080.TE1201P | 54 | 95 |
| E240110.0001 | E240110.TE1201P | 76 | 156 |
| E240110.0002 | E240110.TE1401P | 76 | 156 |
| E240140.0001 | E240140.TE1401P | 89 | 274 |
| E240140.0002 | E240140.TE1601P | 89 | 283 |
| E240185.0001 | E240185.TE1601P | 97 | 340 |

| ?? | Art. | L1 | ??(g) |
|---|---|---|---|
| E240185.0002 | E240185.TE1701P | 97 | 345 |

# E242

+135°
-30°

PA6
+G.F.

RoHS✓
COMPLIANT

## 05 ???? ?? / ?? ?, ?? ??

Crank handles with square hole

© Copyright
Boteco

**??:**

?? ?????.

???? ????? ??.

**?? ??:**

????? (??? ?? ?????).

**??:**

?? (RAL 9011).

**?? ?:**

?? ?????? (polyamide) (RAL 7035 cod. 13).

**? ??:**

????: (RAL 2004 cod. 02).

?? (RAL 3000 cod. 16).

?? (RAL 5015 cod. 07).

?? (RAL 6024 cod. 17).

?? (RAL 1021 cod. 10).

?? (RAL 9011 cod. 01).

**???:**

?? ?? ??? ??? ??? ?? ??? ?? ??(?? ?? H10).

**??? ???:**

?? ?? ?? ??.

**??? ??:**

?? & ?? ?? M136.

**?? ?? ??:**

?? ?? ?? ???, ?? ??? ?? ?? ?? ??? ?? ??.

?? ? ? ?? ?? ?? ? ??? ??? ????? ?? ??????.

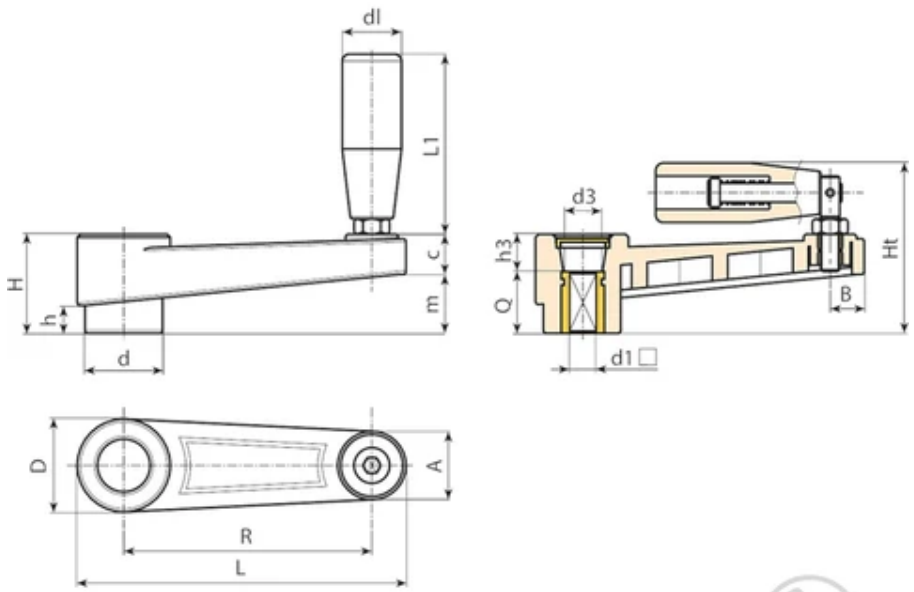


© Copyright
Boteco srl Unipersonale

| ?? | Art. | L | R | H | Ht | D | d | m | c | A | B | h | d3 | h3 | d1 H10 | Q | dl |
|---|---|---|---|---|---|---|---|---|---|---|---|---|---|---|---|---|---|
| E242065.0001 | E242065.TQ0801P | 88,5 | 65 | 30 | 55 | 27,5 | 22 | 17 | 13 | 20 | 9,5 | 8 | 14,5 | 10 | 8 | 20 | 20 |
| E242080.0001 | E242080.TQ1001P | 107 | 80 | 33,5 | 58 | 32 | 26 | 20,5 | 13 | 23 | 11 | 9 | 19,5 | 9,5 | 10 | 24 | 20 |
| E242110.0001 | E242110.TQ1201P | 140 | 110 | 39 | 68 | 35 | 29 | 25 | 14 | 24 | 12 | 11 | 19,5 | 11 | 12 | 28 | 23,5 |
| E242140.0001 | E242140.TQ1401P | 175 | 140 | 49 | 84 | 44 | 35,5 | 32 | 17 | 27 | 13 | 15,5 | 24 | 19 | 14 | 30 | 26 |
| E242185.0001 | E242185.TQ1701P | 223 | 185 | 55 | 90 | 47,5 | 40 | 38,5 | 16,5 | 27 | 14 | 17 | 29,5 | 21 | 17 | 34 | 26 |

| ?? | Art. | L1 | ??(g) |
|---|---|---|---|
| E242065.0001 | E242065.TQ0801P | 54 | 100 |
| E242080.0001 | E242080.TQ1001P | 54 | 110 |
| E242110.0001 | E242110.TQ1201P | 76 | 156 |
| E242140.0001 | E242140.TQ1401P | 89 | 240 |
| E242185.0001 | E242185.TQ1701P | 97 | 430 |

# E330

+135° -30° | PA6 +G.F. | RoHS COMPLIANT

## 05 ???? ?? / ?? ?, ?? ??

Crank handles with square hole

**??:**

?? ?????.

??? ???? ??.

**?? ??:**

???? (??? ?? ????).

**??:**

?? (RAL 9011).

**?? ?:**

?? ????? (polyamide) (RAL 7035 cod. 13).

**? ??:**

????: (RAL 2004 cod. 02).

?? (RAL 3000 cod. 16).

?? (RAL 5015 cod. 07).

?? (RAL 6024 cod. 17).

?? (RAL 1021 cod. 10).

?? (RAL 9011 cod. 01).

**???:**

?? ?? ??? ??? ??? ?? ??? ?? ??(?? ?? H10).

**??? ???:**

?? ?? ?? ??.

**??? ??:**

??? ??? ?? M144.

**?? ?? ??:**

?? ?? ?? ???, ?? ??? ?? ?? ?? ??? ?? ??.

?? ? ? ?? ?? ?? ? ??? ??? ???? ?? ?????.

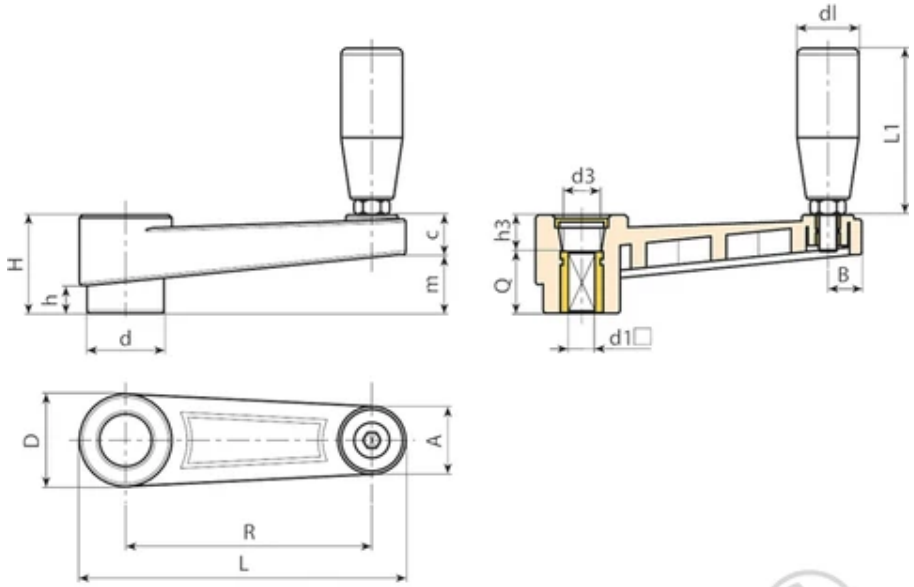


© Copyright
Boteco srl Unipersonale

| ⍰⍰ | Art. | L | R | H | D | d | m | c | A | B | h | d3 | h3 | d1 H10 | Q | dl | L1 |
|---|---|---|---|---|---|---|---|---|---|---|---|---|---|---|---|---|---|
| E330065.0001 | E330065.TQ0601P | 88,5 | 65 | 30 | 27,5 | 22 | 17 | 13 | 18 | 9,5 | 8 | 14,5 | 10 | 6 | 20 | 19 | 54 |
| E330065.0002 | E330065.TQ0801P | 88,5 | 65 | 30 | 27,5 | 22 | 17 | 13 | 18 | 9,5 | 8 | 14,5 | 10 | 8 | 20 | 19 | 54 |
| E330080.0002 | E330080.TQ1001P | 107 | 80 | 33,5 | 32 | 26 | 20,5 | 13 | 23 | 11 | 9 | 19,5 | 9,5 | 10 | 24 | 19 | 54 |
| E330110.0003 | E330110.TQ1201P | 140 | 110 | 39 | 35 | 29 | 25 | 14 | 24 | 12 | 11 | 19,5 | 11 | 12 | 28 | 21 | 66 |
| E330140.0001 | E330140.TQ1401P | 175 | 140 | 49 | 44 | 35,5 | 32 | 17 | 27 | 13 | 15,5 | 24 | 19 | 14 | 30 | 23,5 | 76 |
| E330185.0001 | E330185.TQ1701P | 223 | 185 | 55 | 47,5 | 40 | 38,5 | 16,5 | 27 | 14 | 17 | 29,5 | 21 | 17 | 34 | 25,5 | 87 |

| ⍰⍰ | Art. | ⍰⍰(g) |
|---|---|---|
| E330065.0001 | E330065.TQ0601P | 96 |
| E330065.0002 | E330065.TQ0801P | 92 |
| E330080.0002 | E330080.TQ1001P | 105 |
| E330110.0003 | E330110.TQ1201P | 152 |
| E330140.0001 | E330140.TQ1401P | 242 |
| E330185.0001 | E330185.TQ1701P | 385 |

# E331

+135° -30° | PA6 +G.F. | RoHS COMPLIANT

## 05 □□□ □□ / □□ □, □□ □□ M145

Crank handles with square hole

**□□:**

□□ □□□□□.

□□□ □□□□ □□.

**□□ □□:**

□□□□ (□□□ □□ □□□□).

**□□:**

□□ (RAL 9011).

**□□ □:**

□□ □□□□□ (polyamide) (RAL 7035 cod. 13).

**□ □□:**

□□□□: (RAL 2004 cod. 02).

□□ (RAL 3000 cod. 16).

□□ (RAL 5015 cod. 07).

□□ (RAL 6024 cod. 17).

□□ (RAL 1021 cod. 10).

□□ (RAL 9011 cod. 01).

**□□□:**

□□ □□ □□□ □□□ □□□ □□ □□□ □□ □□(□□ □□ H10).

**□□□ □□□:**

□□ □□ □□ □□.

**□□□ □□:**

□□ □□ □□ M145.

**□□ □□ □□:**

□□ □□ □□ □□□, □□ □□□ □□ □□ □□ □□□ □□ □□.

□□ □ □ □□ □□ □□ □ □□□ □□□ □□□□ □□ □□□□□.

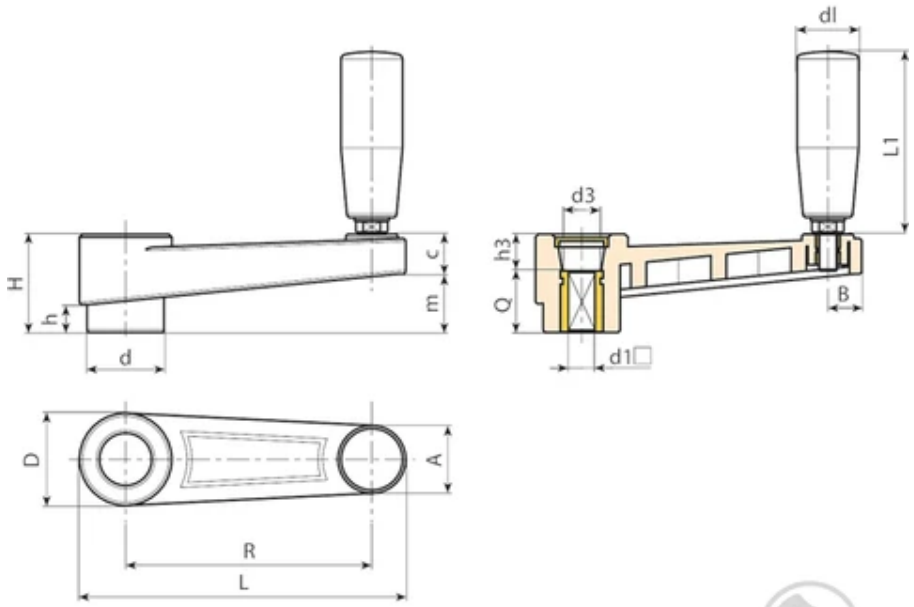


© Copyright
Boteco srl Unipersonale

| ⍰⍰ | Art. | L | R | H | D | d | m | c | A | B | h | d3 | h3 | d1 H10 | Q | dl | L1 |
|---|---|---|---|---|---|---|---|---|---|---|---|---|---|---|---|---|---|
| E331065.0002 | E331065.TQ0601P | 89 | 65 | 30 | 27,5 | 22 | 17 | 13 | 20 | 9,5 | 8 | 14,5 | 10 | 6 | 20 | 20 | 56 |
| E331065.0001 | E331065.TQ0801P | 89 | 65 | 30 | 27,5 | 22 | 17 | 13 | 20 | 9,5 | 8 | 14,5 | 10 | 8 | 20 | 20 | 56 |
| E331080.0001 | E331080.TQ1001P | 107 | 80 | 33,5 | 32 | 26 | 20,5 | 13 | 23 | 11 | 9 | 19,5 | 9,5 | 10 | 24 | 20 | 56 |
| E331110.0001 | E331110.TQ1201P | 140 | 110 | 39 | 35 | 29 | 25 | 14 | 24 | 12 | 11 | 19,5 | 11 | 12 | 28 | 23,5 | 68 |
| E331140.0001 | E331140.TQ1401P | 175 | 140 | 49 | 44 | 35,5 | 32 | 17 | 27 | 13 | 15,5 | 24 | 19 | 14 | 30 | 25 | 77 |
| E331185.0001 | E331185.TQ1701P | 223 | 185 | 55 | 47,5 | 40 | 38,5 | 16,5 | 27 | 14 | 17 | 29,5 | 21 | 17 | 34 | 26 | 86 |

| ⍰⍰ | Art. | ⍰⍰(g) |
|---|---|---|
| E331065.0002 | E331065.TQ0601P | 111 |
| E331065.0001 | E331065.TQ0801P | 117 |
| E331080.0001 | E331080.TQ1001P | 140 |
| E331110.0001 | E331110.TQ1201P | 177 |
| E331140.0001 | E331140.TQ1401P | 267 |
| E331185.0001 | E331185.TQ1701P | 400 |

# E332

+135°
-30°

PA6
+G.F.

RoHS✓
COMPLIANT

## 05 ???? ?? / ?? ?, ?? ?? M129

Crank handles with square hole

**??:**

?? ?????.

??? ???? ??.

**?? ??:**

???? (??? ?? ????).

**??:**

?? (RAL 9011).

**?? ?:**

?? ?????? (polyamide) (RAL 7035 cod. 13).

**? ??:**

????: (RAL 2004 cod. 02).

?? (RAL 3000 cod. 16).

?? (RAL 5015 cod. 07).

?? (RAL 6024 cod. 17).

?? (RAL 1021 cod. 10).

?? (RAL 9011 cod. 01).

**???:**

?? ?? ??? ??? ??? ?? ??? ?? ??(?? ?? H10).

**??? ???:**

?? ?? ?? ??.

**??? ??:**

??? ??: ?? ?? ?? M129.

**?? ?? ??:**

?? ?? ?? ???, ?? ??? ?? ?? ?? ??? ?? ??.

?? ? ? ?? ?? ?? ? ??? ??? ???? ?? ??????.

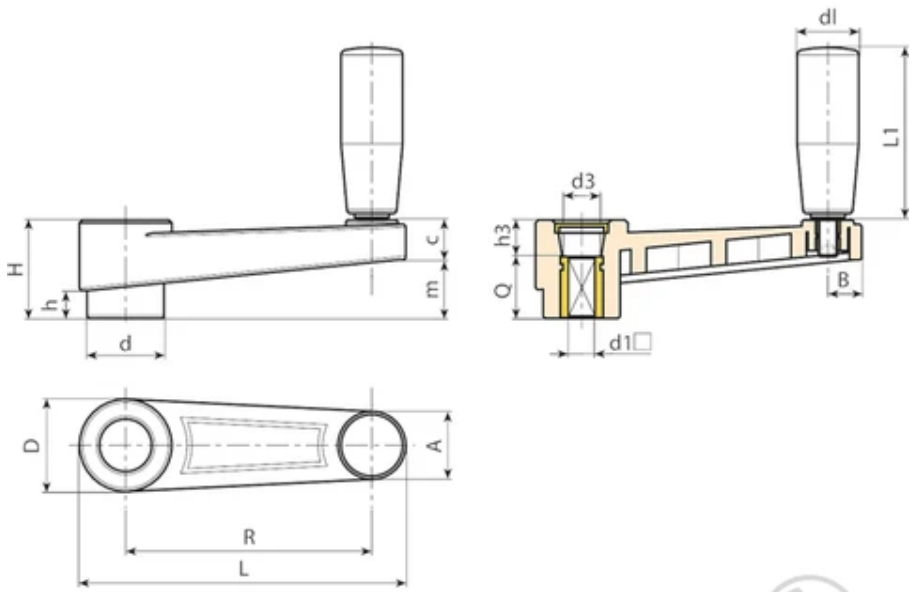


© Copyright
Boteco srl Unipersonale

| ⍰⍰ | Art. | L | R | H | D | d | m | c | A | B | h | d3 | h3 | d1 H10 | Q | dl | L1 |
|---|---|---|---|---|---|---|---|---|---|---|---|---|---|---|---|---|---|
| E332065.0003 | E332065.TQ0601P | 89 | 65 | 30 | 27,5 | 22 | 17 | 13 | 20 | 9,5 | 8 | 14,5 | 10 | 6 | 20 | 20 | 52 |
| E332065.0001 | E332065.TQ0801P | 89 | 65 | 30 | 27,5 | 22 | 17 | 13 | 20 | 9,5 | 8 | 14,5 | 10 | 8 | 20 | 20 | 52 |
| E332080.0001 | E332080.TQ1001P | 107 | 80 | 33,5 | 32 | 26 | 20,5 | 13 | 23 | 11 | 9 | 19,5 | 9,5 | 10 | 24 | 20 | 52 |
| E332110.0001 | E332110.TQ1201P | 140 | 110 | 39 | 35 | 29 | 22 | 14 | 24 | 12 | 11 | 19,5 | 11 | 12 | 28 | 23,5 | 63 |
| E332140.0003 | E332140.TQ1401P | 175 | 140 | 49 | 44 | 35,5 | 32 | 17 | 27 | 13 | 15,5 | 24 | 19 | 14 | 30 | 25 | 72 |
| E332185.0001 | E332185.TQ1701P | 223 | 185 | 55 | 47,5 | 40 | 38,5 | 16,5 | 27 | 14 | 17 | 29,5 | 21 | 17 | 34 | 26 | 82 |

| ⍰⍰ | Art. | ⍰⍰(g) |
|---|---|---|
| E332065.0003 | E332065.TQ0601P | 101 |
| E332065.0001 | E332065.TQ0801P | 107 |
| E332080.0001 | E332080.TQ1001P | 130 |
| E332110.0001 | E332110.TQ1201P | 167 |
| E332140.0003 | E332140.TQ1401P | 257 |
| E332185.0001 | E332185.TQ1701P | 390 |

# E511

+135°
-30°

PA6
+G.F.

RoHS
COMPLIANT

## 05 □□□ □□ / □ □□□, □□ □□ M145

Indexed crank handles

**□□:**

□□ □□□□□ □□, □□ □ □□□□ □□ □□□ □□□□□.

**□□ □□:**

□□□□ (□□□ □□ □□□□).

**□□:**

□□ (RAL 9011).

**□□□:**

□□ □□□□ □□(□□ □□ H10)□ □□ □□ □□ □□ □□□.

**□□□ □□□:**

□□ □□ □□ □□.

**□□□:**

□□□□□ □□ □□□ (AISI 302)

**□□ □□:**

□□ □□ □□ □□ / □□□ □□.

**□□□ □□:**

□□ □□ □□ M145.

**□□ □□ □□:**

□□ □ □□ □□ □□□ □□, □□□□ □□□ □□□ □□□ □□ □ □□□□.

□□ □ □□ □□ □□ □□ □, □□□ □□ □□□ □□□ □□□ □□□□ □□ □□□□□.

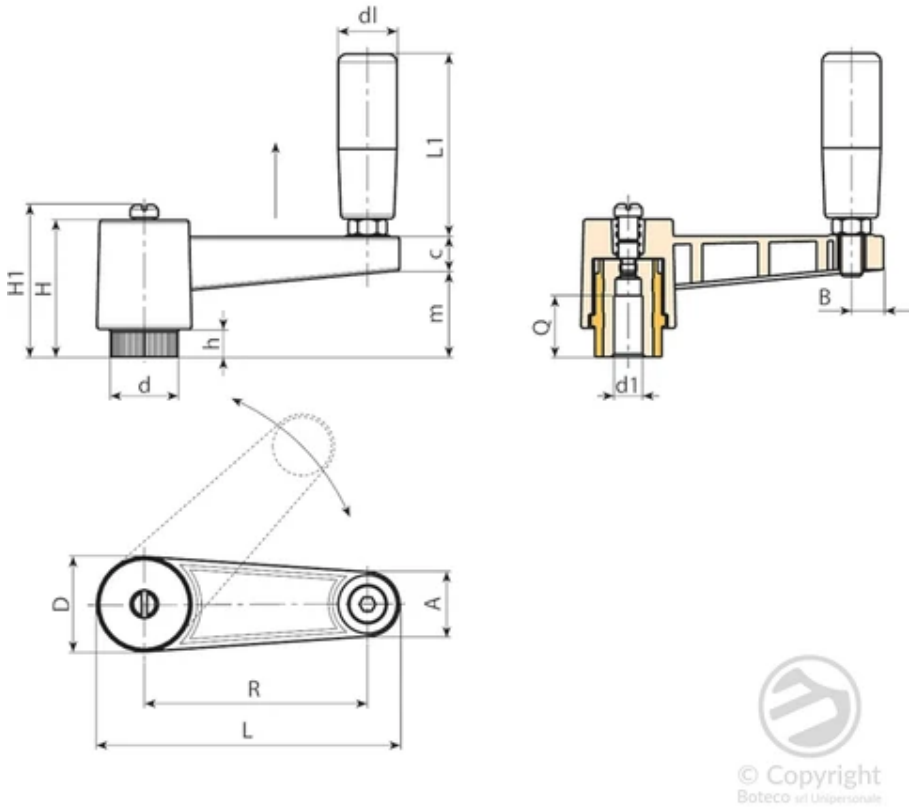


| ⍰⍰ | Art. | L | R | H | D | d | m | c | A | B | h | H1 | d1 H10 | Q | dl | L1 | ⍰⍰(g) |
|---|---|---|---|---|---|---|---|---|---|---|---|---|---|---|---|---|---|
| E511065.0001 | E511065.TP0501 | 88,5 | 65 | 46 | 27 | 19 | 30 | 13 | 17 | 9 | 10 | - | 5 | 22 | 20 | 56 | 92 |
| E511080.0001 | E511080.TP0501 | 109 | 80 | 50 | 34 | 24,5 | 33 | 13 | 22 | 12 | 11 | 54 | 5 | 28 | 23,5 | 68 | 187 |
| E511110.0001 | E511110.TP0501 | 139 | 110 | 50 | 34 | 24,5 | 33 | 13 | 22 | 12 | 11 | 54 | 5 | 28 | 23,5 | 68 | 205 |

# E513

+135°
-30°

PA6
+G.F.

RoHS
COMPLIANT

## 05 □□□ □□ / □□ □□□, □□ □□ M145

Indexed crank handles

**□□:**

□□ □□□□□ □□, □□ □ □□□□ □□ □□□ □□□□□.

**□□ □□:**

□□□□ (□□□ □□ □□□□).

**□□:**

□□ (RAL 9011).

**□□□:**

□□ □□ □□ □□□ / □□□□ □□ □(□□ 6H).

**□□□ □□□:**

□□ □□ □□ □□.

**□□□:**

□□□□□ □□ □□□ (AISI 302)

**□□ □□:**

□□ □□ □□ □□ / □□□ □□.

**□□□ □□:**

□□ □□ □□ M145.

**□□ □□ □□:**

□□ □ □□ □□ □□□ □□, □□□□ □□□ □□□ □□□ □□ □ □□□□.

□□ □ □□ □□ □□ □□ □, □□ □□□ □□□ □□□ □□□□ □□ □□□□□.

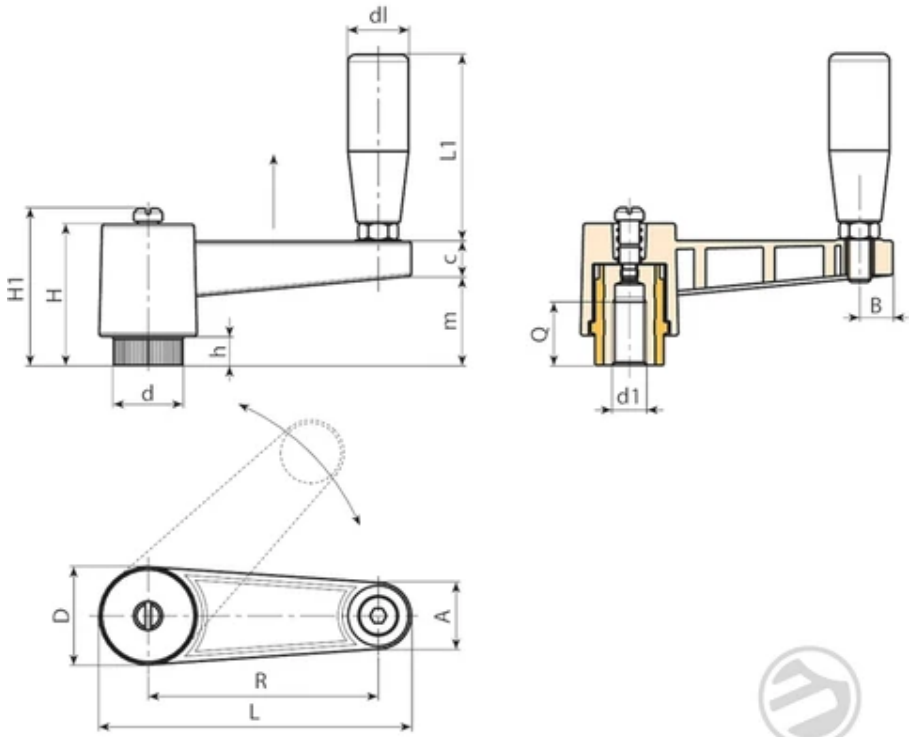


© Copyright
Boteco srl Unipersonale

| ⍰⍰ | Art. | L | R | H | D | d | m | c | A | B | h | H1 | d1 6H | Q | dl | L1 | ⍰⍰(g) |
|---|---|---|---|---|---|---|---|---|---|---|---|---|---|---|---|---|---|
| E513065.0001 | E513065.TM0801 | 88,5 | 65 | 46 | 27 | 19 | 30 | 13 | 17 | 9 | 10 | - | M8 | 18 | 20 | 56 | 96 |
| E513065.0002 | E513065.TM1001 | 88,5 | 65 | 46 | 27 | 19 | 30 | 13 | 17 | 9 | 10 | - | M10 | 18 | 20 | 56 | 92 |
| E513065.0003 | E513065.TM1201 | 88,5 | 65 | 46 | 27 | 19 | 30 | 13 | 17 | 9 | 10 | - | M12 | 18 | 20 | 56 | 91 |
| E513080.0001 | E513080.TM1201 | 109 | 80 | 50 | 34 | 24,5 | 33 | 13 | 22 | 12 | 11 | 54 | M12 | 22 | 23,5 | 68 | 177 |
| E513080.0002 | E513080.TM1401 | 109 | 80 | 50 | 34 | 24,5 | 33 | 13 | 22 | 12 | 11 | 54 | M14 | 22 | 23,5 | 68 | 179 |
| E513080.0003 | E513080.TM1601 | 109 | 80 | 50 | 34 | 24,5 | 33 | 13 | 22 | 12 | 11 | 54 | M16 | 22 | 23,5 | 68 | 169 |
| E513110.0001 | E513110.TM1201 | 139 | 110 | 50 | 34 | 24,5 | 33 | 13 | 22 | 12 | 11 | 54 | M12 | 22 | 23,5 | 68 | 196 |
| E513110.0002 | E513110.TM1401 | 139 | 110 | 50 | 34 | 24,5 | 33 | 13 | 22 | 12 | 11 | 54 | M14 | 22 | 23,5 | 68 | 200 |
| E513110.0003 | E513110.TM1601 | 139 | 110 | 50 | 34 | 24,5 | 33 | 13 | 22 | 12 | 11 | 54 | M16 | 22 | 23,5 | 68 | 205 |

# E516

+135°
-30°

PA6
+G.F.

RoHS
COMPLIANT

## 05 □□□ □□ / □ □□□, □□ □□ M129

Indexed crank handles

**□□:**

□□ □□□□□ □□, □□ □ □□□□ □□ □□□ □□□□□.

**□□ □□:**

□□□□ (□□□ □□ □□□□).

**□□:**

□□ (RAL 9011).

**□□□:**

□□ □□□□ □□(□□ □□ H10)□ □□ □□ □□ □□ □□□.

**□□□ □□□:**

□□ □□ □□ □□.

**□□□:**

□□□□□ □□ □□□ (AISI 302)

**□□ □□:**

□□ □□ □□ □□ / □□□ □□.

**□□□ □□:**

□□□ □□ : □□ □□ □□ M129.

**□□ □□ □□:**

□□ □ □□ □□ □□□ □□, □□□□ □□□ □□□ □□□ □□ □ □□□□.

□□ □ □□ □□ □□ □□ □, □□□ □□ □□□ □□□ □□□ □□□□ □□ □□□□□.

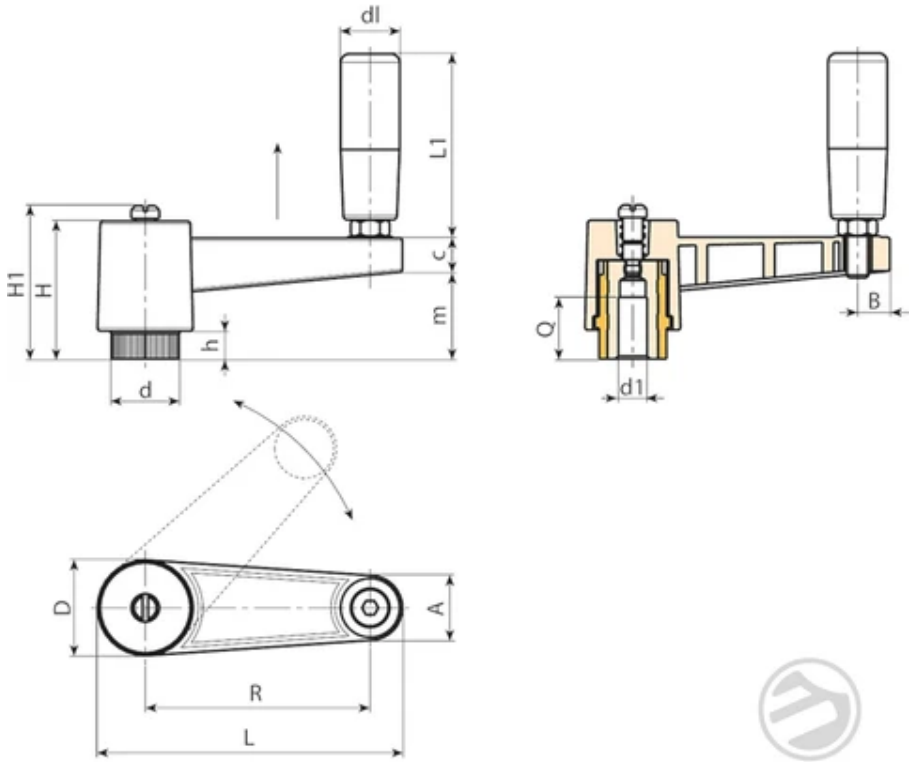


© Copyright
Boteco srl Unipersonale

| ⍰⍰ | Art. | L | R | H | D | d | m | c | A | B | h | H1 | d1 H10 | Q | dl | L1 | ⍰⍰(g) |
|---|---|---|---|---|---|---|---|---|---|---|---|---|---|---|---|---|---|
| E516065.0002 | E516065.TP0501 | 88,5 | 65 | 46 | 27 | 19 | 30 | 13 | 17 | 9 | 10 | - | 5 | 22 | 20 | 52 | 95 |
| E516080.0002 | E516080.TP0501 | 109 | 80 | 50 | 34 | 24,5 | 33 | 13 | 22 | 12 | 11 | 54 | 5 | 28 | 23,5 | 63 | 197 |
| E516110.0002 | E516110.TP0501 | 139 | 110 | 50 | 34 | 24,5 | 33 | 13 | 22 | 12 | 11 | 54 | 5 | 28 | 23,5 | 63 | 207 |

# E517

+135°
-30°

PA6
+G.F.

RoHS
COMPLIANT

## 05 □□□ □□ / □□ □□□, □□ □□ M129

Indexed crank handles

**□□:**

□□ □□□□□ □□, □□ □ □□□□ □□ □□□ □□□□□.

**□□ □□:**

□□□□ (□□□ □□ □□□□).

**□□:**

□□ (RAL 9011).

**□□□:**

□□ □□ □□ □□□ / □□□□ □□ □(□□ 6H).

**□□□ □□□:**

□□ □□ □□ □□.

**□□□:**

□□□□□ □□ □□□ (AISI 302)

**□□ □□:**

□□ □□ □□ □□ / □□□ □□.

**□□□ □□:**

□□□ □□ : □□ □□ □□ M129.

**□□ □□ □□:**

□□ □ □□ □□ □□□ □□, □□□□ □□□ □□□ □□□ □□ □ □□□□.

□□ □ □□ □□ □□ □□ □, □□□ □□ □□□ □□□ □□□ □□□□ □□ □□□□□.

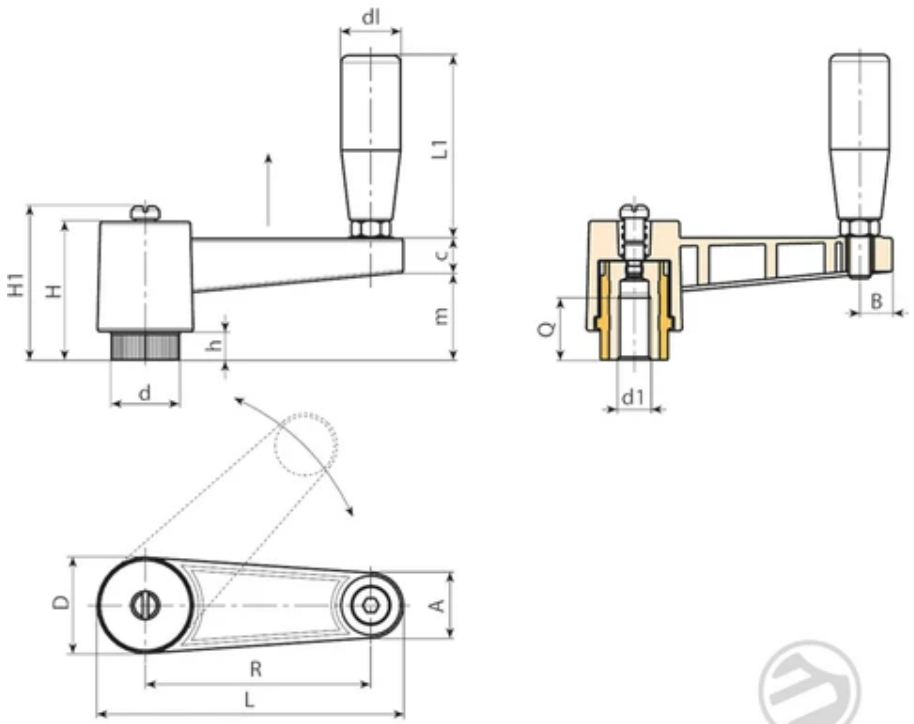


© Copyright
Boteco srl Unipersonale

| ⍰⍰ | Art. | L | R | H | D | d | m | c | A | B | h | H1 | d1 6H | Q | dl | L1 | ⍰⍰(g) |
|---|---|---|---|---|---|---|---|---|---|---|---|---|---|---|---|---|---|
| E517065.0001 | E517065.TM0801 | 88,5 | 65 | 46 | 27 | 19 | 30 | 13 | 20 | 9 | 10 | - | M8 | 18 | 20 | 52 | 106 |
| E517065.0002 | E517065.TM1001 | 88,5 | 65 | 46 | 27 | 19 | 30 | 13 | 20 | 9 | 10 | - | M10 | 18 | 20 | 52 | 102 |
| E517065.0003 | E517065.TM1201 | 88,5 | 65 | 46 | 27 | 19 | 30 | 13 | 20 | 9 | 10 | - | M12 | 18 | 20 | 52 | 102 |
| E517080.0001 | E517080.TM1201 | 109 | 80 | 50 | 34 | 24,5 | 33 | 13 | 23,5 | 12 | 11 | 54 | M12 | 22 | 23,5 | 63 | 187 |
| E517080.0002 | E517080.TM1401 | 109 | 80 | 50 | 34 | 24,5 | 33 | 13 | 23.5 | 12 | 11 | 54 | M14 | 22 | 23,5 | 63 | 189 |
| E517080.0003 | E517080.TM1601 | 109 | 80 | 50 | 34 | 24,5 | 33 | 13 | 23,5 | 12 | 11 | 54 | M16 | 22 | 23,5 | 63 | 179 |
| E517110.0001 | E517110.TM1201 | 139 | 110 | 50 | 34 | 24,5 | 33 | 13 | 23,5 | 12 | 11 | 54 | M12 | 22 | 23,5 | 63 | 206 |
| E517110.0002 | E517110.TM1401 | 139 | 110 | 50 | 34 | 24,5 | 33 | 13 | 23,5 | 12 | 11 | 54 | M14 | 22 | 23,5 | 63 | 198 |
| E517110.0003 | E517110.TM1601 | 139 | 110 | 50 | 34 | 24,5 | 33 | 13 | 23,5 | 12 | 11 | 54 | M16 | 22 | 23,5 | 63 | 196 |

# E518

+135°
-30°

PA6
+G.F.

RoHS
COMPLIANT

## 05 ??? ?? / ?? ???, ?? ??

Indexed crank handles

**??:**

?? ?????? ??. ?? ? ????? ?? ??? ??????.

**?? ??:**

????? (??? ?? ?????).

**??:**

?? (RAL 9011).

**???:**

?? ?? ?? ??? / ????? ?? ?(?? 6H).

**??? ???:**

?? ?? ?? ??.

**???:**

?????? ?? ??? (AISI 302)

**?? ??:**

?? ?? ?? ?? / ??? ??.

**??? ??:**

??? ??? ?? M144.

**?? ?? ??:**

?? ? ?? ?? ??? ??, ????? ??? ??? ??? ?? ? ????.

?? ? ?? ?? ?? ?? ?, ???? ?? ??? ??? ??? ????? ?? ??????.

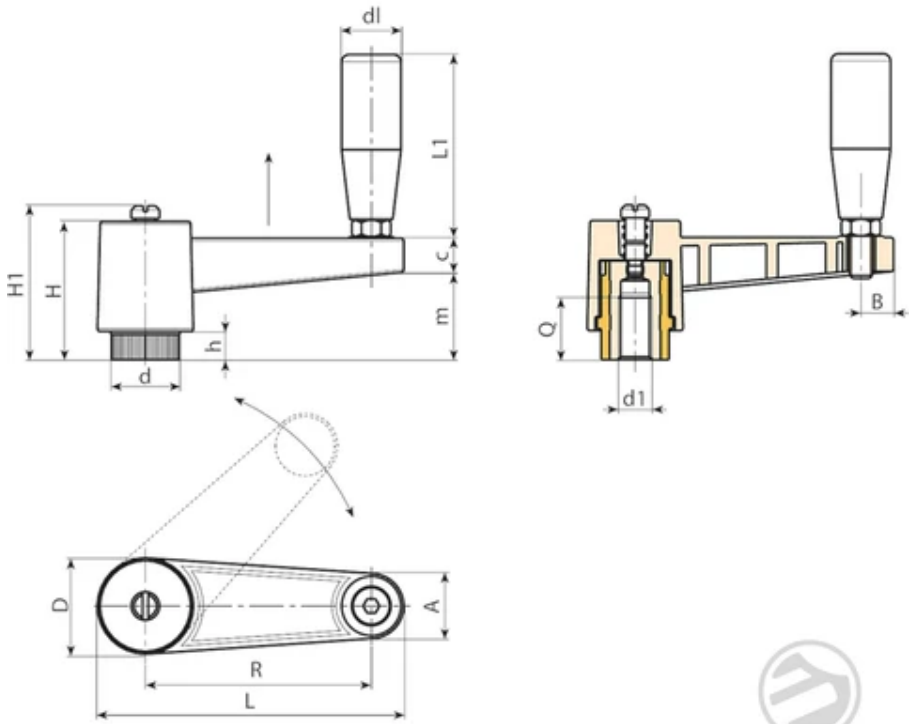


© Copyright
Boteco srl Unipersonale

| ?? | Art. | L | R | H | D | d | m | c | A | B | h | H1 | d1 6H | Q | dl | L1 | ??(g) |
|---|---|---|---|---|---|---|---|---|---|---|---|---|---|---|---|---|---|
| E518065.0001 | E518065.TM0801 | 88,5 | 65 | 46 | 27 | 19 | 30 | 13 | 17 | 9 | 10 | - | M8 | 18 | 19 | 54 | 94 |
| E518065.0002 | E518065.TM1001 | 88,5 | 65 | 46 | 27 | 19 | 30 | 13 | 17 | 9 | 10 | - | M10 | 18 | 19 | 54 | 90 |
| E518065.0003 | E518065.TM1201 | 88,5 | 65 | 46 | 27 | 19 | 30 | 13 | 17 | 9 | 10 | - | M12 | 18 | 19 | 54 | 90 |
| E518080.0001 | E518080.TM1201 | 109 | 80 | 50 | 34 | 24,5 | 33 | 13 | 22 | 12 | 11 | 54 | M12 | 22 | 21 | 66 | 172 |
| E518080.0002 | E518080.TM1401 | 109 | 80 | 50 | 34 | 24,5 | 33 | 13 | 22 | 12 | 11 | 54 | M14 | 22 | 21 | 66 | 164 |
| E518080.0003 | E518080.TM1601 | 109 | 80 | 50 | 34 | 24,5 | 33 | 13 | 22 | 12 | 11 | 54 | M16 | 22 | 21 | 66 | 154 |
| E518110.0001 | E518110.TM1201 | 139 | 110 | 50 | 34 | 24,5 | 33 | 13 | 22 | 12 | 11 | 54 | M12 | 22 | 21 | 66 | 181 |
| E518110.0002 | E518110.TM1401 | 139 | 110 | 50 | 34 | 24,5 | 33 | 13 | 22 | 12 | 11 | 54 | M14 | 22 | 21 | 66 | 195 |
| E518110.0003 | E518110.TM1601 | 139 | 110 | 50 | 34 | 24,5 | 33 | 13 | 22 | 12 | 11 | 54 | M16 | 22 | 21 | 66 | 198 |

# E519

+135°
-30°

PA6
+G.F.

RoHS✓
COMPLIANT

## 05 □□□ □□ / □□ □□□, □□ & □□ □□

Indexed crank handles

© Copyright
Boteco all rights reserved

**□□:**

□□ □□□□□ □□, □□ □ □□□□ □□ □□□ □□□□□.

**□□ □□:**

□□□□ (□□□ □□ □□□□).

**□□:**

□□ (RAL 9011).

**□□□:**

□□ □□ □□ □□□ / □□□□ □□ □(□□ 6H).

**□□□ □□□:**

□□ □□ □□ □□.

**□□□:**

□□□□□ □□ □□□ (AISI 302)

**□□ □□:**

□□ □□ □□ □□ / □□□ □□.

**□□□ □□:**

□□ & □□ □□ M136.

**□□ □□ □□:**

□□ □ □□ □□ □□□ □□, □□□□ □□□ □□□ □□□ □□ □ □□□□.

□□ □ □□ □□ □□ □□ □, □□□ □□ □□□ □□□ □□□ □□□□ □□ □□□□□.

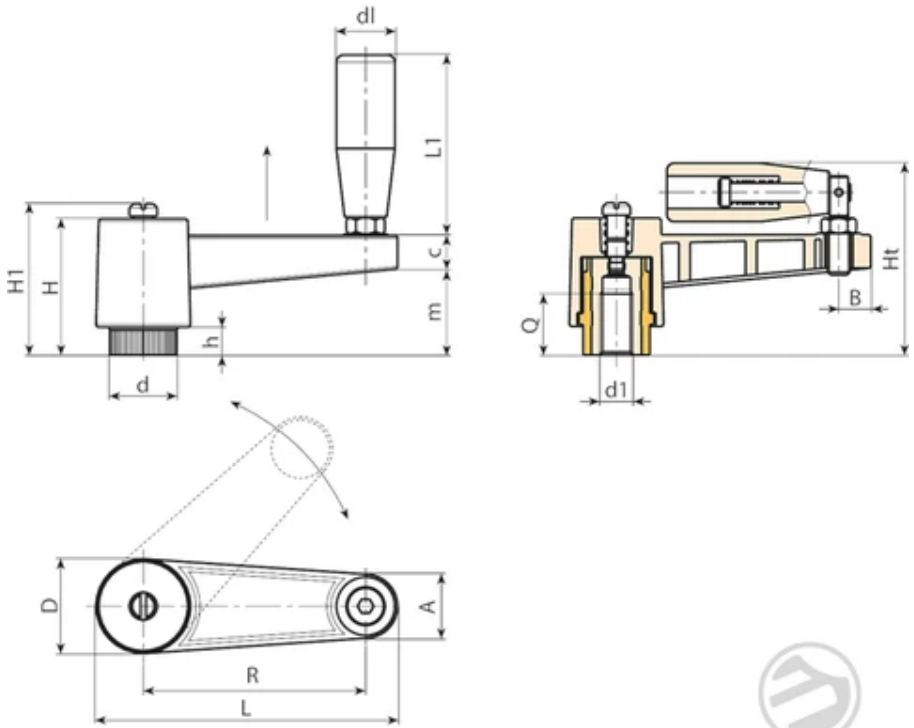


© Copyright
Boteco srl Unipersonale

| ?? | Art. | L | R | H | D | d | m | c | A | B | h | H1 | Ht | d1 6H | Q | dl | L1 |
|---|---|---|---|---|---|---|---|---|---|---|---|---|---|---|---|---|---|
| E519065.0001 | E519065.TM0801 | 87,5 | 65 | 46 | 27 | 19 | 30 | 13 | 17 | 9 | 10 | - | 67,5 | M8 | 18 | 20 | 54 |
| E519065.0002 | E519065.TM1001 | 87,5 | 65 | 46 | 27 | 19 | 30 | 13 | 17 | 9 | 10 | - | 67,5 | M10 | 18 | 20 | 54 |
| E519065.0003 | E519065.TM1201 | 87,5 | 65 | 46 | 27 | 19 | 30 | 13 | 17 | 9 | 10 | - | 67,5 | M12 | 18 | 20 | 54 |
| E519080.0002 | E519080.TM1201 | 109 | 80 | 50 | 34 | 24,5 | 33 | 13 | 22 | 12 | 11 | 54 | 75 | M12 | 22 | 23,5 | 76 |
| E519080.0003 | E519080.TM1401 | 109 | 80 | 50 | 34 | 24,5 | 33 | 13 | 22 | 12 | 11 | 54 | 75 | M14 | 22 | 23,5 | 76 |
| E519080.0004 | E519080.TM1601 | 109 | 80 | 50 | 34 | 24,5 | 33 | 13 | 22 | 12 | 11 | 54 | 75 | M16 | 22 | 23,5 | 76 |
| E519110.0002 | E519110.TM1201 | 139 | 110 | 50 | 34 | 24,5 | 33 | 13 | 22 | 12 | 11 | 54 | 75 | M12 | 22 | 23,5 | 76 |
| E519110.0003 | E519110.TM1401 | 139 | 110 | 50 | 34 | 24,5 | 33 | 13 | 22 | 12 | 11 | 54 | 75 | M14 | 22 | 23,5 | 76 |
| E519110.0004 | E519110.TM1601 | 139 | 110 | 50 | 34 | 24,5 | 33 | 13 | 22 | 12 | 11 | 54 | 75 | M16 | 22 | 23,5 | 76 |

| ?? | Art. | ??(g) |
|---|---|---|
| E519065.0001 | E519065.TM0801 | 104 |
| E519065.0002 | E519065.TM1001 | 102 |
| E519065.0003 | E519065.TM1201 | 100 |
| E519080.0002 | E519080.TM1201 | 185 |
| E519080.0003 | E519080.TM1401 | 180 |
| E519080.0004 | E519080.TM1601 | 174 |
| E519110.0002 | E519110.TM1201 | 199 |
| E519110.0003 | E519110.TM1401 | 220 |
| E519110.0004 | E519110.TM1601 | 225 |

# E520

+135°
-30°

PA6
+G.F.

RoHS✓
COMPLIANT

## 05 □□□ □□ / □ □□□, □□ □□

Indexed crank handles

**□□:**

□□ □□□□□ □□, □□ □ □□□□ □□ □□□ □□□□□.

**□□ □□:**

□□□□ (□□□ □□ □□□□).

**□□:**

□□ (RAL 9011).

**□□□:**

□□ □□□□ □□(□□ □□ H10)□ □□ □□ □□ □□ □□□.

**□□□ □□□:**

□□ □□ □□ □□.

**□□□:**

□□□□□ □□ □□□ (AISI 302)

**□□ □□:**

□□ □□ □□ □□ / □□□ □□.

**□□□ □□:**

□□□ □□□ □□ M144.

**□□ □□ □□:**

□□ □ □□ □□ □□□ □□, □□□□ □□□ □□□ □□□ □□ □ □□□□.

□□ □ □□ □□ □□ □□ □, □□ □□□ □□□ □□□ □□□□ □□ □□□□□.

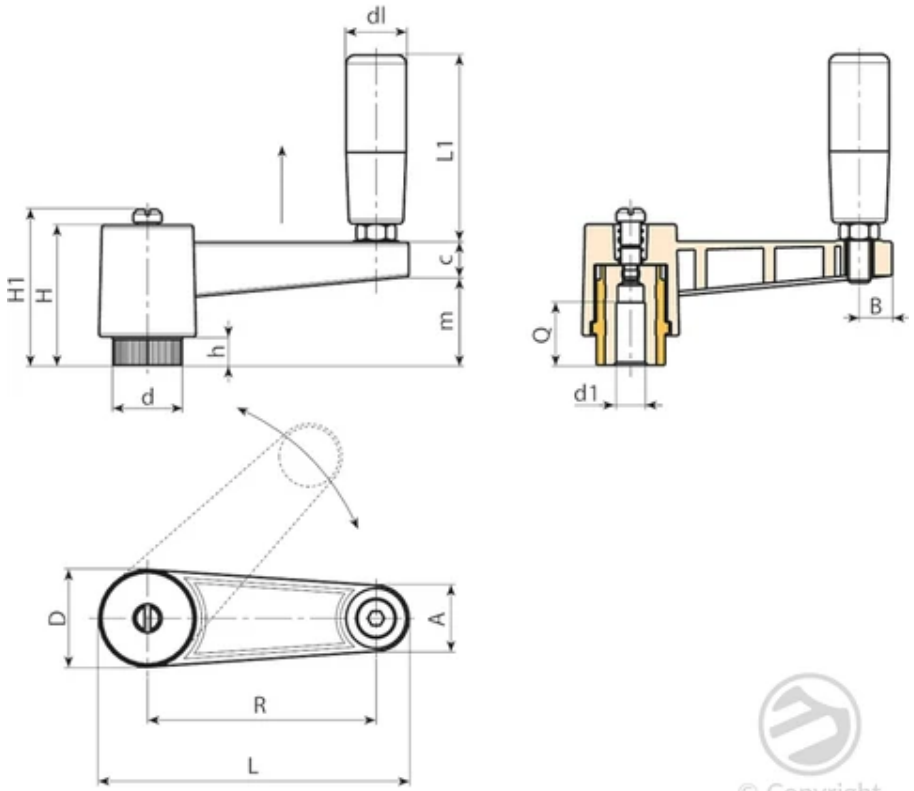


© Copyright
Boteco srl Unipersonale

| ?? | Art. | L | R | H | D | d | m | c | A | B | h | H1 | d1 H10 | Q | dl | L1 | ??(g) |
|---|---|---|---|---|---|---|---|---|---|---|---|---|---|---|---|---|---|
| E520065.0003 | E520065.TP0501 | 88,5 | 65 | 46 | 27 | 19 | 29 | 13 | 17 | 9 | 10 | - | 5 | 22 | 19 | 54 | 83 |
| E520080.0006 | E520080.TP0501 | 109 | 80 | 50 | 34 | 24,5 | 33 | 13 | 22 | 12 | 11 | 54 | 5 | 28 | 21 | 66 | 177 |
| E520110.0004 | E520110.TP0501 | 139 | 110 | 50 | 34 | 24,5 | 33 | 13 | 22 | 12 | 11 | 54 | 5 | 28 | 21 | 66 | 200 |

# E521

+135°
-30°

PA6
+G.F.

RoHS✓
COMPLIANT

## 05 □□□ □□ / □ □□□, □□ & □□ □□

Indexed crank handles

**□□:**

□□ □□□□□ □□, □□ □ □□□□ □□ □□□ □□□□□.

**□□ □□:**

□□□□ (□□□ □□ □□□□).

**□□:**

□□ (RAL 9011).

**□□□:**

□□ □□□□ □□(□□ □□ H10)□ □□ □□ □□ □□ □□□.

**□□□ □□□:**

□□ □□ □□ □□.

**□□□:**

□□□□□ □□ □□□ (AISI 302)

**□□ □□:**

□□ □□ □□ □□ / □□□ □□.

**□□□ □□:**

□□ & □□ □□ M136.

**□□ □□ □□:**

□□ □ □□ □□ □□□ □□, □□□□ □□□ □□□ □□□ □□ □ □□□□.

□□ □ □□ □□ □□ □□ □, □□□ □□ □□□ □□□ □□□ □□□□ □□ □□□□□.

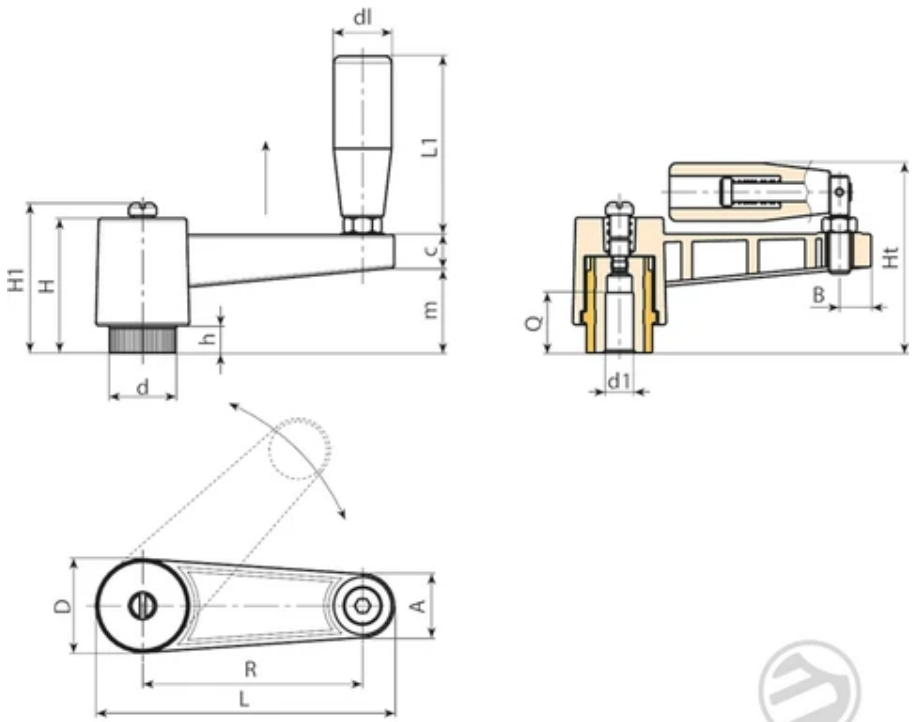


© Copyright
Boteco srl Unipersonale

| ?? | Art. | L | R | H | D | d | m | c | A | B | h | H1 | Ht | d1 H10 | Q | dl | L1 |
|---|---|---|---|---|---|---|---|---|---|---|---|---|---|---|---|---|---|
| E521065.0003 | E521065.TP0501 | 87,5 | 65 | 46 | 27 | 19 | 29 | 13 | 17 | 9 | 10 | - | 67,5 | 5 | 22 | 20 | 54 |
| E521080.0005 | E521080.TP0501 | 109 | 80 | 50 | 34 | 24,5 | 33 | 13 | 22 | 12 | 11 | 54 | 75 | 5 | 28 | 23,5 | 76 |
| E521110.0006 | E521110.TP0501 | 139 | 110 | 50 | 34 | 24,5 | 33 | 13 | 22 | 12 | 11 | 54 | 75 | 5 | 28 | 23,5 | 76 |

| ?? | Art. | ??(g) |
|---|---|---|
| E521065.0003 | E521065.TP0501 | 105 |
| E521080.0005 | E521080.TP0501 | 190 |
| E521110.0006 | E521110.TP0501 | 220 |