W296

+135° -30° | Al | PA6 +G.F. | RoHS COMPLIANT

03

????? ??? ?? ????? ?? ???

Metalline - Control handwheels

??:

????.

?? ??:

waiting_for_translation

??:

waiting_for_translation

?:

waiting_for_translation

? ??:

waiting_for_translation

?:

???? ?? ??, H7 ??? ????.

?? ??:

?? ???, ?? ?? ?? ?? ??? ???? ????? ??? ?? ??? ??????.

?? ?? ??:

?? ?, ??? ?? ??? ??, ?? ??? ?? ?? ??d1? ???? ??? ? ????.

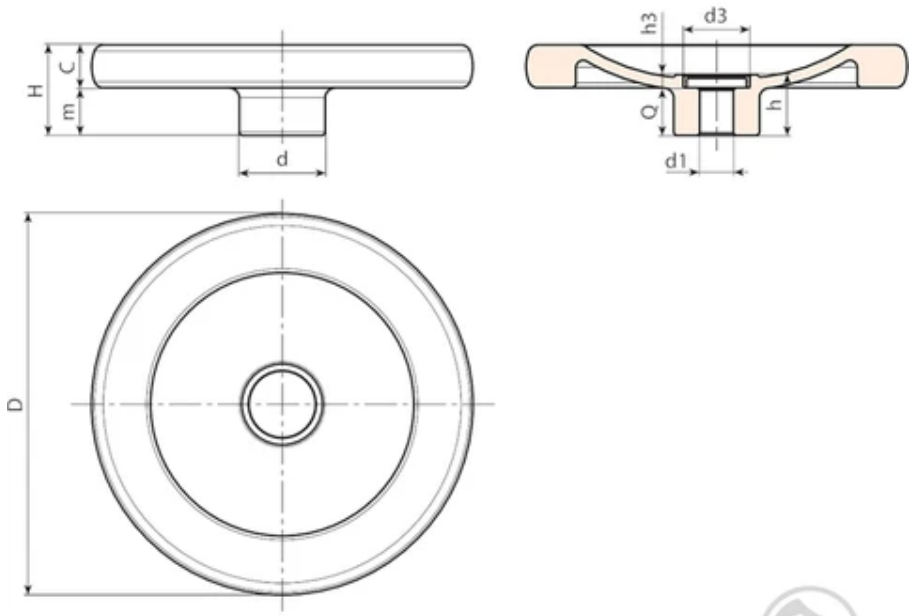

© Copyright
Boteco srl Unipersonale

□□	Art.	d	D	H	m	c	h	h3	d3	d1 H7	Q	□□(g)
W296080.0001	W296080.AD08H	25	80	26	14	12	21	5.5	20	8	15.5	142
W296100.0001	W296100.AD10H	28	100	28	14	14	21.5	5.5	20	10	16	240
W296130.0001	W296130.AD12H	36	130	35	19	16	25.5	5.5	28	12	20	435
W296160.0001	W296160.AD14H	36	160	38	20	18	25.5	5.5	28	14	20	685
W296200.0001	W296200.AD16H	42	200	44	24	20	31.5	6	34	16	25.5	1185

□□: □□50□□□□□□□d1□□□□□□□□□□(□□□H7).