F664

UPDATE | +135° -30° | PA6 +G.F. | RoHS COMPLIANT

06 VOLANTINO A 3 LOBI PIENO CON PERNO FILETTATO

3-lobe handwheels

??:

?? ?????.

???? ???? ??.

?? ??:

???? (??? ?? ????).

??:

?? (RAL 9011).

???:

?? ?? ?? ??? ???(??? ?? 6g).

??:

??? ??

?? ?? ??:

?? ?? ?? ???, ?? ?? ?? ?? ??? ??? ?? ??.

?? ? ?? ?? ??? ??, ???? ??? ??? ??? ?? ? ????.

?? ? ? ?? ?? ?? ? ??? ??? ???? ?? ????? (??: ?? ??? ??????).

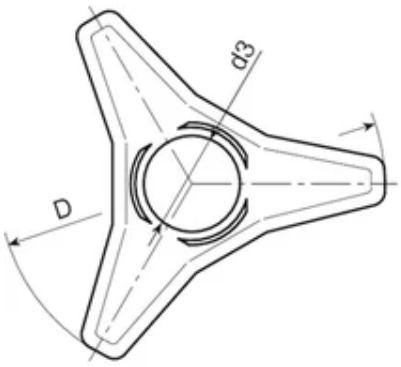

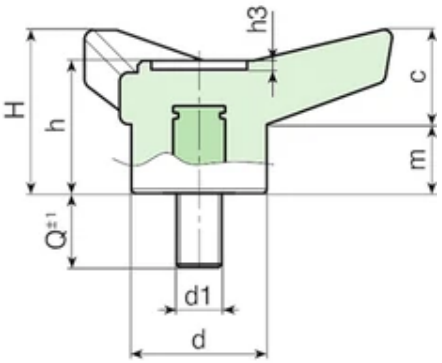

© Copyright
Boteco

??	art.	D	H	h	d	c	m	d3	h3	LM	d1 6g	Q	??(g)
F664045.0003	F664045.TM06X2001	45	21	18	16	11	10	11	1	60	M6	20	14
F664045.0005	F664045.TM06X3001	45	21	18	16	11	10	11	1	60	M6	30	17
F664045.0013	F664045.TM08X2001	45	21	18	16	11	10	11	1	60	M8	20	19
F664045.0015	F664045.TM08X2501	45	21	18	16	11	10	11	1	60	M8	25	20,5
F664045.0016	F664045.TM08X3001	45	21	18	16	11	10	11	1	60	M8	30	22
F664065.0005	F664065.TM08X2001	65	28	23.5	22	16.5	11.5	15.5	1.5	80	M8	20	36
F664065.0007	F664065.TM08X2501	65	28	23.5	22	16.5	11.5	15.5	1.5	80	M8	25	37,5
F664065.0009	F664065.TM08X3001	65	28	23.5	22	16.5	11.5	15.5	1.5	80	M8	30	39
F664065.0019	F664065.TM10X2001	65	28	23.5	22	16.5	11.5	15.5	1.5	80	M10	20	43
F664065.0026	F664065.TM10X3001	65	28	23.5	22	16.5	11.5	15.5	1.5	80	M10	30	47
F664065.0030	F664065.TM10X5001	65	28	23.5	22	16.5	11.5	15.5	1.5	80	M10	50	55
F664085.0002	F664085.TM08X2001	85	37	30.5	30	21	16	21	2	60	M8	20	61
F664085.0003	F664085.TM08X2501	85	37	30.5	30	21	16	21	2	60	M8	25	65
F664085.0004	F664085.TM08X3001	85	37	30.5	30	21	16	21	2	60	M8	30	69
F664085.0008	F664085.TM10X2501	85	37	30.5	30	21	16	21	2	60	M10	25	66
F664085.0009	F664085.TM10X3001	85	37	30.5	30	21	16	21	2	60	M10	30	74
F664085.0012	F664085.TM10X4001	85	37	30.5	30	21	16	21	2	60	M10	40	80
F664085.0016	F664085.TM12X2001	85	37	30.5	30	21	16	21	2	60	M12	20	83
F664085.0018	F664085.TM12X3001	85	37	30.5	30	21	16	21	2	60	M12	30	87
F664085.0019	F664085.TM12X4001	85	37	30.5	30	21	16	21	2	60	M12	40	94
F664105.0001	F664105.TM10X2001	105	45	37	35	26	19	25	2	80	M10	20	113
F664105.0002	F664105.TM10X3001	105	45	37	35	26	19	25	2	80	M10	30	116
F664105.0003	F664105.TM10X4001	105	45	37	35	26	19	25	2	80	M10	40	122
F664105.0006	F664105.TM12X3001	105	45	37	35	26	19	25	2	80	M12	30	121
F664105.0008	F664105.TM12X5001	105	45	37	35	26	19	25	2	80	M12	50	136
F664105.0012	F664105.TM14X5001	105	45	37	35	26	19	25	2	80	M14	50	152
F664125.0001	F664125.TM12X3001	126	54	44.5	42.5	31	23	28	1.5	100	M12	30	200
F664125.0004	F664125.TM14X3001	126	54	44.5	42.5	31	23	28	1.5	100	M14	30	219
F664125.0005	F664125.TM16X3001	126	54	44.5	42.5	31	23	28	1.5	100	M16	30	232

?? 150??? ??? ??? ???? ??? ????.
LM = ?? ??? ??.